DANA BREVINI® Motion Systems

DC1G1G1-0000000R3
07 2025

Product Catalog

Helical and Bevel Helical Gearboxes
Brevini EvoMax™ Series

Output torque up to 310.000 Nm

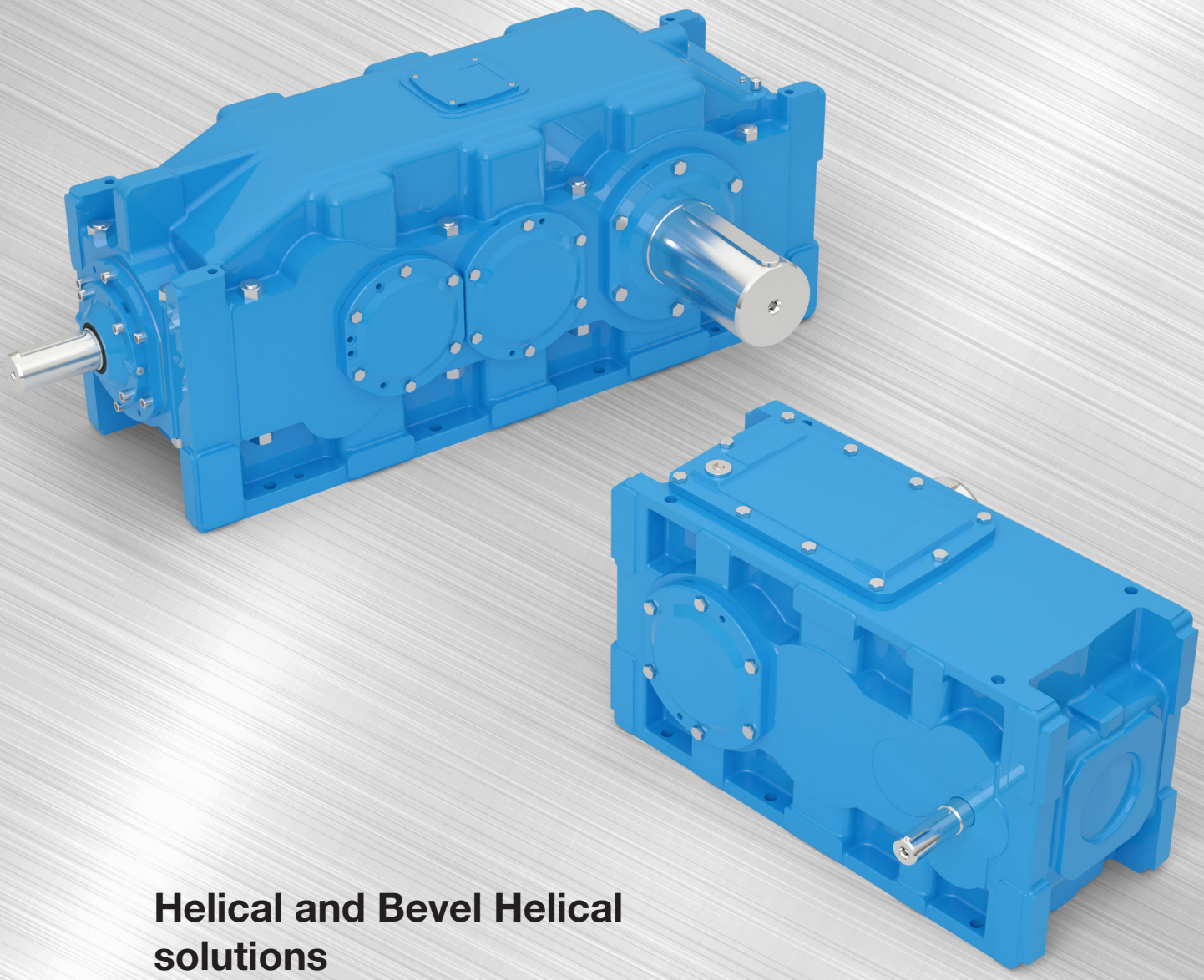

Helical and Bevel Helical solutions

The Brevini EvoMax™ gearboxes are designed for heavy duty application in mining, material handling and marine application. They ensure high performances in demanding applications based on their modularity and a wide range of combinations.

DANA

BREVINI®

Motion Systems

© 2025 Dana Limited. All rights reserved.
The product images and drawings shown are for illustration purposes only and may not be an exact representation of the product.
We reserve the right to change or modify our product specifications, configurations, or dimensions at any time without notice.

	Page
Technical description	4
Symbology	7
Gearbox concept	8
Housing surfaces	10
Shaft arrangement and sense of rotation	12
Designation for order	18
Gearbox selection	20
Radial and axial loads (enquiry form)	26
Application factor	27
Technical data summary - Monoblock housing	31
Technical data summary - Split housing	113
Overview of dimension drawings - Monoblock housing	203
Overview of dimension drawings - Split housing	233
Other dimensions	245
Optional housing holes	245
Housing variants	250
Motor bell housings	252
Tunnel bell housings with integrated fan	272
Hollow shaft with keyway	276
Hollow shaft with keyway and labyrinth	277
Hollow spline shaft	278
Hollow spline shaft with labyrinth	279
Hollow shaft with shrink disc	280
Hollow shaft with shrink disc and labyrinth	281
Solid spline shaft	282
Solid spline shaft with labyrinth	283
Flanged shafts	284
Double extended input shaft	285
Additional shaft	288
Double output shaft	289
Accessories	291
Other products	315
Conversion factors	316

Helical gears - bevel helical gears - compact gears

Brevini EvoMax™

The Brevini EvoMax™ gearbox series is a further development of the PIV Posired 2 from Dana Motion Systems Deutschland. The development has incorporated over 90 years of application knowledge and customer feedback and the outcome is a series of highly reliable, efficient and economical products.
The development of the Brevini EvoMax™ gearbox series enabled the improvement in torque density, smaller physical envelope, higher efficiency, lower weight, noise and power consumption. Overall, the modular design of the Brevini EvoMax™ series gives sustainable and efficient transmission that minimize operating costs and maximize availability.

The Dana Motion Systems Deutschland ISO 9001:2015 quality assurance system for design, development, production, assembly, and aftersales service guarantees a uniformly high World-class standard.

Brevini EvoMax™

is an "intelligent" transmission concept with advantages to customers including:

- Short delivery times due to a high degree of standardization
- Cost-efficient gear selection for every application due to better torque distribution between sizes.
- High product quality resulting from a more robust construction
- Greater product flexibility enables a wide range of uses
- Custom-made production based on a modular system.

Available Options:

- 2 to 4-stage helical gear units
- 3 to 4-stage bevel helical gear units
- 3 and 4-stage compact gear units
- 19 sizes based on the modular principle

Construction and Design:

- Horizontal, vertical and standing installation with attachment to all 6 housing surfaces
- Compact drives as bevel helical gear units
- Compact drives as bevel helical gear units with vertical output shafts

Output torques

T_{2N} from 8000 Nm to 310000 Nm

Ratios

i_N = 4 to 500 for spur gears
i_N = 9 to 500 for bevel-helical gear units
i_N > 500 by combining planetary gear units.

Housing:

The innovative housing of the Brevini EvoMax™ series have been developed using the latest calculation methods to ensure optimum stiffness and acoustics with minimal use of material.
The following versions are available

- Compact block housing for sizes 18 to 31
- Split housing for sizes 35 to 56

Housing Material:

- Standard is gray cast iron EN-GJL-250
- On request nodular cast iron EN-GJS-500-7
- On request nodular cast iron EN-GJS-400-18-LT
- Or steel-welded housing

Output Shaft Designs:

- Solid shaft with parallel key or splined according to DIN5480
- Hollow shaft with key splined, according to DIN5480 or shrink disk
- Flange shaft

Input Shaft Design:
- Solid shaft with key
- With helical gearboxes, double extended input shaft
- Extended intermediate shaft is available for all gearboxes.
- Keys according to DIN 6885/1 are included in the scope of delivery.
- Centering bores on the shaft ends are designed according to DIN 332 Form DS.

Gears
The Brevini EvoMax™ series uses helical gears and bevel gears with Cyclo-Palloid teeth. All gears are designed for optimum load-bearing behavior and to minimize noise. In our own hardening shop, the gears are case-hardened and then the profiles are ground with the necessary correction according to the design.

Bearing:
The dimensioning of the rolling bearing service life takes into account the high expectations of mechanical and plant engineering. Only bearings from premium manufacturers are used.

Seals:
Sealing systems available as standard for input and output shafts are:
- Radial shaft seals in various materials
- Radial shaft seals with additional dust lip,
- Second radial shaft seal with grease-filled chamber in between
- Grease-lubricated labyrinth seals also with radial shaft seals
- Non-contact seals

Maintenance cover with reusable seal.

Lubrication:
- Gears and roller bearings are splash lubricated as standard
- Standardized injection lubrication systems with shaft or motor pumps are optionally available
- Oil dipstick as the standard solution for horizontal gears
- Il sight glass as a standard solution for vertical gears

Cooling:
Additional cooling devices available as standard are:
- Mechanical or Electrical fan cooling
- Cooling coil (cartridge type)
- External oil-air cooler
- External oil-water cooler

Accessories:
Motors according to IEC, NEMA and other standards, three-phase drives with the required motor mountings are available as standard:
- Motor bell housings
- Motor swing base for shaft mounted applications
- Motor scoop
- Motor base plates fixed to gearbox housing
- Base-frame to accommodate the motor and gearbox

- Torque Arms – Available with one or two hinges on request.
- Backstops are available as standard and are easily accessible in a closed housing.
- Auxiliary drive with overrunning clutch.
- Flange on output for attachments (e.g. agitator lanterns).

Couplings:

At the output suitable for the series output shafts and gearbox torques:

- Flexible couplings
- Tooth couplings
- Barrel couplings
- Multi-disc clutches
- Other couplings on request

At the input, suitable for the series drive shafts and gearbox torques:

- Flexible couplings
- Fluid couplings
- Other couplings on request

Other Accessories:

- Heaters mounted from the outside
- Operating monitoring systems for speed, torque
- Indicators for temperature, oil flow, oil level etc.
- Sensor for bearing monitoring

General:

- Dimension sheets are available as CAD files for various IT systems and interfaces.
- Computer programs for drive selection.
- Gear, shaft and bearing verification.
- The degree of protection corresponds to IP 55.
- Information on the weight of the gear unit and the amount of gear oil are estimate values. Exact values can be found on the gear unit nameplate or technical description.
- The standard color is RAL 5012, other colors are available
- Protection covers and air guides painted in RAL 1003 (signal yellow)

Scope of delivery, installation and commissioning:

- The delivery takes place without oil filling.
- Transport aids such as eye bolts are not included.
- Oil type and oil quantity according to the nameplate or technical description
- Recommended quality: CLP according to DIN 51517 part 3 or see technical description.
- The standard preservation under normal transport and storage conditions is sufficient for a period of 18 months.
- Installation and commissioning according to Brevini Motion Systems operating instructions
- On request, we can supply the legally prescribed contact protection on rotating parts.
- Protective covers for the shrink disk are provided for hollow shaft gear units

Dimensions		
Symbol referring to gear unit type E2H, E3H, E4H	**Monoblock housing**	**Split Housing** Housing type 12 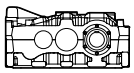 Housing type 11 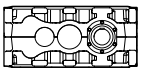
Symbol referring to gear unit type E3B, E4B	**Monoblock housing** 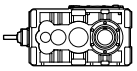	**Split Housing** Housing type 12 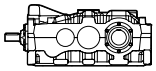 Housing type 11 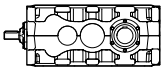
Symbol referring to gear unit type E3C, E4C	**Monoblock housing** 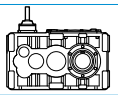	
Symbols identifying the gear unit stages (2, 3, 4)		
Symbols describing kind of output shaft: **V** = Solid shaft **VS** = Solid spline shaft **G** = Hollow shaft with shrink disc **H** = Hollow shaft with key **HS** = Hollow spline shaft **F** = Flanged shaft	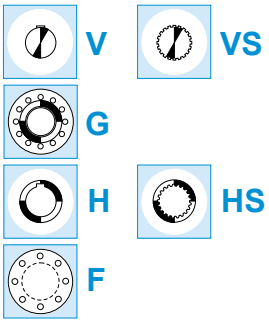	
Gear unit weight [kg]		
	Lubrification	
Oil quantity in liters [l]		
Type of oil plug on gear units		
Filling plug		
Oil level		
Oil drain		
Breather		

Reference to page	

MONOBLOCK HOUSING

MONOBLOCK HOUSING - SIZES FROM 18 TO 31				
Construction types	**Mounting positions**			
	R	**S**	**T**	**U** (on request)
	Horizontal, output shaft horizontal	Vertical, output shaft below	Vertical, output shaft above	Horizontal, output shaft vertical
E2H, E3H, E4H	**Helical gear units**			
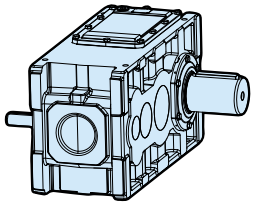	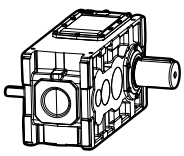	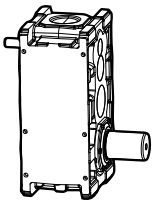	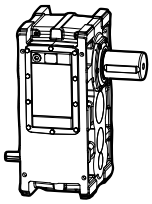	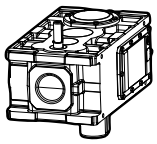
E3B, E4B	**Bevel-helical gear units**			
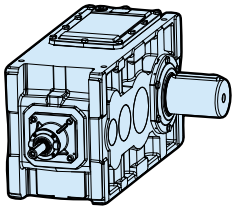	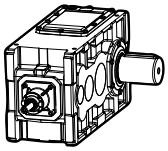	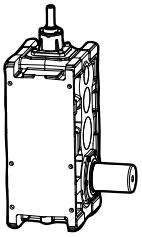	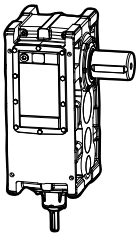	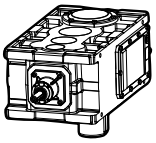
E3C, E4C	**Compact drives**			
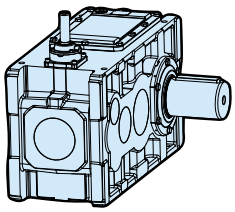	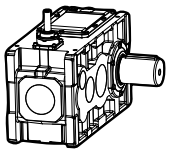	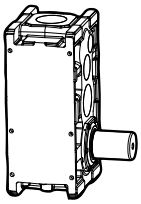	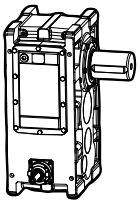	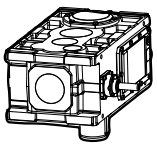

SPLIT HOUSING

SPLIT HOUSING - SIZES FROM 35 TO 56				
Construction types	**Mounting positions**			
	R	**S** (on request)	**T** (on request)	**U** (on request)
	Horizontal, output shaft horizontal	Vertical, output shaft below	Vertical, output shaft above	Horizontal, output shaft vertical
E2H, E3H, E4H	**Helical gear units**			
Housing type 12 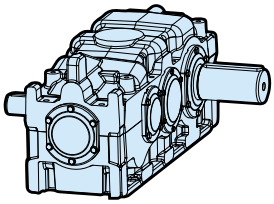	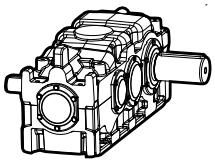	–	–	–
Housing type 11 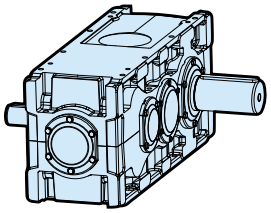	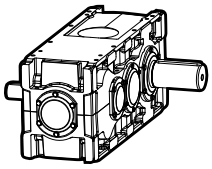	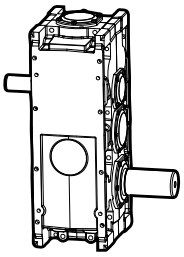	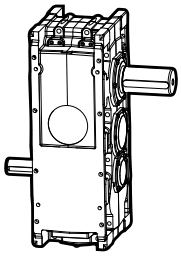	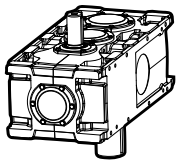
E3B, E4B	**Bevel-helical gear units**			
Housing type 12 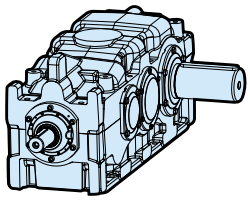	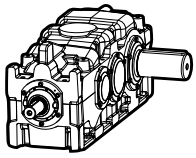	–	–	–
Housing type 11 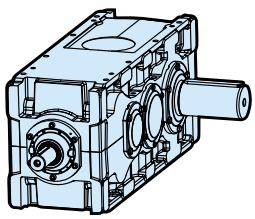	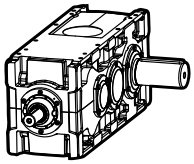	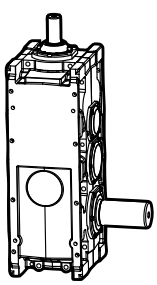	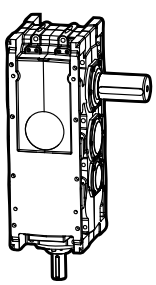	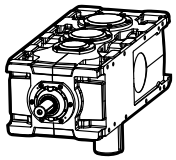

MONOBLOCK HOUSING

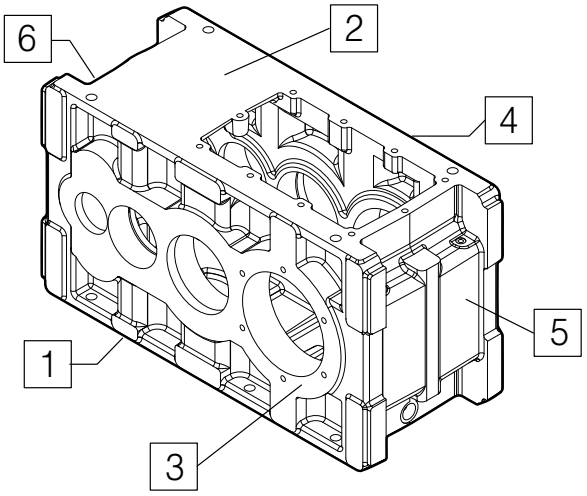

Designation of housing surfaces (1 … 6).
Permissible mounting positions: see dimension sheets.

Example:
R1 = R for horizontal mounting position; 1 for surface 1 below

Type	MONOBLOCK HOUSING - SIZE FROM 18 TO 31	Mounting positions and surfaces		Page
Helical gears	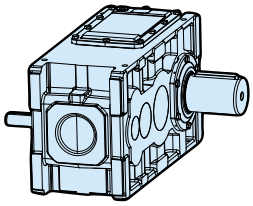	E2H	R1, R2, S5, T6, U3, U4	12
		E3H	R1, R2, S5, T6, U3, U4	
		E4H	R1, R2, S5, T6, U3, U4	
Bevel-helical gears	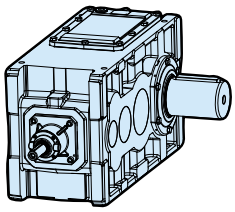	E3B	R1, R2, S5, T6, U3, U4	14
		E4B	R1, R2, S5, T6, U3, U4	
Compact gears	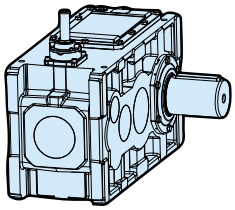	E3C E4C	R1	16
		E3C E4C	S5, T6, U3, U4	

SPLIT HOUSING

Housing type 12

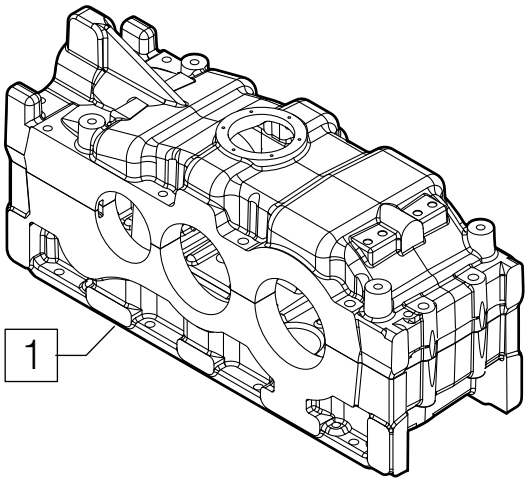

Housing type 11

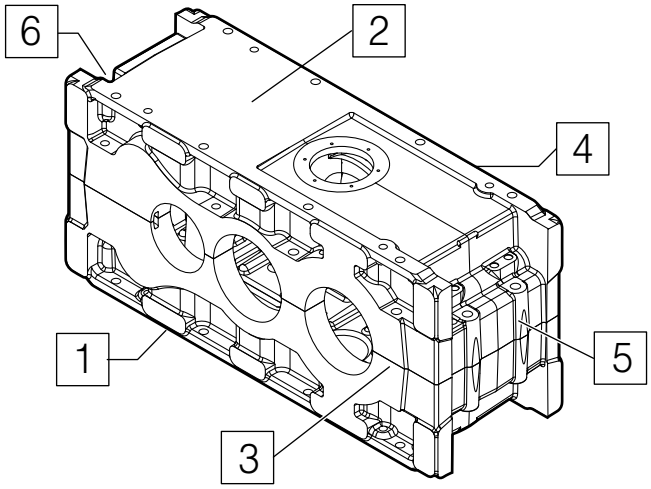

Designation of housing surfaces (1 … 6).
Permissible mounting positions: see dimension sheets.

Example:
R1 = R for horizontal mounting position; 1 for surface 1 below

Type	SPLIT HOUSING- SIZE FROM 35 TO 56	Mounting positions and surfaces			Page
			Housing type 12	Housing type 11 [1]	
Helical gears	Housing type 12 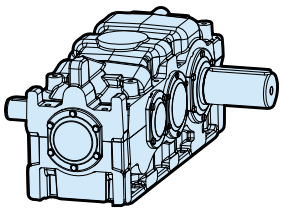 Housing type 11 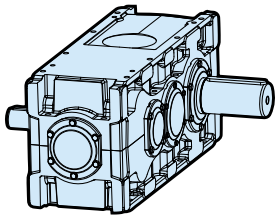	E2H	R1 R2	R1 R2 S5 T6 U3 U4	12
		E3H			
		E4H			
Bevel-helical gears	Housing type 12 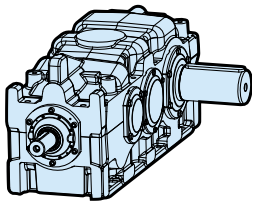 Housing type 11 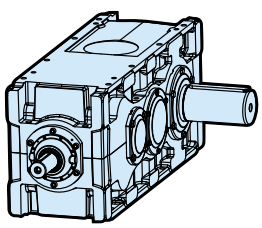	E3B	R1 R2	R1 R2 S5 T6 U3 U4	14
		E4B			

[1] S,T and U positions on request

SHAFT ARRANGEMENT AND SENSE OF ROTATION

E2H - E3H - E4H

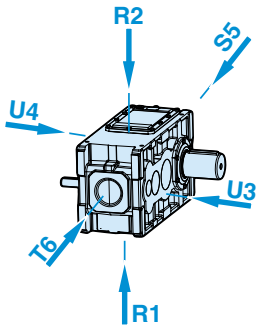

R1: Mounting positions and surface below

285

E2H - E3H - E4H

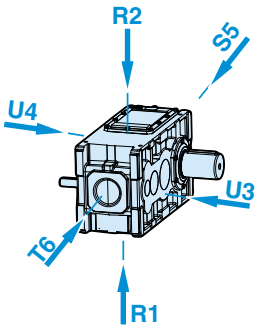

R1: Mounting positions and surface below

Input shafts
Output shafts
④ Backstop

292

SHAFT ARRANGEMENT AND SENSE OF ROTATION

E3B - E4B

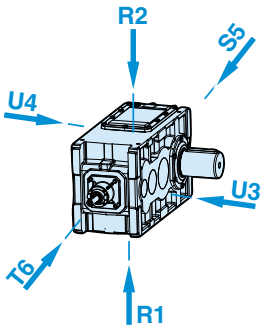

R1: Mounting positions and surface below

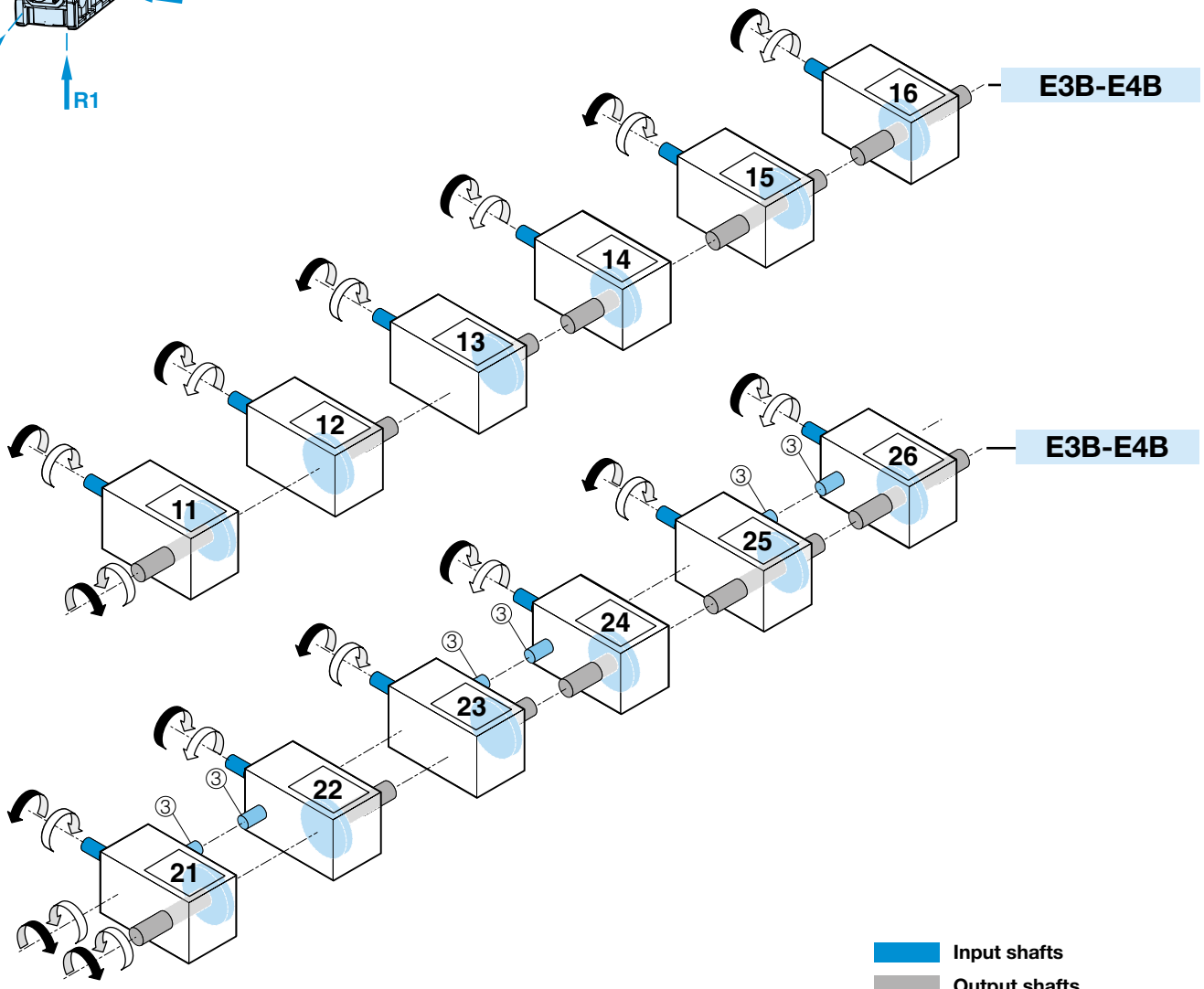

288

E3B - E4B

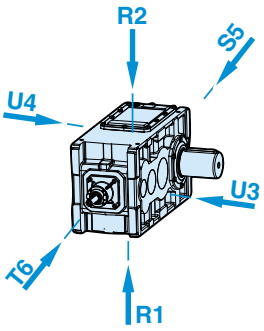

R1: Mounting positions and surface below

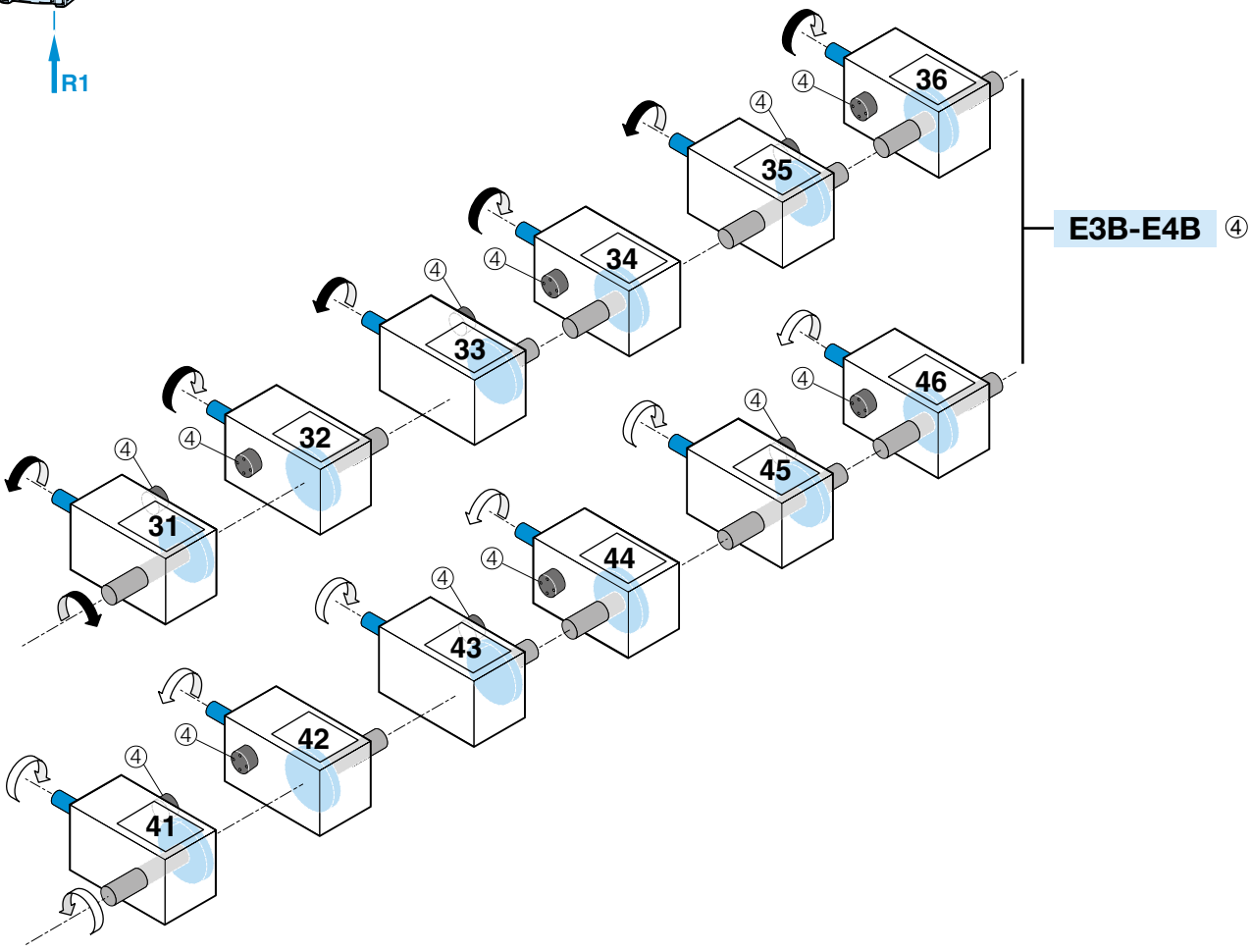

Input shafts
Output shafts
④ Backstop

293

SHAFT ARRANGEMENT AND SENSE OF ROTATION

E3C - E4C ...R1

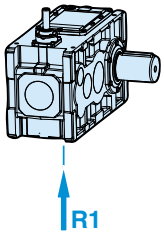

R1: Mounting positions and surface below

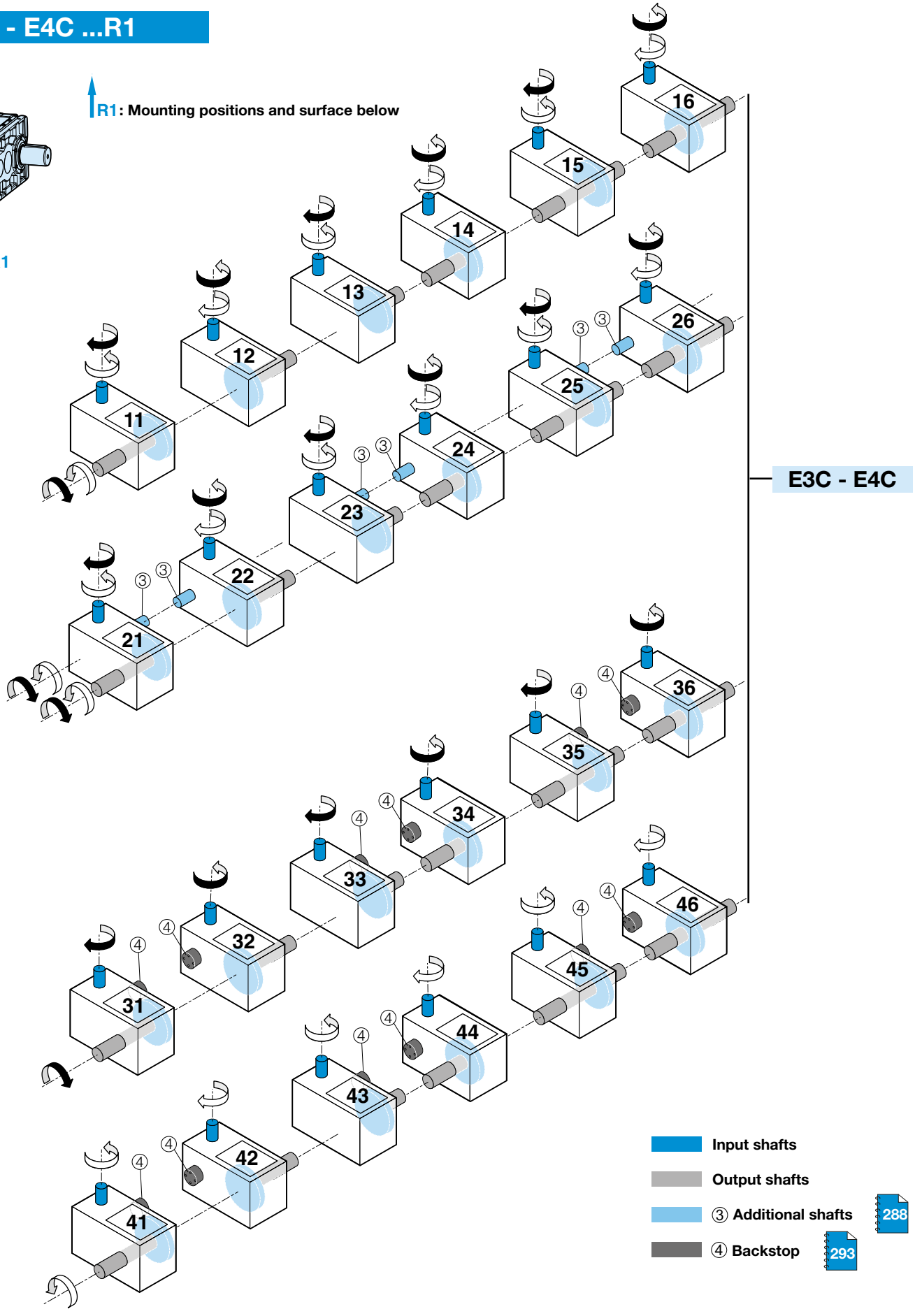

E3C - E4C ...S5, T6, U3, U4

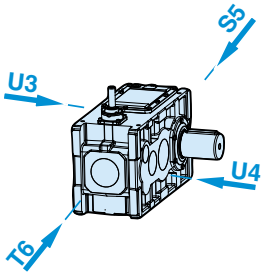

R1: Mounting positions and surface below

DESIGNATION FOR ORDER

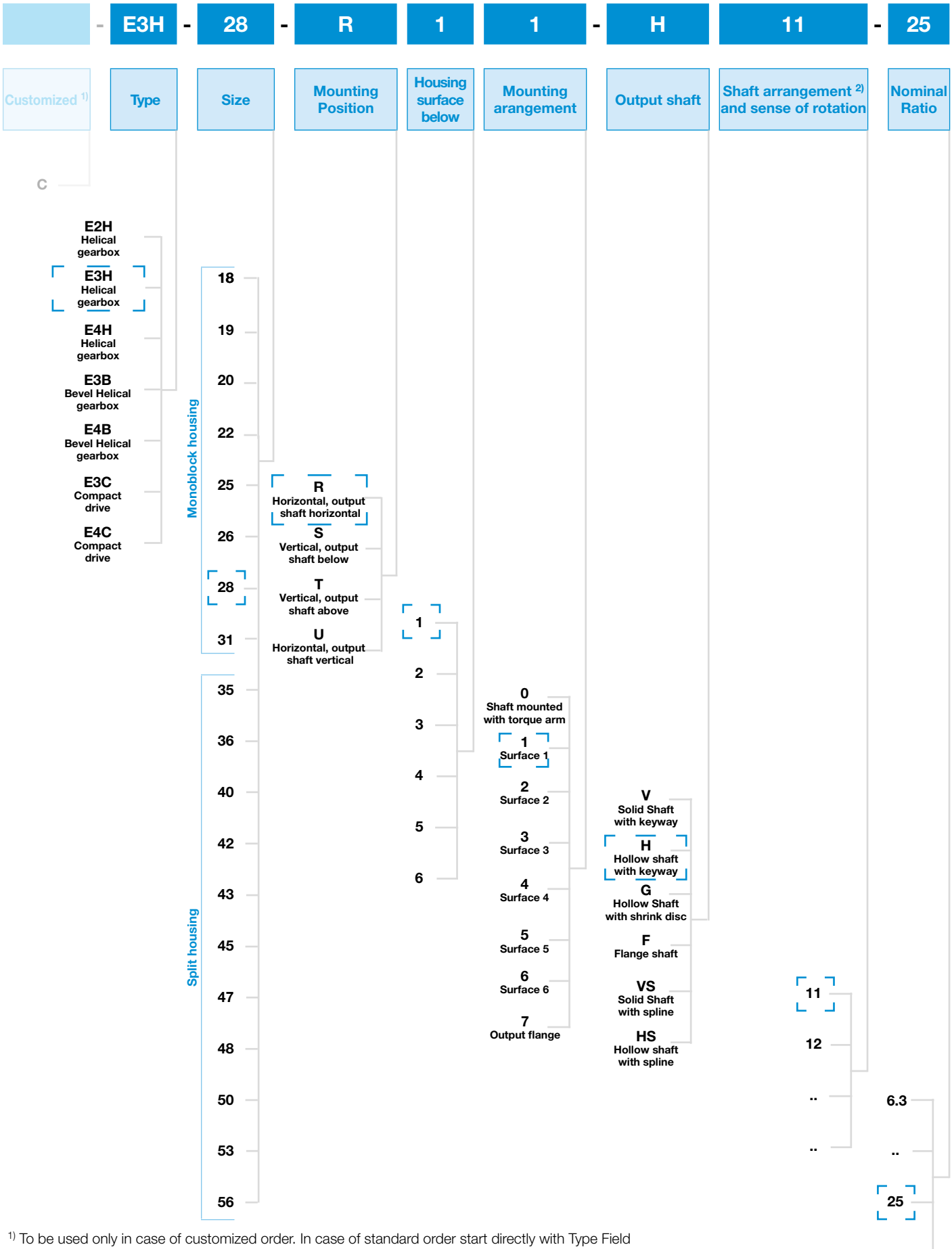

[1] To be used only in case of customized order. In case of standard order start directly with Type Field

[2] See page 10 ÷ 15

DESIGNATION FOR ORDER

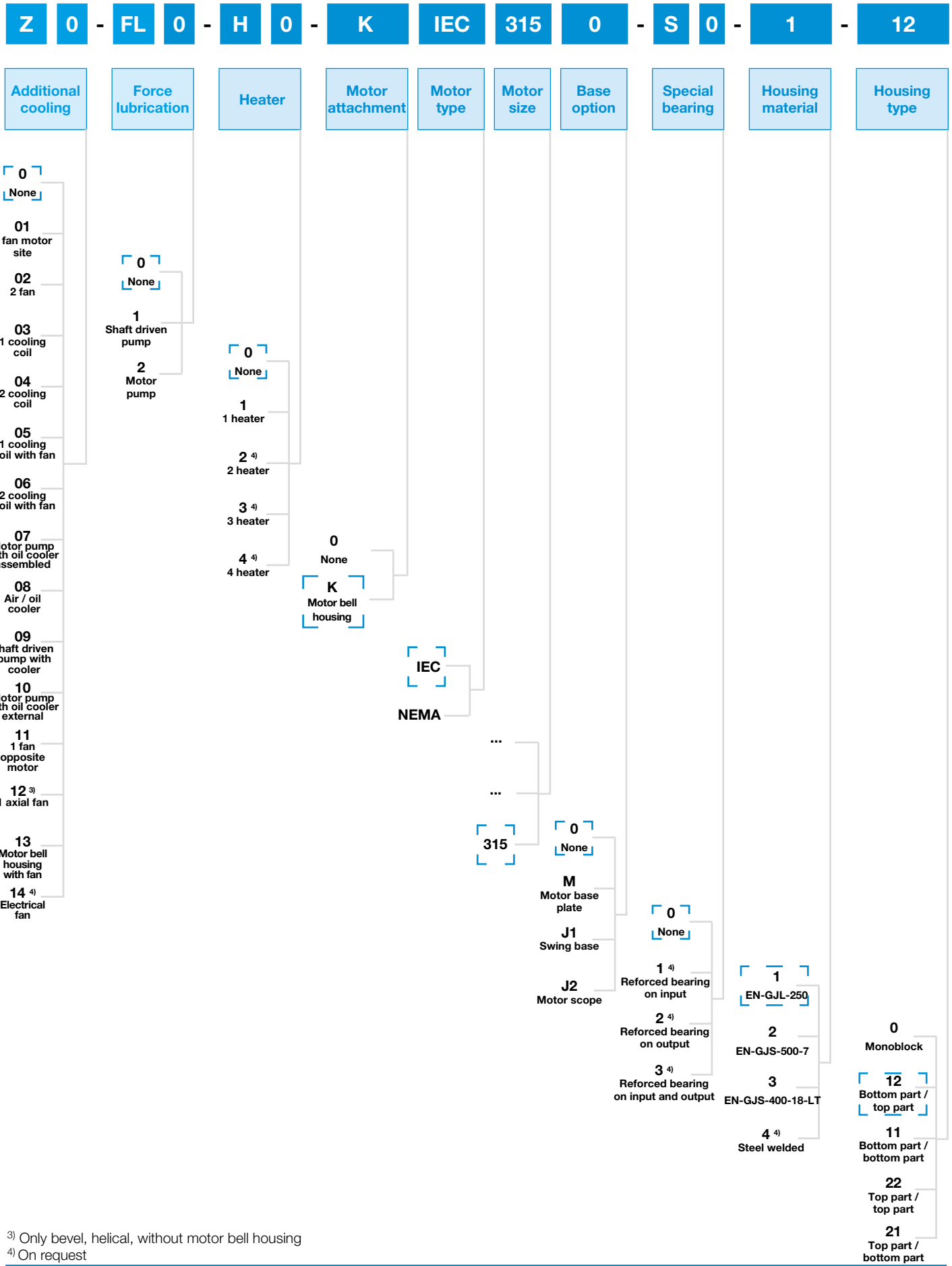

3) Only bevel, helical, without motor bell housing
4) On request

Description	Unit	Symbol
Input speed	[rpm]	n_1
Output speed	[rpm]	n_2
Required ratio		i
Nominal gearbox ratio		i_N
Effective ratio		i_{eff}
Motor power	[kW]	P_M
Nominal gearbox power	[kW]	P_N
Absorbed power of driven machine	[kW]	P_e
Thermal capacity	[kW]	P_t
Thermal capacity without additional cooling	[kW]	P_{t0}
Thermal capacity with radial fan	[kW]	P_{t1} 
Thermal capacity with cooling coil	[kW]	P_{t3} 
Thermal capacity with radial fan and cooling coil	[kW]	P_{t4} 
Thermal capacity with tunnel bell housing and integrated fan	[kW]	P_{t5}
Demand torque	[Nm]	T_2
Nominal gearbox torque	[Nm]	T_{2N}
Start-up or maximum motor or braking torque	[Nm]	T_{MAX}
Thermal Factor		f_W
Ambient temperature	[°C]	ϑ_U
Duty cycle per hour	[%]	ED
Altitude factor		f_H

Step	Selection	
1	Establish the type of gear unit and mounting arrangement	
2	Define the ratio required	$i = n_1 / n_2$
3	Define the demand torque	$T_2 = (9550 \cdot P_e) / n_2$
4	Pre-selection of gearbox checking nominal torque	T_{2N}

31 113

MONOBLOCK HOUSING

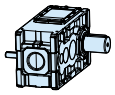

Helical gear units

Type	Size	i_N	T_{2N} [kNm]	Efficiency η	Page
E2H	18	4 - 315	8 - 10	0.98	32
	19	5 - 400	10 - 13		36
	20	5.6 - 450	13 - 15		40
E3H	22	4 - 450	16 - 20	0.97	44
	25	5.6 - 560	23 - 30		48
	26	4 - 450	30 - 36		52
E4H	28	4 - 450	30 - 39	0.96	56
	31	5.6 - 630	40 - 50		60

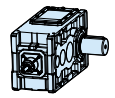

Bevel-helical gear units

Type	Size	i_N	T_{2N} [kNm]	Efficiency η	Page
E3B	18	9 - 315	6 - 10	0.96	64
	19	11.2 - 400	8 - 13		68
	20	12.5 - 450	9 - 15		72
	22	9 - 315	14 - 20		76
E4B	25	11.2 - 400	18 - 30	0.95	80
	26	9 - 315	24 - 36		84
	28	9 - 315	24 - 39		88
	31	12.5 - 450	32 - 50		92

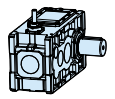

Compact drives

Type	Size	i_N	T_{2N} [kNm]	Efficiency η	Page
E3C	18	25 - 315	9 - 10	0.96	96
	19	31.5 - 400	12 - 13		98
	20	35.5 - 450	14 - 15		100
	22	25 - 315	19 - 20		102
E4C	25	31.5 - 400	24 - 30	0.95	104
	26	25 - 315	34 - 36		106
	28	25 - 315	35 - 39		108
	31	35.5 - 450	47 - 50		110

SPLIT HOUSING

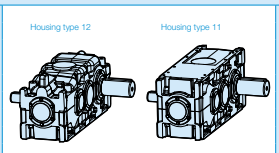

Helical gear units

Type	Size	i_N	T_{2N} [kNm]	Efficiency η	Page
E2H	35	4 - 450	59 - 64	0.98	114
	36	5 - 450	59 - 68		118
	40	5- 630	79 - 89		122
	42	4 - 450	100 - 111		126
	43	4.5 - 500	104 - 119		130
E3H	45	5 - 560	118 - 140	0.97	134
	47	6.3 - 710	152 - 178		138
E4H	48	4 - 450	177 - 191	0.96	142
	50	4 - 450	185 - 213		146
	53	4.5 - 560	230 - 255		150
	56	5.6 - 630	280 - 310		154

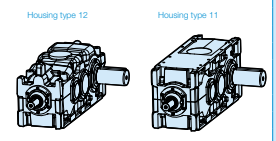

Bevel-helical gear units

Type	Size	i_N	T_{2N} [kNm]	Efficiency η	Page
E3B	35	9 - 315	43 - 65	0.96	158
	36	10 - 355	49 - 71		162
	40	11.2 - 400	57 - 85		166
	42	9 - 315	75 - 113		170
	43	10 - 355	85 - 130		174
	45	11.2 - 400	93 - 135		178
E4B	47	28 - 500	158 - 175	0.95	182
	48	18 - 315	170 - 191		186
	50	18 - 315	204 - 212		190
	53	22.4 - 400	234 - 255		194
	56	25 - 450	283 - 310		198

5	Define application factor	K_A

27

Table 1: Gear unit application factor K_A [1]	Intermitt. Use (0,5 h)	Shifts [2]
Blowers, Ventilators		
Air cooler		1.4...1.5
Axial blowers	0.8	1.2...1.3
Cooling tower fans	1.2	1.6...1.7
Heat exchangers		1.5
Rotary piston blowers	1	1.25...1.5
Suction draught blower	1	1.25...1.5
Turbo exhauster	0.8	1.2...1.3
Cableways		
Continuous ropeways		1.4...1.6
Freight ways		1.3...1.4
Shuttle cableways		1.4...1.8
T-bar lifts		1.3...1.4

6	Determine the gearbox size	$T_{2N} \geq T_2 \cdot K_A$
7	Check the peak torque	$T_{max} \leq (9550 \cdot P_N) / n_1 \cdot f_E \cdot f_R$
	Define frequency factor	f_E
	Define reversal factor	f_R

Table 2: Operating frequency factor f_E					
2	1.6	1.4	1.2	1.1	1
with ... load peaks per hour					
1	2-10	11-20	21-50	51-100	>100

Table 3: Reversal factor f_R		
1.0	0.85	0.7
Steady direction of load	reversing very rarely [4] or only slightly [5]	regular reversing operations

8	Check thermal capacity	$P_t \geq P_e$
		$P_t = P_{t_} \cdot f_W \cdot f_H$

Input and output shafts are intended for torque transmission only through the application of load-free couplings. In cases of presence of external radial or axial loads contact Dana for application verification. (See Enquiry Form on page 26).

Design Example

Driven Machine: Belt conveyor for freight loading
Required output power: $\mathbf{P_e}$ = 44 kW
Speed: $\mathbf{n_2}$ = 22 rpm
Duty cycle: **ED** = 100 %
Starts per hour: 10
Daily operation duration: 24 h/day
Ambient temperature: ϑ_U = 30 °C
Installation: Outdoors in the open air (shaded), at sea level

Prime mover:

Three-phase electric motor
Motor output: $\mathbf{P_M}$ = 55 kW
Motor speed: $\mathbf{n_1}$ = 1500 rpm
Max. motor torque: $\mathbf{T_{max}}$ = 560 Nm (pull-out torque)

1	Establish the type of gear unit and mounting arrangement

A bevel helical gear unit for horizontal installation in a hollow shaft version with shrink disc is required.

Type		Size	i_N	T_{2N} [kNm]	Efficiency η	Page
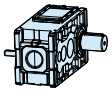 Helical gear units	E2H	18	4 - 315	8 - 10	0.98	32
		19	5 - 400	10 - 13		36
		20	5.6 - 450	13 - 15		40
	E3H	22	4 - 450	16 - 20	0.97	44
		25	5.6 - 560	23 - 30		48
		26	4 - 450	30 - 36		52
	E4H	28	4 - 450	30 - 39	0.96	56
		31	5.6 - 630	40 - 50		60
MONOBLOCK HOUSING 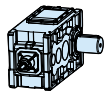 Bevel-helical gear units	E3B	18	9 - 315	6 - 10	0.96	64
		19	11.2 - 400	8 - 13		68
		20	12.5 - 450	9 - 15		72
		22	9 - 315	14 - 20		76
	E4B	25	11.2 - 400	18 - 30	0.95	80
		26	9 - 315	24 - 36		84
		28	9 - 315	24 - 39		88
		31	12.5 - 450	32 - 50		92
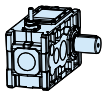 Compact drives	E3C	18	25 - 315	9 - 10	0.96	96
		19	31.5 - 400	12 - 13		98
		20	35.5 - 450	14 - 15		100
		22	25 - 315	19 - 20		102
	E4C	25	31.5 - 400	24 - 30	0.95	104
		26	25 - 315	34 - 36		106
		28	25 - 315	35 - 39		108
		31	35.5 - 450	47 - 50		110

2	Define the ratio required

$i = n_1 / n_2 = 1500 / 22 = 68.2$

3	Define the demand torque

$T_2 = (9550 \cdot P_e) / n_2 = (9550 \cdot 44\ kW) / 22\ rpm = 19100\ Nm$

4	Pre-selection of gearbox checking nominal torque	31

Type		Size	i_N	T_{2N} [kNm]	Efficiency η	Page
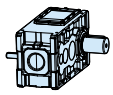 Helical gear units	E2H	18	4 - 315	8 - 10	0.98	32
		19	5 - 400	10 - 13		36
		20	5.6 - 450	13 - 15		40
	E3H	22	4 - 450	16 - 20	0.97	44
		25	5.6 - 560	23 - 30		48
		26	4 - 450	30 - 36		52
	E4H	28	4 - 450	30 - 39	0.96	56
		31	5.6 - 630	40 - 50		60
MONOBLOCK HOUSING 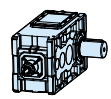 Bevel-helical gear units	E3B	18	9 - 315	6 - 10	0.96	64
		19	11.2 - 400	8 - 13		68
		20	12.5 - 450	9 - 15		72
		22	9 - 315	14 - 20		76
	E4B	25	11.2 - 400	18 - 30	0.95	80
		26	9 - 315	24 - 36		84
		28	9 - 315	24 - 39		88
		31	12.5 - 450	32 - 50		92
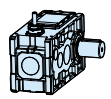 Compact drives	E3C	18	25 - 315	9 - 10	0.96	96
		19	31.5 - 400	12 - 13		98
		20	35.5 - 450	14 - 15		100
		22	25 - 315	19 - 20		102
	E4C	25	31.5 - 400	24 - 30	0.95	104
		26	25 - 315	34 - 36		106
		28	25 - 315	35 - 39		108
		31	35.5 - 450	47 - 50		110

5 Define Application factor

27

Table 1: Gear unit application factor K_A [1]	Intermitt. Use (0,5 h)	Shifts [2]
Blowers, Ventilators		
Air cooler		1.4...1.5
Turbo compressors	1	1.25...1.5
Conveyors		
Apron conveyors		1.2...1.5
Band elevators	1	1.25...1.5
Belt conveyors	1.0...1.1	1.2...1.4
Bucket conveyors		1.2...1.5
Canvas belt elevators	1	1.25...1.5

K_A = 1.4 (upper value for continuous use)

6 Determine the gearbox size

$T_{2N} \geq T_2 \cdot K_A = 19100 \cdot 1.4 = 26740$ Nm

Refer to page 31 (technical data summary)
Pre-Selection: **E3B25**

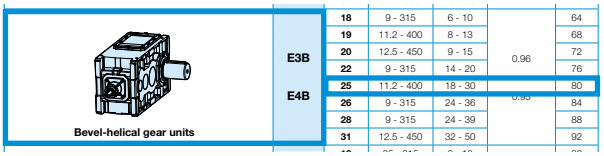

Refer to page 81 for details on pre-selected size
E3B25 with ratio i_{eff} = 68.57:1, **P_N** = 65 kW and T_{2N} = 28556 Nm

E3B / E4B ...25 | MONOBLOCK HOUSING | **50 Hz** | **30 kNm**

	i_N	i_{eff}	n_2 [rpm]	T_{2N} [Nm]	P_N [kW]	J [Kgm²]	R1 P_{t0} [kW]	R1	R1 H_2O	R1 $+H_2O$	S5 P_{t0} [kW]	S5	S5 H_2O	S5 $+H_2O$	T6 P_{t0} [kW]	T6	T6 H_2O	T6 $+H_2O$	Type
1500 rpm	**11.2**	11.94	126	18688	246	0.0892	86	227	225	352	64	169	167	261	59	155	154	240	
	12.5	13.64	110	21179	244	0.0790	86	227	225	352	64	169	167	261	59	155	154	240	
	14	14.92	101	23137	244	0.0735	86	227	225	352	64	169	167	261	59	155	154	240	
	16	16.91	89	26163	243	0.0670	86	227	225	352	64	169	167	261	59	155	154	240	
	18	18.61	81	28832	243	0.0629	86	227	225	352	64	169	167	261	59	155	154	240	
	20	21.49	70	29098	213	0.0579	86	227	225	352	64	169	167	261	59	155	154	240	
	22.4	23.88	63	29098	191	0.0549	83	233	225	360	61	173	167	267	56	159	154	246	
	25	26.63	56	28556	168	0.0531	96	238	226	368	71	177	168	273	65	162	154	251	
	28	29.85	50	25451	134	0.0507	79	212	225	327	59	157	167	243	54	145	154	224	**E3B** (x3)
	31.5	34.29	44	28556	131	0.0275	78	201	225	311	58	150	167	231	53	138	154	213	
	35.5	38.24	39	28020	115	0.0266	79	198	225	307	58	147	167	228	54	135	154	209	
	40	42.86	35	25629	94	0.0255	71	184	225	288	53	137	167	214	48	126	154	197	
	45	47.76	31	28556	94	0.0157	66	166	225	286	49	123	167	212	45	113	154	195	
	50	53.27	28	27489	81	0.0152	65	162	225	286	48	120	167	212	45	110	154	195	
	56	59.69	25	25629	67	0.0146	65	153	225	286	48	114	167	212	44	104	154	195	
	63	68.57	22	28556	65	0.0084	65	133	225	286	48	99	167	212	44	91	154	195	
	71	76.48	20	27489	56	0.0082	65	129	225	286	48	96	167	212	44	88	154	195	

$T_{2N} \geq 26740$ Nm
28556 Nm ≥ 26740Nm **OK**

7 Check the peak torque

$T_{max} \leq (9550 \cdot P_N) / n_1 \cdot f_E \cdot f_R$

With operating frequency factor f_E from table 2: **f_E = 1.6**

Table 2: Operating frequency factor f_E					
2	**1.6**	**1.4**	**1.2**	**1.1**	**1**
with ... load peaks per hour					
1	2-10	11-20	21-50	51-100	>100

With reversal factor f_R from table 3: **f_R = 1.0**

Table 3: Reversal factor f_R		
1.0	**0.85**	**0.7**
Steady direction of load	reversing very rarely [4] or only slightly [5]	regular reversing operations

T_{max} ≤ (9550 · 65 kW) / 1500 rpm · 1.6 · 1 = **662.1 Nm**

560 Nm ≤ 662.1 Nm **OK**

[4] Rarely reversing: up to 3 reversing cycles in the lifetime with equal load in both directions.
[5] Slighly reversing: up to 3 million reversing cycles in the lifetime with a reversing load of up to 40% of the main directional load.

8	Check thermal capacity

$P_t \geq P_e$

with $P_t = P_{t_} \cdot f_W \cdot F_H$

$P_{t_}$ choosing from one of the following:
- **P_{t0}** Thermal capacity without additional cooling
- **P_{t1}** Thermal capacity with Fan
- **P_{t3}** Thermal capacity with cooling coil
- **P_{t4}** Thermal capacity with fan and cooling coil

With **P_{t0}** = **65** (see page. 81)

E3B / E4B ...25 | MONOBLOCK HOUSING | **50 Hz** | **30 kNm**

	i_N	i_{eff}	n_2 [rpm]	T_{2N} [Nm]	P_N [kW]	J [Kgm²]	R1 P_{t0} [kW]	R1	R1 H_2O	R1 $+H_2O$	S5 P_{t0} [kW]	S5	S5 H_2O	S5 $+H_2O$	T6 P_{t0} [kW]	T6	T6 H_2O	T6 $+H_2O$	Type
500 rpm	**11.2**	11.94	126	18688	246	0.0892	86	227	225	352	64	169	167	261	59	155	154	240	
	12.5	13.64	110	21179	244	0.0790	86	227	225	352	64	169	167	261	59	155	154	240	
	14	14.92	101	23137	244	0.0735	86	227	225	352	64	169	167	261	59	155	154	240	
	16	16.91	89	26163	243	0.0670	86	227	225	352	64	169	167	261	59	155	154	240	
	18	18.61	81	28832	243	0.0629	86	227	225	352	64	169	167	261	59	155	154	240	
	20	21.49	70	29098	213	0.0579	86	227	225	352	64	169	167	261	59	155	154	240	
	22.4	23.88	63	29098	191	0.0549	83	233	225	360	61	173	167	267	56	159	154	246	
	25	26.63	56	28556	168	0.0531	96	238	226	368	71	177	168	273	65	162	154	251	
	28	29.85	50	25451	134	0.0507	79	212	225	327	59	157	167	243	54	145	154	224	**E3B**
	31.5	34.29	44	28556	131	0.0275	78	201	225	311	58	150	167	231	53	138	154	213	×3
	35.5	38.24	39	28020	115	0.0266	79	198	225	307	58	147	167	228	54	135	154	209	
	40	42.86	35	25629	94	0.0255	71	184	225	288	53	137	167	214	48	126	154	197	
	45	47.76	31	28556	94	0.0157	66	166	225	286	49	123	167	212	45	113	154	195	
	50	53.27	28	27489	81	0.0152	65	162	225	286	48	120	167	212	45	110	154	195	
	56	59.69	25	25629	67	0.0146	65	153	225	286	48	114	167	212	44	104	154	195	
	63	68.57	22	28556	65	0.0084	65	133	225	286	48	99	167	212	44	91	154	195	
	71	76.48	20	27489	56	0.0082	65	129	225	286	48	96	167	212	44	88	154	195	

With thermal factor **f_W** from table below:
f_W = 0.86 for ϑU = 30 °C and **ED** = 100%

f_W					
ϑ_U [°C]	ED %				
	100	**80**	**60**	**40**	**20**
10	1.14	1.21	1.34	1.53	2.03
20	1.00	1.06	1.17	1.34	1.78
30	0.86	0.91	1.00	1.15	1.53
40	0.71	0.76	0.84	0.96	1.27
50	0.57	0.61	0.67	0.77	1.02

With **f_H** from table below:
f_H = 1.00

	Altitude H in m above sea level				
	up to 999	**1000 - 2000**	**2000 - 3000**	**3000 - 4000**	**4000 - 5000**
f_H	1.00	0.95	0.91	0.87	0.83

Gearbox without additional cooling:
P_t = 65 kW · 0.86 · 1 = 55.9 kW

P_e = 44 kW **< P_t** = 55.9 kW : **No additional cooling is necessary**

Confirmed Selection:

E3B-25-R11-H11-63-Z0

9	Check thermal capacity of tunnel bell housing with integrated fan

The customer has requested a direct motor connection while also needing to achieve a higher thermal rating
P_e = 75 kW

$P_{t5} \geq P_e$

with

$$P_{t5} = P_1 \cdot f_W \cdot F_H \cdot 0.8$$

P_{t5} Thermal capacity with tunnel bell housing and fan
P_{t1} Thermal capacity with Fan

with **P_{t1}** = 133 kW (see page 81)

E3B / E4B ...25 MONOBLOCK HOUSING **50 Hz** **30 kNm**

	i_N	i_{eff}	n_2 [rpm]	T_{2N} [Nm]	P_N [kW]	J [Kgm²]	R1 P_{t0} [kW]	R1	R1 H_2O	R1 $+H_2O$	S5 P_{t0} [kW]	S5	S5 H_2O	S5 $+H_2O$	T6 P_{t0} [kW]	T6	T6 H_2O	T6 $+H_2O$	Type
1500 rpm	**11.2**	11.94	126	18688	246	0.0892	86	227	225	352	64	169	167	261	59	155	154	240	
	12.5	13.64	110	21179	244	0.0790	86	227	225	352	64	169	167	261	59	155	154	240	
	14	14.92	101	23137	244	0.0735	86	227	225	352	64	169	167	261	59	155	154	240	
	16	16.91	89	26163	243	0.0670	86	227	225	352	64	169	167	261	59	155	154	240	
	18	18.61	81	28832	243	0.0629	86	227	225	352	64	169	167	261	59	155	154	240	
	20	21.49	70	29098	213	0.0579	86	227	225	352	64	169	167	261	59	155	154	240	
	22.4	23.88	63	29098	191	0.0549	83	233	225	360	61	173	167	267	56	159	154	246	
	25	26.63	56	28556	168	0.0531	96	238	226	368	71	177	168	273	65	162	154	251	
	28	29.85	50	25451	134	0.0507	79	212	225	327	59	157	167	243	54	145	154	224	E3B
	31.5	34.29	44	28556	131	0.0275	78	201	225	311	58	150	167	231	53	138	154	213	
	35.5	38.24	39	28020	115	0.0266	79	198	225	307	58	147	167	228	54	135	154	209	
	40	42.86	35	25629	94	0.0255	71	184	225	288	53	137	167	214	48	126	154	197	
	45	47.76	31	28556	94	0.0157	66	166	225	286	49	123	167	212	45	113	154	195	
	50	53.27	28	27489	81	0.0152	65	162	225	286	48	120	167	212	45	110	154	195	
	56	59.69	25	25629	67	0.0146	65	153	225	286	48	114	167	212	44	104	154	195	
	63	68.57	22	28556	65	0.0084	65	133	225	286	48	99	167	212	44	91	154	195	
	71	76.48	20	27489	56	0.0082	65	129	225	286	48	96	167	212	44	88	154	195	

With thermal factor **f_W** from table below:
f_W = 0.86 for ϑU = 30 °C and **ED** = 100%

	f_W				
ϑ_U [°C]	ED %				
	100	**80**	**60**	**40**	**20**
10	1.14	1.21	1.34	1.53	2.03
20	1.00	1.06	1.17	1.34	1.78
30	0.86	0.91	1.00	1.15	1.53
40	0.71	0.76	0.84	0.96	1.27
50	0.57	0.61	0.67	0.77	1.02

With **f_H** from table below:
f_H = 1.00

	Altitude H in m above sea level				
	up to 999	**1000 - 2000**	**2000 - 3000**	**3000 - 4000**	**4000 - 5000**
f_H	1.00	0.95	0.91	0.87	0.83

P_{t5} = 133 kW · 0.86 · 1 · 0.8 = 91.5 kW

P_e = 75 kW **<** **P_{t5}** = 91.5 kW

Confirmed Selection:

E3B-25-R11-H11-63-Z0

RADIAL AND AXIAL LOADS (ENQUIRY FORM)

To be sent to the Dana area contact person

Mr. / Mrs. _____
Company _____
Street _____
Postal code / Locality _____
Country _____
Telephone _____
Telefax _____
E-Mail _____

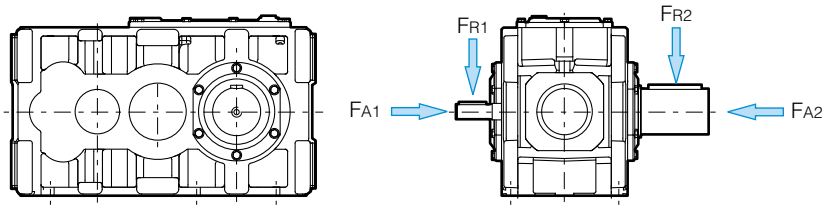

To the verification of the admissible strain of the input shaft and the output shaft due to exterior forces.

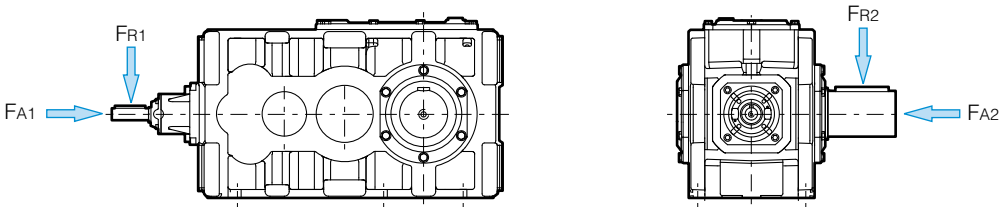

Specify please with negative sign the forces working in a direction opposite to the one represented.

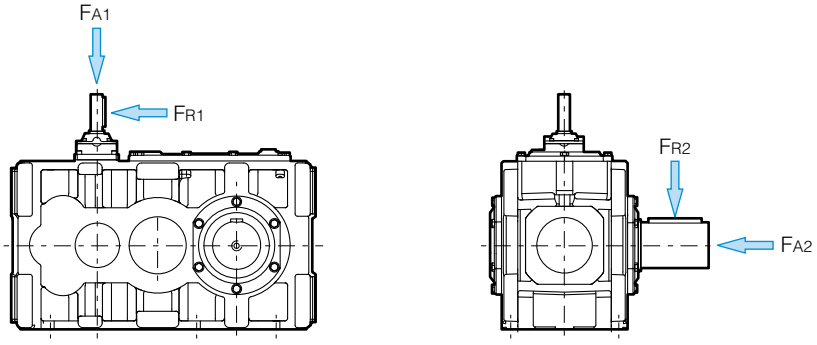

Please note the negative sign of distance of load applications on a hollow shaft.

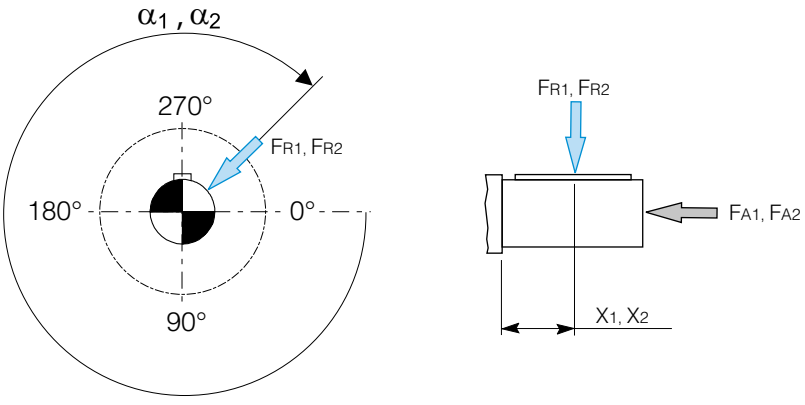

F_{R1} [N] =	_____	**Radial loads**
F_{A1} [N] =	_____	**Axial loads**
X_1 [mm] =	_____	**Distance of load application**
α_1 =	_____	**Direction of load**

F_{R2} [N] =	_____	**Radial loads**
F_{A2} [N] =	_____	**Axial loads**
X_2 [mm] =	_____	**Distance of load application**
α_2 =	_____	**Direction of load**

Gear unit application factors are in line with DIN standard no. 3990 part 11 (edition 2/89) and are based on our experience for normal operating conditions. Changes in the necessary drive selection may take place after stating the exact operating conditions.

Table 1: **Gear unit application factor K_A** [1]	**Intermitt. Use** (0,5 h)	**Shifts** [2]
Blowers, Ventilators		
Air cooler		1.4...1.5
Axial blowers	0.8	1.2...1.3
Cooling tower fans	1.2	1.6...1.7
Heat exchangers		1.5
Rotary piston blowers	1	1.25...1.5
Suction draught blower	1	1.25...1.5
Turbo exhauster	0.8	1.2...1.3
Cableways		
Continuous ropeways		1.4...1.6
Freight ways		1.3...1.4
Shuttle cableways		1.4...1.8
T-bar lifts		1.3...1.4
Cement Industry		
Concrete mixers		1.5
Crushers		1.2...1.4
Roller mills		2
Rotary kilns		2
Separators		1.6
Tube mills		1.8
Chemical industry		
Agitators for materials		
with constant density	1	1.3...1.5
with variable density	1.2	1.4...1.6
Agitators with variable gas absorbt.	1.4	1.6...1.8
Centrifuges	1	1.25...1.35
Drying kilns		1.5
Kneading machines		2
Toasters	1	1.3...1.5
Compressors		
Piston compressors		1.8...1.9
Rotary compressors		1.4...1.5
Turbo compressors	1	1.25...1.5
Conveyors		
Apron conveyors		1.2...1.5
Band elevators	1	1.25...1.5
Belt conveyors	1.0...1.1	1.2...1.4
Bucket conveyors		1.2...1.5
Canvas belt elevators	1	1.25...1.5
Cellular bucket belt conveyors	1	1.25...1.5
Chain bucket elevators	1	1.25...1.5
Circular conveyors	1	1.25...1.5
Escalators	1	1.2...1.4
Goods lifts		1.2...1.5
Hoisting engines		1.5...1.8
Passenger lifts		1.5...1.8
Rail travelling devices		1.5
Scraper chain conveyors	1	1.25...1.5
Screw conveyors	1	1.25...1.5
Sinking mine machines	1.5	1.75...2.0
Steel belt conveyors	1	1.25...1.5
Winders	1.4	1.6

Table 1: **Gear unit application factor K_A** [1]	**Intermitt. Use** (0,5 h)	**Shifts** [2]
Cranes Classified acc. to FEM 1001		
Crushers		
Ball crushers		1.75...2.0
Hammer mills		1.75...2.0
Rebound crushers		1.75...2.0
Rod mills		1.75...2.0
Roller mills		2
Swinging crushers		1.75...2.0
Tube mills		1.8
Dredgers		
Bucket chain drives		1.75...1.85
Bucket wheels		1.75...2.2
Cutter heads		2.2
Dumping devices		1.3...1.5
Manoeuvring winches	1	1.25...1.5
Slewing gears		1.4...1.8
Sucking pumps	1	1.25...1.5
Travelling gears (caterpillar)	1.2	1.6...1.8
Travelling gears (rails)	1	1.25...1.5
Food Industry Machinery		
Beet sugar production		
Beet washing machines & cutters		1.5
Slicing machines	1.2	1.2
Juice boilers and refrigerators		1.4
Bottling&container filling machines	0.8	1.25...1.5
Flour bucket elevators	0.8	1.2...1.3
Kneading machines	1	1.25...1.5
Mash tubs	1	1.25...1.5
Packaging machines	0.8	1.2...1.3
Sugar cane crushers		1.25...1.5
Sugar cane knives [3]		1.7
Sugar cane mills [3]		1.7
Generators, Converters [3]		
Frequency converters		1.8...2.0
Generators	0.8	1.2...1.3
Welding generators	1.5	1.75...2.0
Metal Working Machines		
Crank presses		1.75...2.0
Forging presses		1.75...2.0
Hammers		1.75...2.0
Plate bending machines		1.25...1.5
Plate straitening presses		1.75...2.0
Roller levellers		1.6
Stamping presses		1.75...2.0
Metallurgical Industry		
Blast furnace blowers		1.25...1.5
Converters		1.75...2.0
Inclined furnace hoists		1.75...2.0
Mining, Stone an Clay Working Machines		
Conical crushers		2
Endless chain transporters		1.5
Jaw breakers		2
Jolters		1.5
Mine ventilating fans		1.5
Rolling crushers		1.5
Rotary crushers		2
Rotary kilns		2
Separators		1.5
Toothed roll crusher		2
Tub-pushing devices		1.5

Table 1: **Gear unit application factor K_A** [1]	**Intermitt. Use** (0,5 h)	**Shifts** [2]
Oil Industry		
Charging filter pumps		1.25...1.5
Flush boring pumps		1.25...1.5
Pipeline pumps		1.25...1.5
Rotary drilling equipment	1.5	1.75...2.0
Paper Machines for all types		1.8...2.5
Presses [3]		1.1...1.2
Pumps		
Centrifugal pumps	1	1.2...1.3
Charge pumps	1.5	1.75...2.0
Piston pumps	1.2...1.3	1.4...1.8
Plunger pumps		2
Sludgers	1	1.25...1.5
Rolling Mills		
Belt winders	1	1.25...1.5
Billet shears		2
Blooming- and slabbing mills		2
Capstan wheels		1.5
Chain transfer		1.5
Cold band rolling mills [3]		1.75...1.85
Cooling bed transfer frames		1.5
Continuous casting drivers [3]		1.4
Continuous shears [3]		1.5
Crank type shears	1	1.2
Cropping shears		2
De-scaling breakers		2
Drawing bench drives		2
High speed roller tables		1.5
Ingot conveyors		2
Ingot pushers		1.2
Looper		1.5
Loop lifter		1.5
Low speed roller tables		1.5
Plate rolling trains		2
Plate shears		2
Plate tilters	1	1.2
Plate trimming shears		1.5
Reversing blooming mills		2.5
Reversing plate mills		1.8
Reversing sheet mills		2
Reversing slabbing mills		2.5
Reversing wire mills		1.8
Rod reel & belt winders		1.5
Roll adjustment devices		1.5
Roll weighting drives	0.9	1.2
Roller straighteners		1.6
Roller tables continuous		1.5
Roller tables intermittent		2
Sintering belt drives		1.5
Straightening & transp. equipment		1.5
Thin sheet rolling trains		2
Transfer skids		1.5
Tube reverse equipment		1.8
Turntables (Continuous casting)		1.5
Walking beam conveyors		2
Winders		1.6
Working roller tables		2

APPLICATION FACTOR

Table 1: Gear unit application factor K_A [1]	**Intermitt. Use** (0,5 h)	**Shifts** [2]
Rubber and Plastic Industry Machinery		
Calenders		1.5
Extruders		1.5
Kneading machines		1.8
Mixers	1.0...1.4	1.3...1.7
Rolling mills		2
Rotary cooler		1.3...1.4
Textile Machines		
Calender	1	1.25...1.5
Looms	1	1.25...1.5
Printing and dyeing machines	1	1.25...1.5
Take-up rollers	1	1.25...1.5
Willows	1	1.25...1.5
Water Treatment		
Circular and longitudinal rakes	1	1.3...1.5
Filter presses	1	1.3...1.5
Flocculation agitators	0.8	1.2...1.3
Pre-thickeners		1.2...1.3
Raking equipment	1	1.2...1.3
Rotary aerators		1.5...1.7
Screw pumps		1.3...1.4
Thickeners		1.2
Water wheels		2
Wood Working Machines		
Barkers	1.5	1.75...2.0
Planing machines	1	1.25...1.5
Saw frames	1.5	1.75...2.0

Table 2: Operating frequency factor f_E					
2	**1.6**	**1.4**	**1.2**	**1.1**	**1**
with ... load peaks per hour					
1	2-10	11-20	21-50	51-100	>100

Table 3: Reversal factor f_R		
1.0	**0.85**	**0.7**
Steady direction of load	reversing very rarely [4] or only slightly [5]	regular reversing operations

[1] Application factors apply to the following driving motors: electric motors, turbines and fluid power motors. When combustion engines are the driving force, inquiries have to be made.
[2] The lower table value is for single shift operation and for lighter applications, the upper table value is for continuous use and heavier applications.
[3] Design is in accordance with maximum torque.
[4] Rarely reversing: up to 3 reversing cycles in the lifetime with equal load in both directions.
[5] Slighly reversing: up to 3 million reversing cycles in the lifetime with a reversing load of up to 40% of the main directional load.

TECHNICAL DATA SUMMARY - MONOBLOCK HOUSING

	Type		Size	i_N	T_{2N} [kNm]	Efficiency η	Page
MONOBLOCK HOUSING	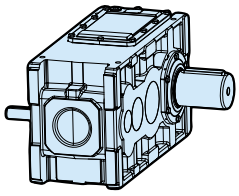 Helical gear units	E2H	18	4 - 315	8 - 10	0.98	32
			19	5 - 400	10 - 13		36
			20	5.6 - 450	13 - 15		40
		E3H	22	4 - 450	16 - 20	0.97	44
			25	5.6 - 560	23 - 30		48
		E4H	26	4 - 450	30 - 36	0.96	52
			28	4 - 450	30 - 39		56
			31	5.6 - 630	40 - 50		60
	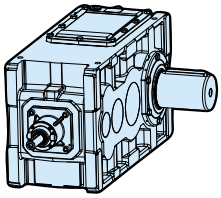 Bevel-helical gear units	E3B	18	9 - 315	6 - 10	0.96	64
			19	11.2 - 400	8 - 13		68
			20	12.5 - 450	9 - 15		72
			22	9 - 315	14 - 20		76
		E4B	25	11.2 - 400	18 - 30	0.95	80
			26	9 - 315	24 - 36		84
			28	9 - 315	24 - 39		88
			31	12.5 - 450	32 - 50		92
	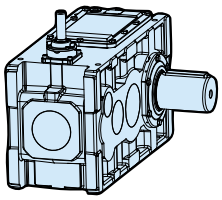 Compact drives	E3C	18	25 - 315	9 - 10	0.96	96
			19	31.5 - 400	12 - 13		98
			20	35.5 - 450	14 - 15		100
			22	25 - 315	19 - 20		102
		E4C	25	31.5 - 400	24 - 30	0.95	104
			26	25 - 315	34 - 36		106
			28	25 - 315	35 - 39		108
			31	35.5 - 450	47 - 50		110

E2H / E3H / E4H ...18 — MONOBLOCK HOUSING — 50 Hz — 10 kNm

n_1 = 1000 rpm

i_N	i_{eff}	n_2 [rpm]	T_{2N} [Nm]	P_N [kW]	J [Kgm²]	R1 P_{t0} [kW]	R1	R1 H_2O	R1 $+H_2O$	S5 P_{t0} [kW]	S5	S5 H_2O	S5 $+H_2O$	T6 P_{t0} [kW]	T6	T6 H_2O	T6 $+H_2O$	Type
4	4.00	250	8857	232	0.0313	79	124	140	186	59	92	104	138	54	85	95	127	E2H x2
4.5	4.49	223	8932	208	0.0264	84	126	144	186	63	94	107	138	58	86	98	127	
5	5.06	198	9165	190	0.0222	92	128	146	186	68	95	108	138	63	87	100	127	
5.6	5.72	175	9457	173	0.0195	96	128	149	184	71	95	111	137	65	87	102	126	
6.3	6.35	157	9457	156	0.0162	97	127	148	182	72	94	110	135	66	86	101	124	
7.1	7.26	138	9457	136	0.0134	95	122	143	174	70	90	106	129	65	83	98	119	
8	7.94	126	9457	125	0.0123	91	114	140	167	68	85	104	124	62	78	95	114	
9	9.00	111	9457	110	0.0099	86	105	140	167	64	78	104	124	59	71	95	114	
10	9.90	101	9457	100	0.0094	86	103	140	167	64	77	104	124	59	71	95	114	
11.2	11.44	87	9457	87	0.0073	84	102	140	167	62	76	104	124	57	70	95	114	
12.5	12.71	79	9457	78	0.0068	78	102	140	167	58	76	104	124	54	70	95	114	
14	14.17	71	9457	70	0.0057	74	102	140	167	55	76	104	124	50	70	95	114	
16	16.08	62	9457	62	0.0043	74	102	140	167	55	76	104	124	51	70	95	114	
18	17.79	56	9366	55	0.0039	74	102	140	167	55	76	104	124	50	70	95	114	
16	15.88	63	9457	62	0.0079	59	69	93	112	44	51	69	83	40	47	64	76	E3H x3
18	17.71	56	9457	56	0.0072	61	69	93	112	45	51	69	83	41	47	64	76	
20	20.10	50	9457	49	0.0063	62	72	93	112	46	54	69	83	42	49	64	76	
22.4	22.48	44	9515	44	0.0047	54	68	93	112	40	51	69	83	37	47	64	76	
25	25.07	40	9366	39	0.0043	53	68	93	112	39	51	69	83	36	47	64	76	
28	28.45	35	9366	34	0.0039	55	68	93	112	41	51	69	83	37	47	64	76	
31.5	31.47	32	9191	31	0.0038	49	68	93	112	37	51	69	83	34	47	64	76	
35.5	35.09	28	9366	28	0.0029	49	68	93	112	37	51	69	83	34	47	64	76	
40	39.82	25	9366	25	0.0027	49	68	93	112	37	51	69	83	34	47	64	76	
45	44.05	23	9191	22	0.0026	49	68	93	112	37	51	69	83	34	47	64	76	
50	51.73	19	9366	19	0.0014	49	68	93	112	37	51	69	83	34	47	64	76	
56	57.70	17	9366	17	0.0014	49	68	93	112	37	51	69	83	34	47	64	76	
63	65.47	15	9366	15	0.0013	49	68	93	112	37	51	69	83	34	47	64	76	
71	72.42	14	9016	13	0.0012	49	68	93	112	37	51	69	83	34	47	64	76	
80	78.96	13	9191	12	0.0009	49	68	93	112	37	51	69	83	34	47	64	76	
90	89.59	11	9191	11	0.0009	49	68	93	112	37	51	69	83	34	47	64	76	
100	99.11	10	9016	10	0.0009	49	68	93	112	37	51	69	83	34	47	64	76	
90	93.28	11	9191	10	0.0011	37	51	70	84	27	38	52	62	25	35	48	57	E4H x4
100	104.04	10	9191	9	0.0011	37	51	70	84	27	38	52	62	25	35	48	57	
112	118.05	8	9191	8	0.0011	37	51	70	84	27	38	52	62	25	35	48	57	
125	130.59	8	9016	7	0.0011	37	51	70	84	27	38	52	62	25	35	48	57	
140	144.21	7	9191	7	0.0006	37	51	70	84	27	38	52	62	25	35	48	57	
160	160.85	6	9191	6	0.0006	37	51	70	84	27	38	52	62	25	35	48	57	
180	182.52	5	9191	5	0.0006	46	58	73	88	34	43	54	65	31	39	50	60	
200	201.89	5	8844	5	0.0006	37	51	70	84	27	38	52	62	25	35	48	57	
224	233.19	4	9191	4	0.0003	37	51	70	84	27	38	52	62	25	35	48	57	
250	260.10	4	9191	4	0.0003	37	51	70	84	27	38	52	62	25	35	48	57	
280	295.13	3	9191	3	0.0003	37	51	70	84	27	38	52	62	25	35	48	57	
315	326.47	3	8844	3	0.0003	37	51	70	84	27	38	52	62	25	35	48	57	

E2H / E3H / E4H ...18 — MONOBLOCK HOUSING — 50 Hz — 10 kNm

	i_N	i_{eff}	n_2 [rpm]	T_{2N} [Nm]	P_N [kW]	J [Kgm²]	R1 P_{t0} [kW]	R1	R1 H_2O	R1 $+H_2O$	S5 P_{t0} [kW]	S5	S5 H_2O	S5 $+H_2O$	T6 P_{t0} [kW]	T6	T6 H_2O	T6 $+H_2O$	Type
n_1 = 1500 rpm	**4**	4.00	375	8857	348	0.0313	76	166	133	221	56	123	99	164	52	113	91	151	E2H (x2)
	4.5	4.49	334	8932	312	0.0264	80	168	137	222	60	125	102	165	55	115	94	151	
	5	5.06	296	9165	285	0.0222	88	170	139	222	65	127	103	165	60	116	95	152	
	5.6	5.72	262	9457	260	0.0195	91	170	142	219	68	126	105	163	62	116	97	149	
	6.3	6.35	236	9457	234	0.0162	92	169	141	217	69	125	105	161	63	115	96	148	
	7.1	7.26	207	9457	205	0.0134	90	162	136	207	67	120	101	154	62	111	93	141	
	8	7.94	189	9457	187	0.0123	87	152	133	199	64	113	99	148	59	104	91	136	
	9	9.00	167	9457	165	0.0099	82	139	133	199	61	104	99	148	56	95	91	136	
	10	9.90	152	9457	150	0.0094	82	138	133	199	61	102	99	148	56	94	91	136	
	11.2	11.44	131	9457	130	0.0073	80	136	133	199	59	101	99	148	54	93	91	136	
	12.5	12.71	118	9457	117	0.0068	75	136	133	199	55	101	99	148	51	93	91	136	
	14	14.17	106	9457	105	0.0057	70	136	133	199	52	101	99	148	48	93	91	136	
	16	16.08	93	9457	92	0.0043	71	136	133	199	52	101	99	148	48	93	91	136	
	18	17.79	84	9366	83	0.0039	70	136	133	199	52	101	99	148	48	93	91	136	
	16	15.88	94	9457	94	0.0079	56	92	89	133	42	68	66	99	38	63	61	91	E3H (x3)
	18	17.71	85	9457	84	0.0072	58	92	89	133	43	68	66	99	39	63	61	91	
	20	20.10	75	9457	74	0.0063	59	96	89	133	44	72	66	99	40	66	61	91	
	22.4	22.48	67	9515	66	0.0047	51	91	89	133	38	68	66	99	35	62	61	91	
	25	25.07	60	9366	59	0.0043	50	91	89	133	37	68	66	99	34	62	61	91	
	28	28.45	53	9366	52	0.0039	52	91	89	133	39	68	66	99	35	62	61	91	
	31.5	31.47	48	9191	46	0.0038	47	91	89	133	35	68	66	99	32	62	61	91	
	35.5	35.09	43	9366	42	0.0029	47	91	89	133	35	68	66	99	32	62	61	91	
	40	39.82	38	9366	37	0.0027	47	91	89	133	35	68	66	99	32	62	61	91	
	45	44.05	34	9191	33	0.0026	47	91	89	133	35	68	66	99	32	62	61	91	
	50	51.73	29	9366	28	0.0014	47	91	89	133	35	68	66	99	32	62	61	91	
	56	57.70	26	9366	25	0.0014	47	91	89	133	35	68	66	99	32	62	61	91	
	63	65.47	23	9366	22	0.0013	47	91	89	133	35	68	66	99	32	62	61	91	
	71	72.42	21	9016	20	0.0012	47	91	89	133	35	68	66	99	32	62	61	91	
	80	78.96	19	9191	18	0.0009	47	91	89	133	35	68	66	99	32	62	61	91	
	90	89.59	17	9191	16	0.0009	47	91	89	133	35	68	66	99	32	62	61	91	
	100	99.11	15	9016	14	0.0009	47	91	89	133	35	68	66	99	32	62	61	91	
	90	93.28	16	9191	15	0.0011	35	68	67	100	26	51	50	74	24	47	46	68	E4H (x4)
	100	104.04	14	9191	14	0.0011	35	68	67	100	26	51	50	74	24	47	46	68	
	112	118.05	13	9191	12	0.0011	35	68	67	100	26	51	50	74	24	47	46	68	
	125	130.59	11	9016	11	0.0011	35	68	67	100	26	51	50	74	24	47	46	68	
	140	144.21	10	9191	10	0.0006	35	68	67	100	26	51	50	74	24	47	46	68	
	160	160.85	9	9191	9	0.0006	35	68	67	100	26	51	50	74	24	47	46	68	
	180	182.52	8	9191	8	0.0006	43	77	69	105	32	57	51	78	30	53	47	72	
	200	201.89	7	8844	7	0.0006	35	68	67	100	26	51	50	74	24	47	46	68	
	224	233.19	6	9191	6	0.0003	35	68	67	100	26	51	50	74	24	47	46	68	
	250	260.10	6	9191	6	0.0003	35	68	67	100	26	51	50	74	24	47	46	68	
	280	295.13	5	9191	5	0.0003	35	68	67	100	26	51	50	74	24	47	46	68	
	315	326.47	5	8844	4	0.0003	35	68	67	100	26	51	50	74	24	47	46	68	

E2H / E3H / E4H ...18 — MONOBLOCK HOUSING — 60 Hz — 10 kNm

	i_N	i_{eff}	n_2 [rpm]	T_{2N} [Nm]	P_N [kW]	J [Kgm²]	R1 P_{t0} [kW]	R1	R1 H_2O	R1 $+H_2O$	S5 P_{t0} [kW]	S5	S5 H_2O	S5 $+H_2O$	T6 P_{t0} [kW]	T6	T6 H_2O	T6 $+H_2O$	Type
n_1 = 1200 rpm	4	4.00	300	8857	278	0.0313	78	142	137	199	58	106	102	148	53	97	94	136	E2H (x2)
	4.5	4.49	267	8932	250	0.0264	83	145	141	199	62	107	105	148	57	99	97	136	
	5	5.06	237	9165	228	0.0222	90	146	143	200	67	109	106	148	62	100	98	136	
	5.6	5.72	210	9457	208	0.0195	94	146	146	197	70	109	109	146	64	100	100	135	
	6.3	6.35	189	9457	187	0.0162	95	145	145	195	71	108	108	145	65	99	99	133	
	7.1	7.26	165	9457	164	0.0134	93	139	140	186	69	104	104	138	63	95	96	127	
	8	7.94	151	9457	150	0.0123	89	131	137	179	66	97	102	133	61	89	94	122	
	9	9.00	133	9457	132	0.0099	85	120	137	179	63	89	102	133	58	82	94	122	
	10	9.90	121	9457	120	0.0094	84	118	137	179	63	88	102	133	58	81	94	122	
	11.2	11.44	105	9457	104	0.0073	82	117	137	179	61	87	102	133	56	80	94	122	
	12.5	12.71	94	9457	94	0.0068	77	117	137	179	57	87	102	133	53	80	94	122	
	14	14.17	85	9457	84	0.0057	72	117	137	179	54	87	102	133	49	80	94	122	
	16	16.08	75	9457	74	0.0043	73	117	137	179	54	87	102	133	50	80	94	122	
	18	17.79	67	9366	66	0.0039	72	117	137	179	54	87	102	133	49	80	94	122	
	16	15.88	76	9457	75	0.0079	58	79	92	120	43	59	68	89	40	54	63	82	E3H (x3)
	18	17.71	68	9457	67	0.0072	59	79	92	120	44	59	68	89	41	54	63	82	
	20	20.10	60	9457	59	0.0063	61	83	92	120	45	62	68	89	41	57	63	82	
	22.4	22.48	53	9515	53	0.0047	53	78	92	120	39	58	68	89	36	53	63	82	
	25	25.07	48	9366	47	0.0043	52	78	92	120	39	58	68	89	35	53	63	82	
	28	28.45	42	9366	41	0.0039	53	78	92	120	40	58	68	89	37	53	63	82	
	31.5	31.47	38	9191	37	0.0038	48	78	92	120	36	58	68	89	33	53	63	82	
	35.5	35.09	34	9366	34	0.0029	48	78	92	120	36	58	68	89	33	53	63	82	
	40	39.82	30	9366	30	0.0027	48	78	92	120	36	58	68	89	33	53	63	82	
	45	44.05	27	9191	26	0.0026	48	78	92	120	36	58	68	89	33	53	63	82	
	50	51.73	23	9366	23	0.0014	48	78	92	120	36	58	68	89	33	53	63	82	
	56	57.70	21	9366	20	0.0014	48	78	92	120	36	58	68	89	33	53	63	82	
	63	65.47	18	9366	18	0.0013	48	78	92	120	36	58	68	89	33	53	63	82	
	71	72.42	17	9016	16	0.0012	48	78	92	120	36	58	68	89	33	53	63	82	
	80	78.96	15	9191	15	0.0009	48	78	92	120	36	58	68	89	33	53	63	82	
	90	89.59	13	9191	13	0.0009	48	78	92	120	36	58	68	89	33	53	63	82	
	100	99.11	12	9016	11	0.0009	48	78	92	120	36	58	68	89	33	53	63	82	
	90	93.28	13	9191	12	0.0011	36	59	69	90	27	44	51	67	25	40	47	61	E4H (x4)
	100	104.04	12	9191	11	0.0011	36	59	69	90	27	44	51	67	25	40	47	61	
	112	118.05	10	9191	10	0.0011	36	59	69	90	27	44	51	67	25	40	47	61	
	125	130.59	9	9016	9	0.0011	36	59	69	90	27	44	51	67	25	40	47	61	
	140	144.21	8	9191	8	0.0006	36	59	69	90	27	44	51	67	25	40	47	61	
	160	160.85	7	9191	7	0.0006	36	59	69	90	27	44	51	67	25	40	47	61	
	180	182.52	7	9191	6	0.0006	45	66	71	94	33	49	53	70	31	45	49	65	
	200	201.89	6	8844	6	0.0006	36	59	69	90	27	44	51	67	25	40	47	61	
	224	233.19	5	9191	5	0.0003	36	59	69	90	27	44	51	67	25	40	47	61	
	250	260.10	5	9191	4	0.0003	36	59	69	90	27	44	51	67	25	40	47	61	
	280	295.13	4	9191	4	0.0003	36	59	69	90	27	44	51	67	25	40	47	61	
	315	326.47	4	8844	3	0.0003	36	59	69	90	27	44	51	67	25	40	47	61	

E2H / E3H / E4H ...18 — MONOBLOCK HOUSING — 60 Hz — 10 kNm

n_1 = 1800 rpm

i_N	i_{eff}	n_2 [rpm]	T_{2N} [Nm]	P_N [kW]	J [Kgm²]	R1 P_{t0} [kW]	R1	R1 H_2O	R1 +H_2O	S5 P_{t0} [kW]	S5	S5 H_2O	S5 +H_2O	T6 P_{t0} [kW]	T6	T6 H_2O	T6 +H_2O	Type
4	4.00	450	8857	417	0.0313	73	171	129	226	54	127	96	168	50	117	88	154	E2H (x2)
4.5	4.49	401	8932	375	0.0264	78	173	133	226	58	129	99	168	53	118	91	154	
5	5.06	356	9165	341	0.0222	85	175	135	226	63	130	100	168	58	120	92	155	
5.6	5.72	315	9457	312	0.0195	88	175	138	223	66	130	102	166	60	120	94	152	
6.3	6.35	283	9457	281	0.0162	89	174	137	221	66	129	102	164	61	119	93	151	
7.1	7.26	248	9457	246	0.0134	87	167	132	211	65	124	98	157	60	114	90	144	
8	7.94	227	9457	225	0.0123	84	156	129	203	63	116	96	151	57	107	88	139	
9	9.00	200	9457	198	0.0099	80	144	129	203	59	107	96	151	55	98	88	139	
10	9.90	182	9457	180	0.0094	79	142	129	203	59	105	96	151	54	97	88	139	
11.2	11.44	157	9457	156	0.0073	77	140	129	203	57	104	96	151	53	96	88	139	
12.5	12.71	142	9457	140	0.0068	72	140	129	203	54	104	96	151	49	96	88	139	
14	14.17	127	9457	126	0.0057	68	140	129	203	50	104	96	151	46	96	88	139	
16	16.08	112	9457	111	0.0043	68	140	129	203	51	104	96	151	47	96	88	139	
18	17.79	101	9366	99	0.0039	68	140	129	203	50	104	96	151	46	96	88	139	
16	15.88	113	9457	112	0.0079	55	94	86	136	41	70	64	101	37	65	59	93	E3H (x3)
18	17.71	102	9457	101	0.0072	56	95	86	136	42	70	64	101	38	65	59	93	
20	20.10	90	9457	89	0.0063	57	99	86	136	42	74	64	101	39	68	59	93	
22.4	22.48	80	9515	80	0.0047	50	94	86	136	37	70	64	101	34	64	59	93	
25	25.07	72	9366	70	0.0043	49	94	86	136	36	70	64	101	33	64	59	93	
28	28.45	63	9366	62	0.0039	50	94	86	136	37	70	64	101	34	64	59	93	
31.5	31.47	57	9191	55	0.0038	46	94	86	136	34	70	64	101	31	64	59	93	
35.5	35.09	51	9366	50	0.0029	46	94	86	136	34	70	64	101	31	64	59	93	
40	39.82	45	9366	44	0.0027	46	94	86	136	34	70	64	101	31	64	59	93	
45	44.05	41	9191	39	0.0026	46	94	86	136	34	70	64	101	31	64	59	93	
50	51.73	35	9366	34	0.0014	46	94	86	136	34	70	64	101	31	64	59	93	
56	57.70	31	9366	31	0.0014	46	94	86	136	34	70	64	101	31	64	59	93	
63	65.47	27	9366	27	0.0013	46	94	86	136	34	70	64	101	31	64	59	93	
71	72.42	25	9016	23	0.0012	46	94	86	136	34	70	64	101	31	64	59	93	
80	78.96	23	9191	22	0.0009	46	94	86	136	34	70	64	101	31	64	59	93	
90	89.59	20	9191	19	0.0009	46	94	86	136	34	70	64	101	31	64	59	93	
100	99.11	18	9016	17	0.0009	46	94	86	136	34	70	64	101	31	64	59	93	
90	93.28	19	9191	19	0.0011	34	70	65	102	25	52	48	76	23	48	44	69	E4H (x4)
100	104.04	17	9191	17	0.0011	34	70	65	102	25	52	48	76	23	48	44	69	
112	118.05	15	9191	15	0.0011	34	70	65	102	25	52	48	76	23	48	44	69	
125	130.59	14	9016	13	0.0011	34	70	65	102	25	52	48	76	23	48	44	69	
140	144.21	12	9191	12	0.0006	34	70	65	102	25	52	48	76	23	48	44	69	
160	160.85	11	9191	11	0.0006	34	70	65	102	25	52	48	76	23	48	44	69	
180	182.52	10	9191	9	0.0006	42	79	67	107	31	59	50	80	29	54	46	73	
200	201.89	9	8844	8	0.0006	34	70	65	102	25	52	48	76	23	48	44	69	
224	233.19	8	9191	7	0.0003	34	70	65	102	25	52	48	76	23	48	44	69	
250	260.10	7	9191	7	0.0003	34	70	65	102	25	52	48	76	23	48	44	69	
280	295.13	6	9191	6	0.0003	34	70	65	102	25	52	48	76	23	48	44	69	
315	326.47	6	8844	5	0.0003	34	70	65	102	25	52	48	76	23	48	44	69	

E2H / E3H / E4H ...19 — MONOBLOCK HOUSING — 50 Hz — 13 kNm

n_1 = 1000 rpm

i_N	i_{eff}	n_2 [rpm]	T_{2N} [Nm]	P_N [kW]	J [Kgm²]	R1 P_{t0} [kW]	R1	R1 H_2O	R1 +H_2O	S5 P_{t0} [kW]	S5	S5 H_2O	S5 +H_2O	T6 P_{t0} [kW]	T6	T6 H_2O	T6 +H_2O	Type
5	4.96	202	10916	230	0.0409	100	142	198	220	75	106	147	163	69	97	135	150	E2H (x2)
5.6	5.57	180	11106	209	0.0340	103	141	198	220	77	105	147	163	70	96	135	150	
6.3	6.28	159	11390	190	0.0282	102	140	198	220	76	104	147	163	70	96	135	150	
7.1	7.09	141	12245	181	0.0242	102	135	198	220	76	100	147	163	70	92	135	150	
8	7.88	127	12174	162	0.0200	98	126	198	220	73	94	147	163	67	86	135	150	
9	9.01	111	12316	143	0.0163	94	117	198	220	69	87	147	163	64	80	135	150	
10	9.85	102	12316	131	0.0147	93	116	198	220	69	86	147	163	63	79	135	150	
11.2	11.17	90	12316	115	0.0118	89	116	198	220	66	86	147	163	60	79	135	150	
12.5	12.29	81	12316	105	0.0110	84	116	198	220	62	86	147	163	57	79	135	150	
14	14.19	70	12316	91	0.0085	83	116	198	220	62	86	147	163	57	79	135	150	
16	15.76	63	12316	82	0.0077	83	116	198	220	62	86	147	163	57	79	135	150	
18	17.58	57	12301	73	0.0064	83	116	198	220	62	86	147	163	57	79	135	150	
20	19.95	50	11889	62	0.0049	83	116	198	220	62	86	147	163	57	79	135	150	
22.4	22.07	45	11639	55	0.0044	83	116	198	220	62	86	147	163	57	79	135	150	
20	19.71	51	12301	65	0.0085	65	80	137	151	49	59	101	112	45	55	93	103	E3H (x3)
22.4	21.98	45	12301	59	0.0077	57	77	137	151	42	57	101	112	39	53	93	103	
25	24.94	40	11960	50	0.0067	56	77	137	151	41	57	101	112	38	53	93	103	
28	27.89	36	12301	46	0.0050	58	77	137	151	43	57	101	112	39	53	93	103	
31.5	31.11	32	12301	41	0.0046	56	77	137	151	41	57	101	112	38	53	93	103	
35.5	35.30	28	11858	35	0.0041	56	77	137	151	41	57	101	112	38	53	93	103	
40	39.05	26	11423	31	0.0039	56	77	137	151	41	57	101	112	38	53	93	103	
45	43.54	23	12078	29	0.0030	56	77	137	151	41	57	101	112	38	53	93	103	
50	49.41	20	11858	25	0.0028	56	77	137	151	41	57	101	112	38	53	93	103	
56	54.65	18	11208	21	0.0027	56	77	137	151	41	57	101	112	38	53	93	103	
63	64.18	16	12078	20	0.0015	56	77	137	151	41	57	101	112	38	53	93	103	
71	71.59	14	12078	18	0.0014	56	77	137	151	41	57	101	112	38	53	93	103	
80	81.23	12	11639	15	0.0013	56	77	137	151	41	57	101	112	38	53	93	103	
90	89.86	11	11208	13	0.0013	56	77	137	151	41	57	101	112	38	53	93	103	
100	97.97	10	12078	13	0.0009	56	77	137	151	41	57	101	112	38	53	93	103	
112	111.16	9	11639	11	0.0009	56	77	137	151	41	57	101	112	38	53	93	103	
125	122.96	8	11208	10	0.0009	56	77	137	151	41	57	101	112	38	53	93	103	
112	115.73	9	12078	11	0.0011	41	58	102	113	31	43	76	84	28	40	70	77	E4H (x4)
125	129.09	8	12078	10	0.0011	41	58	102	113	31	43	76	84	28	40	70	77	
140	146.47	7	11639	8	0.0011	41	58	102	113	31	43	76	84	28	40	70	77	
160	162.02	6	10996	7	0.0011	41	58	102	113	31	43	76	84	28	40	70	77	
180	178.93	6	11858	7	0.0006	50	65	102	113	37	48	76	84	34	44	70	77	
200	199.57	5	11858	6	0.0006	41	58	102	113	31	43	76	84	28	40	70	77	
224	226.45	4	11423	5	0.0006	41	58	102	113	31	43	76	84	28	40	70	77	
250	250.50	4	10996	5	0.0006	41	58	102	113	31	43	76	84	28	40	70	77	
280	289.33	3	11858	4	0.0003	41	58	102	113	31	43	76	84	28	40	70	77	
315	322.71	3	11858	4	0.0003	41	58	102	113	31	43	76	84	28	40	70	77	
355	366.18	3	11423	3	0.0003	41	58	102	113	31	43	76	84	28	40	70	77	
400	405.06	2	10996	3	0.0003	41	58	102	113	31	43	76	84	28	40	70	77	

E2H / E3H / E4H ...19 — MONOBLOCK HOUSING — 50 Hz — 13 kNm

n_1 = 1500 rpm

i_N	i_{eff}	n_2 [rpm]	T_{2N} [Nm]	P_N [kW]	J [Kgm²]	R1 P_{t0} [kW]	R1	R1 H_2O	R1 $+H_2O$	S5 P_{t0} [kW]	S5	S5 H_2O	S5 $+H_2O$	T6 P_{t0} [kW]	T6	T6 H_2O	T6 $+H_2O$	Type
5	4.96	302	10916	346	0.0409	96	190	189	262	71	141	140	194	65	130	129	179	E2H (x2)
5.6	5.57	269	11106	313	0.0340	98	188	189	262	73	140	140	194	67	129	129	179	
6.3	6.28	239	11390	285	0.0282	98	187	189	262	72	139	140	194	67	128	129	179	
7.1	7.09	212	12245	271	0.0242	97	179	189	262	72	133	140	194	67	123	129	179	
8	7.88	190	12174	243	0.0200	94	168	189	262	70	125	140	194	64	115	129	179	
9	9.01	166	12316	215	0.0163	89	156	189	262	66	116	140	194	61	106	129	179	
10	9.85	152	12316	196	0.0147	88	155	189	262	66	115	140	194	60	106	129	179	
11.2	11.17	134	12316	173	0.0118	84	155	189	262	63	115	140	194	58	106	129	179	
12.5	12.29	122	12316	157	0.0110	80	155	189	262	59	115	140	194	55	106	129	179	
14	14.19	106	12316	136	0.0085	80	155	189	262	59	115	140	194	54	106	129	179	
16	15.76	95	12316	123	0.0077	80	155	189	262	59	115	140	194	54	106	129	179	
18	17.58	85	12301	110	0.0064	80	155	189	262	59	115	140	194	54	106	129	179	
20	19.95	75	11889	94	0.0049	80	155	189	262	59	115	140	194	54	106	129	179	
22.4	22.07	68	11639	83	0.0044	80	155	189	262	59	115	140	194	54	106	129	179	
20	19.71	76	12301	98	0.0085	62	107	130	180	46	79	97	134	43	73	89	123	E3H (x3)
22.4	21.98	68	12301	88	0.0077	54	103	130	180	40	77	97	134	37	70	89	123	
25	24.94	60	11960	75	0.0067	53	103	130	180	39	77	97	134	36	70	89	123	
28	27.89	54	12301	69	0.0050	55	103	130	180	41	77	97	134	38	70	89	123	
31.5	31.11	48	12301	62	0.0046	53	103	130	180	39	77	97	134	36	70	89	123	
35.5	35.30	42	11858	53	0.0041	53	103	130	180	39	77	97	134	36	70	89	123	
40	39.05	38	11423	46	0.0039	53	103	130	180	39	77	97	134	36	70	89	123	
45	43.54	34	12078	44	0.0030	53	103	130	180	39	77	97	134	36	70	89	123	
50	49.41	30	11858	38	0.0028	53	103	130	180	39	77	97	134	36	70	89	123	
56	54.65	27	11208	32	0.0027	53	103	130	180	39	77	97	134	36	70	89	123	
63	64.18	23	12078	30	0.0015	53	103	130	180	39	77	97	134	36	70	89	123	
71	71.59	21	12078	27	0.0014	53	103	130	180	39	77	97	134	36	70	89	123	
80	81.23	18	11639	23	0.0013	53	103	130	180	39	77	97	134	36	70	89	123	
90	89.86	17	11208	20	0.0013	53	103	130	180	39	77	97	134	36	70	89	123	
100	97.97	15	12078	19	0.0009	53	103	130	180	39	77	97	134	36	70	89	123	
112	111.16	13	11639	16	0.0009	53	103	130	180	39	77	97	134	36	70	89	123	
125	122.96	12	11208	14	0.0009	53	103	130	180	39	77	97	134	36	70	89	123	
112	115.73	13	12078	16	0.0011	40	77	98	135	29	57	72	100	27	53	67	92	E4H (x4)
125	129.09	12	12078	15	0.0011	40	77	98	135	29	57	72	100	27	53	67	92	
140	146.47	10	11639	12	0.0011	40	77	98	135	29	57	72	100	27	53	67	92	
160	162.02	9	10996	11	0.0011	40	77	98	135	29	57	72	100	27	53	67	92	
180	178.93	8	11858	10	0.0006	47	86	98	135	35	64	72	100	32	59	67	92	
200	199.57	8	11858	9	0.0006	40	77	98	135	29	57	72	100	27	53	67	92	
224	226.45	7	11423	8	0.0006	40	77	98	135	29	57	72	100	27	53	67	92	
250	250.50	6	10996	7	0.0006	40	77	98	135	29	57	72	100	27	53	67	92	
280	289.33	5	11858	6	0.0003	40	77	98	135	29	57	72	100	27	53	67	92	
315	322.71	5	11858	6	0.0003	40	77	98	135	29	57	72	100	27	53	67	92	
355	366.18	4	11423	5	0.0003	40	77	98	135	29	57	72	100	27	53	67	92	
400	405.06	4	10996	4	0.0003	40	77	98	135	29	57	72	100	27	53	67	92	

E2H / E3H / E4H ...19 — MONOBLOCK HOUSING — 60 Hz — 13 kNm

	i_N	i_{eff}	n_2 [rpm]	T_{2N} [Nm]	P_N [kW]	J [Kgm²]	R1 P_{t0} [kW]	R1	R1 H_2O	R1 +H_2O	S5 P_{t0} [kW]	S5	S5 H_2O	S5 +H_2O	T6 P_{t0} [kW]	T6	T6 H_2O	T6 +H_2O	Type
n_1 = 1200 rpm	**5**	4.96	242	10916	277	0.0409	98	163	194	235	73	121	144	175	67	112	133	161	E2H (x2)
	5.6	5.57	215	11106	251	0.0340	101	162	194	235	75	120	144	175	69	111	133	161	
	6.3	6.28	191	11390	228	0.0282	100	161	194	235	75	120	144	175	69	110	133	161	
	7.1	7.09	169	12245	217	0.0242	100	154	194	235	75	115	144	175	69	105	133	161	
	8	7.88	152	12174	194	0.0200	96	144	194	235	72	107	144	175	66	99	133	161	
	9	9.01	133	12316	172	0.0163	92	134	194	235	68	99	144	175	63	91	133	161	
	10	9.85	122	12316	157	0.0147	91	133	194	235	68	99	144	175	62	91	133	161	
	11.2	11.17	107	12316	139	0.0118	87	133	194	235	65	99	144	175	59	91	133	161	
	12.5	12.29	98	12316	126	0.0110	82	133	194	235	61	99	144	175	56	91	133	161	
	14	14.19	85	12316	109	0.0085	82	133	194	235	61	99	144	175	56	91	133	161	
	16	15.76	76	12316	98	0.0077	82	133	194	235	61	99	144	175	56	91	133	161	
	18	17.58	68	12301	88	0.0064	82	133	194	235	61	99	144	175	56	91	133	161	
	20	19.95	60	11889	75	0.0049	82	133	194	235	61	99	144	175	56	91	133	161	
	22.4	22.07	54	11639	66	0.0044	82	133	194	235	61	99	144	175	56	91	133	161	
	20	19.71	61	12301	78	0.0085	64	92	134	162	48	68	99	120	44	63	91	111	E3H (x3)
	22.4	21.98	55	12301	70	0.0077	56	89	134	162	42	66	99	120	38	61	91	111	
	25	24.94	48	11960	60	0.0067	55	89	134	162	41	66	99	120	37	61	91	111	
	28	27.89	43	12301	55	0.0050	57	89	134	162	42	66	99	120	39	61	91	111	
	31.5	31.11	39	12301	50	0.0046	55	89	134	162	41	66	99	120	37	61	91	111	
	35.5	35.30	34	11858	42	0.0041	55	89	134	162	41	66	99	120	37	61	91	111	
	40	39.05	31	11423	37	0.0039	55	89	134	162	41	66	99	120	37	61	91	111	
	45	43.54	28	12078	35	0.0030	55	89	134	162	41	66	99	120	37	61	91	111	
	50	49.41	24	11858	30	0.0028	55	89	134	162	41	66	99	120	37	61	91	111	
	56	54.65	22	11208	26	0.0027	55	89	134	162	41	66	99	120	37	61	91	111	
	63	64.18	19	12078	24	0.0015	55	89	134	162	41	66	99	120	37	61	91	111	
	71	71.59	17	12078	21	0.0014	55	89	134	162	41	66	99	120	37	61	91	111	
	80	81.23	15	11639	18	0.0013	55	89	134	162	41	66	99	120	37	61	91	111	
	90	89.86	13	11208	16	0.0013	55	89	134	162	41	66	99	120	37	61	91	111	
	100	97.97	12	12078	15	0.0009	55	89	134	162	41	66	99	120	37	61	91	111	
	112	111.16	11	11639	13	0.0009	55	89	134	162	41	66	99	120	37	61	91	111	
	125	122.96	10	11208	11	0.0009	55	89	134	162	41	66	99	120	37	61	91	111	
	112	115.73	10	12078	13	0.0011	41	66	100	122	30	49	75	90	28	45	69	83	E4H (x4)
	125	129.09	9	12078	12	0.0011	41	66	100	122	30	49	75	90	28	45	69	83	
	140	146.47	8	11639	10	0.0011	41	66	100	122	30	49	75	90	28	45	69	83	
	160	162.02	7	10996	9	0.0011	41	66	100	122	30	49	75	90	28	45	69	83	
	180	178.93	7	11858	8	0.0006	49	74	100	122	36	55	75	90	33	51	69	83	
	200	199.57	6	11858	7	0.0006	41	66	100	122	30	49	75	90	28	45	69	83	
	224	226.45	5	11423	6	0.0006	41	66	100	122	30	49	75	90	28	45	69	83	
	250	250.50	5	10996	6	0.0006	41	66	100	122	30	49	75	90	28	45	69	83	
	280	289.33	4	11858	5	0.0003	41	66	100	122	30	49	75	90	28	45	69	83	
	315	322.71	4	11858	5	0.0003	41	66	100	122	30	49	75	90	28	45	69	83	
	355	366.18	3	11423	4	0.0003	41	66	100	122	30	49	75	90	28	45	69	83	
	400	405.06	3	10996	3	0.0003	41	66	100	122	30	49	75	90	28	45	69	83	

E2H / E3H / E4H ...19 — MONOBLOCK HOUSING — 60 Hz — 13 kNm

n_1 = 1800 rpm

i_N	i_{eff}	n_2 [rpm]	T_{2N} [Nm]	P_N [kW]	J [Kgm²]	R1 P_{t0} [kW]	R1	R1 H_2O	R1 $+H_2O$	S5 P_{t0} [kW]	S5	S5 H_2O	S5 $+H_2O$	T6 P_{t0} [kW]	T6	T6 H_2O	T6 $+H_2O$	Type
5	4.96	363	10916	415	0.0409	93	196	183	267	69	145	136	198	63	134	125	182	E2H (x2)
5.6	5.57	323	11106	376	0.0340	95	194	183	267	71	144	136	198	65	132	125	182	
6.3	6.28	287	11390	342	0.0282	95	193	183	267	70	143	136	198	65	132	125	182	
7.1	7.09	254	12245	326	0.0242	94	185	183	267	70	137	136	198	65	126	125	182	
8	7.88	228	12174	291	0.0200	91	173	183	267	67	129	136	198	62	118	125	182	
9	9.01	200	12316	258	0.0163	86	160	183	267	64	119	136	198	59	109	125	182	
10	9.85	183	12316	236	0.0147	86	159	183	267	64	118	136	198	59	109	125	182	
11.2	11.17	161	12316	208	0.0118	82	159	183	267	61	118	136	198	56	109	125	182	
12.5	12.29	146	12316	189	0.0110	78	159	183	267	58	118	136	198	53	109	125	182	
14	14.19	127	12316	164	0.0085	77	159	183	267	57	118	136	198	53	109	125	182	
16	15.76	114	12316	147	0.0077	77	159	183	267	57	118	136	198	53	109	125	182	
18	17.58	102	12301	132	0.0064	77	159	183	267	57	118	136	198	53	109	125	182	
20	19.95	90	11889	112	0.0049	77	159	183	267	57	118	136	198	53	109	125	182	
22.4	22.07	82	11639	99	0.0044	77	159	183	267	57	118	136	198	53	109	125	182	
20	19.71	91	12301	118	0.0085	60	110	126	184	45	82	94	136	41	75	86	125	E3H (x3)
22.4	21.98	82	12301	105	0.0077	53	106	126	184	39	79	94	136	36	72	86	125	
25	24.94	72	11960	90	0.0067	51	106	126	184	38	79	94	136	35	72	86	125	
28	27.89	65	12301	83	0.0050	53	106	126	184	40	79	94	136	36	72	86	125	
31.5	31.11	58	12301	75	0.0046	51	106	126	184	38	79	94	136	35	72	86	125	
35.5	35.30	51	11858	63	0.0041	51	106	126	184	38	79	94	136	35	72	86	125	
40	39.05	46	11423	55	0.0039	51	106	126	184	38	79	94	136	35	72	86	125	
45	43.54	41	12078	52	0.0030	51	106	126	184	38	79	94	136	35	72	86	125	
50	49.41	36	11858	45	0.0028	51	106	126	184	38	79	94	136	35	72	86	125	
56	54.65	33	11208	39	0.0027	51	106	126	184	38	79	94	136	35	72	86	125	
63	64.18	28	12078	35	0.0015	51	106	126	184	38	79	94	136	35	72	86	125	
71	71.59	25	12078	32	0.0014	51	106	126	184	38	79	94	136	35	72	86	125	
80	81.23	22	11639	27	0.0013	51	106	126	184	38	79	94	136	35	72	86	125	
90	89.86	20	11208	24	0.0013	51	106	126	184	38	79	94	136	35	72	86	125	
100	97.97	18	12078	23	0.0009	51	106	126	184	38	79	94	136	35	72	86	125	
112	111.16	16	11639	20	0.0009	51	106	126	184	38	79	94	136	35	72	86	125	
125	122.96	15	11208	17	0.0009	51	106	126	184	38	79	94	136	35	72	86	125	
112	115.73	16	12078	20	0.0011	38	80	95	138	28	59	70	102	26	54	65	94	E4H (x4)
125	129.09	14	12078	18	0.0011	38	80	95	138	28	59	70	102	26	54	65	94	
140	146.47	12	11639	15	0.0011	38	80	95	138	28	59	70	102	26	54	65	94	
160	162.02	11	10996	13	0.0011	38	80	95	138	28	59	70	102	26	54	65	94	
180	178.93	10	11858	12	0.0006	46	89	95	138	34	66	70	102	31	61	65	94	
200	199.57	9	11858	11	0.0006	38	80	95	138	28	59	70	102	26	54	65	94	
224	226.45	8	11423	10	0.0006	38	80	95	138	28	59	70	102	26	54	65	94	
250	250.50	7	10996	8	0.0006	38	80	95	138	28	59	70	102	26	54	65	94	
280	289.33	6	11858	8	0.0003	38	80	95	138	28	59	70	102	26	54	65	94	
315	322.71	6	11858	7	0.0003	38	80	95	138	28	59	70	102	26	54	65	94	
355	366.18	5	11423	6	0.0003	38	80	95	138	28	59	70	102	26	54	65	94	
400	405.06	4	10996	5	0.0003	38	80	95	138	28	59	70	102	26	54	65	94	

E2H / E3H / E4H ...20 — MONOBLOCK HOUSING — 50 Hz — 15 kNm

i_N	i_{eff}	n_2 [rpm]	T_{2N} [Nm]	P_N [kW]	J [Kgm²]	R1 P_{t0} [kW]	R1	R1 H_2O	R1 $+H_2O$	S5 P_{t0} [kW]	S5	S5 H_2O	S5 $+H_2O$	T6 P_{t0} [kW]	T6	T6 H_2O	T6 $+H_2O$	Type
5.6	5.77	173	13526	245	0.0466	116	165	264	297	86	123	196	221	79	113	180	203	E2H (x2)
6.3	6.49	154	12968	209	0.0385	124	164	262	295	92	122	195	219	84	112	179	201	
7.1	7.31	137	13344	191	0.0318	127	164	261	293	94	122	194	218	86	112	178	200	
8	8.26	121	14472	183	0.0269	128	162	258	288	95	120	191	214	88	110	176	196	
9	9.18	109	14190	162	0.0223	133	159	256	285	99	118	190	211	91	108	175	194	
10	10.49	95	14472	144	0.0181	127	151	256	273	95	112	190	203	87	103	175	187	
11.2	11.47	87	14472	132	0.0162	120	142	256	272	89	105	190	202	82	97	175	186	
12.5	13.00	77	14236	115	0.0129	110	131	256	272	82	97	190	202	75	89	175	186	
14	14.30	70	14236	104	0.0119	107	130	256	272	79	96	190	202	73	89	175	186	
16	16.52	61	14236	90	0.0092	101	130	256	272	75	96	190	202	69	89	175	186	
18	18.35	54	14236	81	0.0083	95	130	256	272	71	96	190	202	65	89	175	186	
20	20.47	49	14236	73	0.0069	93	130	256	272	69	96	190	202	64	89	175	186	
22.4	23.23	43	14002	63	0.0052	93	130	256	272	69	96	190	202	64	89	175	186	
25	25.69	39	13689	56	0.0047	93	130	256	272	69	96	190	202	64	89	175	186	
22.4	22.94	44	14236	65	0.0089	72	87	180	191	54	64	133	142	49	59	123	130	E3H (x3)
25	25.59	39	13961	57	0.0080	74	88	180	191	55	65	133	142	50	60	123	130	
28	29.03	34	13961	50	0.0069	76	92	180	191	57	68	133	142	52	63	123	130	
31.5	32.47	31	13961	45	0.0052	66	86	180	191	49	64	133	142	45	59	123	130	
35.5	36.22	28	13961	40	0.0047	65	86	180	191	48	64	133	142	44	59	123	130	
40	41.10	24	13961	36	0.0042	68	86	180	191	50	64	133	142	46	59	123	130	
45	45.46	22	13419	31	0.0040	62	86	180	191	46	64	133	142	42	59	123	130	
50	50.69	20	13961	29	0.0031	62	86	180	191	46	64	133	142	42	59	123	130	
56	57.52	17	13961	25	0.0028	62	86	180	191	46	64	133	142	42	59	123	130	
63	63.62	16	13419	22	0.0027	62	86	180	191	46	64	133	142	42	59	123	130	
71	74.72	13	13689	19	0.0015	62	86	180	191	46	64	133	142	42	59	123	130	
80	83.34	12	13689	17	0.0014	62	86	180	191	46	64	133	142	42	59	123	130	
90	94.57	11	13689	15	0.0013	62	86	180	191	46	64	133	142	42	59	123	130	
100	104.61	10	13152	13	0.0013	62	86	180	191	46	64	133	142	42	59	123	130	
112	114.05	9	13689	13	0.0010	62	86	180	191	46	64	133	142	42	59	123	130	
125	129.41	8	13689	11	0.0009	62	86	180	191	46	64	133	142	42	59	123	130	
140	143.15	7	13152	10	0.0009	62	86	180	191	46	64	133	142	42	59	123	130	
125	134.73	7	13689	11	0.0012	46	65	134	143	34	48	100	106	32	44	92	98	E4H (x4)
140	150.28	7	13689	10	0.0011	46	65	134	143	34	48	100	106	32	44	92	98	
160	170.52	6	13689	8	0.0011	46	65	134	143	34	48	100	106	32	44	92	98	
180	188.63	5	13152	7	0.0011	46	65	134	143	34	48	100	106	32	44	92	98	
200	208.3	5	13689	7	0.0006	46	65	134	143	34	48	100	106	32	44	92	98	
224	232.34	4	13689	6	0.0006	46	65	134	143	34	48	100	106	32	44	92	98	
250	263.63	4	13689	5	0.0006	46	65	134	143	34	48	100	106	32	44	92	98	
280	291.62	3	12888	5	0.0006	46	65	134	143	34	48	100	106	32	44	92	98	
315	336.83	3	13689	4	0.0003	46	65	134	143	34	48	100	106	32	44	92	98	
355	375.70	3	13689	4	0.0003	46	65	134	143	34	48	100	106	32	44	92	98	
400	426.30	2	13419	3	0.0003	46	65	134	143	34	48	100	106	32	44	92	98	
450	471.56	2	12888	3	0.0003	46	65	134	143	34	48	100	106	32	44	92	98	

n_1 = 1000 rpm

E2H / E3H / E4H ...20 — MONOBLOCK HOUSING — 50 Hz — 15 kNm

n_1 = 1500 rpm

i_N	i_{eff}	n_2 [rpm]	T_{2N} [Nm]	P_N [kW]	J [Kgm²]	R1 P_{t0} [kW]	R1	R1 H_2O	R1 $+H_2O$	S5 P_{t0} [kW]	S5	S5 H_2O	S5 $+H_2O$	T6 P_{t0} [kW]	T6	T6 H_2O	T6 $+H_2O$	Type
5.6	5.77	260	13526	368	0.0466	110	220	252	354	82	164	187	263	75	150	172	241	E2H (x2)
6.3	6.49	231	12968	314	0.0385	118	219	250	351	87	163	185	261	80	150	171	240	
7.1	7.31	205	13344	287	0.0318	121	219	248	349	90	163	184	259	82	149	170	238	
8	8.26	182	14472	275	0.0269	122	215	245	342	91	160	182	254	83	147	168	234	
9	9.18	163	14190	243	0.0223	126	212	244	339	94	157	181	252	86	145	167	231	
10	10.49	143	14472	217	0.0181	121	202	244	326	90	150	181	242	83	138	167	222	
11.2	11.47	131	14472	198	0.0162	114	189	244	324	85	140	181	241	78	129	167	221	
12.5	13.00	115	14236	172	0.0129	105	175	244	324	78	130	181	241	72	119	167	221	
14	14.30	105	14236	156	0.0119	102	173	244	324	76	129	181	241	70	118	167	221	
16	16.52	91	14236	135	0.0092	96	173	244	324	72	129	181	241	66	118	167	221	
18	18.35	82	14236	122	0.0083	90	173	244	324	67	129	181	241	62	118	167	221	
20	20.47	73	14236	109	0.0069	89	173	244	324	66	129	181	241	61	118	167	221	
22.4	23.23	65	14002	95	0.0052	89	173	244	324	66	129	181	241	61	118	167	221	
25	25.69	58	13689	84	0.0047	89	173	244	324	66	129	181	241	61	118	167	221	
22.4	22.94	65	14236	97	0.0089	69	116	171	227	51	86	127	169	47	79	117	155	E3H (x3)
25	25.59	59	13961	86	0.0080	70	117	171	227	52	87	127	169	48	80	117	155	
28	29.03	52	13961	76	0.0069	73	123	171	227	54	91	127	169	50	84	117	155	
31.5	32.47	46	13961	68	0.0052	63	115	171	227	47	85	127	169	43	79	117	155	
35.5	36.22	41	13961	61	0.0047	62	115	171	227	46	85	127	169	42	79	117	155	
40	41.10	36	13961	53	0.0042	65	115	171	227	48	85	127	169	44	79	117	155	
45	45.46	33	13419	46	0.0040	59	115	171	227	44	85	127	169	40	79	117	155	
50	50.69	30	13961	43	0.0031	59	115	171	227	44	85	127	169	40	79	117	155	
56	57.52	26	13961	38	0.0028	59	115	171	227	44	85	127	169	40	79	117	155	
63	63.62	24	13419	33	0.0027	59	115	171	227	44	85	127	169	40	79	117	155	
71	74.72	20	13689	29	0.0015	59	115	171	227	44	85	127	169	40	79	117	155	
80	83.34	18	13689	26	0.0014	59	115	171	227	44	85	127	169	40	79	117	155	
90	94.57	16	13689	23	0.0013	59	115	171	227	44	85	127	169	40	79	117	155	
100	104.61	14	13152	20	0.0013	59	115	171	227	44	85	127	169	40	79	117	155	
112	114.05	13	13689	19	0.0010	59	115	171	227	44	85	127	169	40	79	117	155	
125	129.41	12	13689	17	0.0009	59	115	171	227	44	85	127	169	40	79	117	155	
140	143.15	10	13152	14	0.0009	59	115	171	227	44	85	127	169	40	79	117	155	
125	134.73	11	13689	16	0.0012	44	86	128	170	33	64	95	126	30	59	87	116	E4H (x4)
140	150.28	10	13689	14	0.0011	44	86	128	170	33	64	95	126	30	59	87	116	
160	170.52	9	13689	13	0.0011	44	86	128	170	33	64	95	126	30	59	87	116	
180	188.63	8	13152	11	0.0011	44	86	128	170	33	64	95	126	30	59	87	116	
200	208.3	7	13689	10	0.0006	44	86	128	170	33	64	95	126	30	59	87	116	
224	232.34	6	13689	9	0.0006	44	86	128	170	33	64	95	126	30	59	87	116	
250	263.63	6	13689	8	0.0006	44	86	128	170	33	64	95	126	30	59	87	116	
280	291.62	5	12888	7	0.0006	44	86	128	170	33	64	95	126	30	59	87	116	
315	336.83	4	13689	6	0.0003	44	86	128	170	33	64	95	126	30	59	87	116	
355	375.70	4	13689	6	0.0003	44	86	128	170	33	64	95	126	30	59	87	116	
400	426.30	4	13419	5	0.0003	44	86	128	170	33	64	95	126	30	59	87	116	
450	471.56	3	12888	4	0.0003	44	86	128	170	33	64	95	126	30	59	87	116	

E2H / E3H / E4H ...20 — MONOBLOCK HOUSING — 60 Hz — 15 kNm

	i_N	i_{eff}	n_2 [rpm]	T_{2N} [Nm]	P_N [kW]	J [Kgm²]	R1 P_{t0} [kW]	R1	R1 H_2O	R1 +H_2O	S5 P_{t0} [kW]	S5	S5 H_2O	S5 +H_2O	T6 P_{t0} [kW]	T6	T6 H_2O	T6 +H_2O	Type
n_1 = 1200 rpm	**5.6**	5.77	208	13526	295	0.0466	114	189	259	318	84	141	193	236	78	129	177	217	E2H (x2)
	6.3	6.49	185	12968	251	0.0385	121	189	257	316	90	140	191	235	83	129	176	216	
	7.1	7.31	164	13344	229	0.0318	124	188	256	314	92	140	190	233	85	129	175	214	
	8	8.26	145	14472	220	0.0269	126	185	253	308	93	138	188	229	86	127	173	210	
	9	9.18	131	14190	194	0.0223	130	182	251	305	97	135	187	227	89	124	172	208	
	10	10.49	114	14472	173	0.0181	125	173	251	293	93	129	187	218	85	118	172	200	
	11.2	11.47	105	14472	159	0.0162	118	162	251	292	87	121	187	217	80	111	172	199	
	12.5	13.00	92	14236	138	0.0129	108	150	251	292	81	112	187	217	74	103	172	199	
	14	14.30	84	14236	125	0.0119	105	149	251	292	78	111	187	217	72	102	172	199	
	16	16.52	73	14236	108	0.0092	99	149	251	292	74	111	187	217	68	102	172	199	
	18	18.35	65	14236	97	0.0083	93	149	251	292	69	111	187	217	64	102	172	199	
	20	20.47	59	14236	87	0.0069	92	149	251	292	68	111	187	217	63	102	172	199	
	22.4	23.23	52	14002	76	0.0052	92	149	251	292	68	111	187	217	63	102	172	199	
	25	25.69	47	13689	67	0.0047	92	149	251	292	68	111	187	217	63	102	172	199	
	22.4	22.94	52	14236	78	0.0089	71	100	176	204	53	74	131	152	48	68	120	140	E3H (x3)
	25	25.59	47	13961	69	0.0080	72	101	176	204	54	75	131	152	49	69	120	140	
	28	29.03	41	13961	60	0.0069	75	105	176	204	56	78	131	152	51	72	120	140	
	31.5	32.47	37	13961	54	0.0052	65	99	176	204	48	73	131	152	44	68	120	140	
	35.5	36.22	33	13961	48	0.0047	64	99	176	204	47	73	131	152	43	68	120	140	
	40	41.10	29	13961	43	0.0042	66	99	176	204	49	73	131	152	45	68	120	140	
	45	45.46	26	13419	37	0.0040	61	99	176	204	45	73	131	152	42	68	120	140	
	50	50.69	24	13961	35	0.0031	61	99	176	204	45	73	131	152	42	68	120	140	
	56	57.52	21	13961	31	0.0028	61	99	176	204	45	73	131	152	42	68	120	140	
	63	63.62	19	13419	27	0.0027	61	99	176	204	45	73	131	152	42	68	120	140	
	71	74.72	16	13689	23	0.0015	61	99	176	204	45	73	131	152	42	68	120	140	
	80	83.34	14	13689	21	0.0014	61	99	176	204	45	73	131	152	42	68	120	140	
	90	94.57	13	13689	18	0.0013	61	99	176	204	45	73	131	152	42	68	120	140	
	100	104.61	11	13152	16	0.0013	61	99	176	204	45	73	131	152	42	68	120	140	
	112	114.05	11	13689	15	0.0010	61	99	176	204	45	73	131	152	42	68	120	140	
	125	129.41	9	13689	13	0.0009	61	99	176	204	45	73	131	152	42	68	120	140	
	140	143.15	8	13152	12	0.0009	61	99	176	204	45	73	131	152	42	68	120	140	
	125	134.73	9	13689	13	0.0012	45	74	132	153	34	55	98	114	31	51	90	105	E4H (x4)
	140	150.28	8	13689	11	0.0011	45	74	132	153	34	55	98	114	31	51	90	105	
	160	170.52	7	13689	10	0.0011	45	74	132	153	34	55	98	114	31	51	90	105	
	180	188.63	6	13152	9	0.0011	45	74	132	153	34	55	98	114	31	51	90	105	
	200	208.3	6	13689	8	0.0006	45	74	132	153	34	55	98	114	31	51	90	105	
	224	232.34	5	13689	7	0.0006	45	74	132	153	34	55	98	114	31	51	90	105	
	250	263.63	5	13689	7	0.0006	45	74	132	153	34	55	98	114	31	51	90	105	
	280	291.62	4	12888	6	0.0006	45	74	132	153	34	55	98	114	31	51	90	105	
	315	336.83	4	13689	5	0.0003	45	74	132	153	34	55	98	114	31	51	90	105	
	355	375.70	3	13689	5	0.0003	45	74	132	153	34	55	98	114	31	51	90	105	
	400	426.30	3	13419	4	0.0003	45	74	132	153	34	55	98	114	31	51	90	105	
	450	471.56	3	12888	3	0.0003	45	74	132	153	34	55	98	114	31	51	90	105	

E2H / E3H / E4H ...20 — MONOBLOCK HOUSING — 60 Hz — 15 kNm

n_1 = 1800 rpm

i_N	i_{eff}	n_2 [rpm]	T_{2N} [Nm]	P_N [kW]	J [Kgm²]	R1 P_{t0} [kW]	R1	R1 H_2O	R1 +H_2O	S5 P_{t0} [kW]	S5	S5 H_2O	S5 +H_2O	T6 P_{t0} [kW]	T6	T6 H_2O	T6 +H_2O	Type
5.6	5.77	312	13526	442	0.0466	107	227	244	361	80	168	181	268	73	155	167	246	E2H (x2)
6.3	6.49	277	12968	377	0.0385	114	226	242	358	85	168	180	266	78	154	165	244	
7.1	7.31	246	13344	344	0.0318	117	225	241	356	87	167	179	264	80	154	164	243	
8	8.26	218	14472	330	0.0269	118	222	238	349	88	165	177	259	81	152	163	238	
9	9.18	196	14190	291	0.0223	123	218	237	346	91	162	176	257	84	149	162	236	
10	10.49	172	14472	260	0.0181	118	208	237	332	87	154	176	247	80	142	162	227	
11.2	11.47	157	14472	238	0.0162	111	195	237	330	82	145	176	246	76	133	162	226	
12.5	13.00	138	14236	206	0.0129	102	180	237	330	76	134	176	246	70	123	162	226	
14	14.30	126	14236	188	0.0119	99	178	237	330	73	132	176	246	67	122	162	226	
16	16.52	109	14236	162	0.0092	93	178	237	330	69	132	176	246	64	122	162	226	
18	18.35	98	14236	146	0.0083	88	178	237	330	65	132	176	246	60	122	162	226	
20	20.47	88	14236	131	0.0069	86	178	237	330	64	132	176	246	59	122	162	226	
22.4	23.23	77	14002	114	0.0052	86	178	237	330	64	132	176	246	59	122	162	226	
25	25.69	70	13689	100	0.0047	86	178	237	330	64	132	176	246	59	122	162	226	
22.4	22.94	78	14236	117	0.0089	67	119	166	232	50	89	123	172	46	81	113	158	E3H (x3)
25	25.59	70	13961	103	0.0080	68	121	166	232	51	90	123	172	46	82	113	158	
28	29.03	62	13961	91	0.0069	70	126	166	232	52	94	123	172	48	86	113	158	
31.5	32.47	55	13961	81	0.0052	61	118	166	232	45	88	123	172	42	81	113	158	
35.5	36.22	50	13961	73	0.0047	60	118	166	232	44	88	123	172	41	81	113	158	
40	41.10	44	13961	64	0.0042	63	118	166	232	46	88	123	172	43	81	113	158	
45	45.46	40	13419	56	0.0040	57	118	166	232	43	88	123	172	39	81	113	158	
50	50.69	36	13961	52	0.0031	57	118	166	232	43	88	123	172	39	81	113	158	
56	57.52	31	13961	46	0.0028	57	118	166	232	43	88	123	172	39	81	113	158	
63	63.62	28	13419	40	0.0027	57	118	166	232	43	88	123	172	39	81	113	158	
71	74.72	24	13689	35	0.0015	57	118	166	232	43	88	123	172	39	81	113	158	
80	83.34	22	13689	31	0.0014	57	118	166	232	43	88	123	172	39	81	113	158	
90	94.57	19	13689	27	0.0013	57	118	166	232	43	88	123	172	39	81	113	158	
100	104.61	17	13152	24	0.0013	57	118	166	232	43	88	123	172	39	81	113	158	
112	114.05	16	13689	23	0.0010	57	118	166	232	43	88	123	172	39	81	113	158	
125	129.41	14	13689	20	0.0009	57	118	166	232	43	88	123	172	39	81	113	158	
140	143.15	13	13152	17	0.0009	57	118	166	232	43	88	123	172	39	81	113	158	
125	134.73	13	13689	19	0.0012	43	89	124	174	32	66	92	129	29	61	85	119	E4H (x4)
140	150.28	12	13689	17	0.0011	43	89	124	174	32	66	92	129	29	61	85	119	
160	170.52	11	13689	15	0.0011	43	89	124	174	32	66	92	129	29	61	85	119	
180	188.63	10	13152	13	0.0011	43	89	124	174	32	66	92	129	29	61	85	119	
200	208.3	9	13689	12	0.0006	43	89	124	174	32	66	92	129	29	61	85	119	
224	232.34	8	13689	11	0.0006	43	89	124	174	32	66	92	129	29	61	85	119	
250	263.63	7	13689	10	0.0006	43	89	124	174	32	66	92	129	29	61	85	119	
280	291.62	6	12888	8	0.0006	43	89	124	174	32	66	92	129	29	61	85	119	
315	336.83	5	13689	8	0.0003	43	89	124	174	32	66	92	129	29	61	85	119	
355	375.70	5	13689	7	0.0003	43	89	124	174	32	66	92	129	29	61	85	119	
400	426.30	4	13419	6	0.0003	43	89	124	174	32	66	92	129	29	61	85	119	
450	471.56	4	12888	5	0.0003	43	89	124	174	32	66	92	129	29	61	85	119	

E2H / E3H / E4H ...22 — MONOBLOCK HOUSING — 50 Hz — 20 kNm

n_1 = 1000 rpm

i_N	i_{eff}	n_2 [rpm]	T_{2N} [Nm]	P_N [kW]	J [Kgm²]	R1 P_{t0} [kW]	R1	R1 H_2O	R1 +H_2O	S5 P_{t0} [kW]	S5	S5 H_2O	S5 +H_2O	T6 P_{t0} [kW]	T6	T6 H_2O	T6 +H_2O	Type
4	3.95	253	16915	448	0.1097	113	173	275	335	84	128	204	249	77	118	188	229	E2H (x2)
4.5	4.44	225	17427	411	0.0923	113	179	275	334	84	133	204	248	77	122	188	228	
5	5.01	200	18453	386	0.0775	113	184	275	330	84	136	204	245	77	125	188	225	
5.6	5.66	177	18709	346	0.0649	125	188	277	324	93	139	206	241	85	128	189	221	
6.3	6.29	159	17812	297	0.0560	132	192	276	322	98	142	205	239	90	131	189	220	
7.1	7.18	139	18581	271	0.0463	130	185	275	307	97	138	204	228	89	126	188	210	
8	7.86	127	20174	269	0.0436	124	174	275	302	92	130	204	224	85	119	188	206	
9	8.90	112	19606	231	0.0341	121	168	275	302	90	125	204	224	82	115	188	206	
10	9.80	102	19792	211	0.0329	116	158	275	302	86	118	204	224	79	108	188	206	
11.2	11.31	88	19792	183	0.0252	113	158	275	302	84	117	204	224	77	108	188	206	
12.5	12.57	80	19792	165	0.0230	113	158	275	302	84	117	204	224	77	108	188	206	
14	14.02	71	19792	148	0.0201	113	158	275	302	84	117	204	224	77	108	188	206	
16	15.71	64	19792	132	0.0160	113	158	275	302	84	117	204	224	77	108	188	206	
18	17.29	58	19413	118	0.0143	113	158	275	302	84	117	204	224	77	108	188	206	
20	19.61	51	19413	104	0.0184	77	105	162	186	57	78	120	139	52	72	110	127	E3H (x3)
22.4	21.87	46	19413	93	0.0172	86	105	162	186	64	78	120	139	59	72	110	127	
25	24.51	41	19413	83	0.0156	76	105	162	186	56	78	120	139	52	72	110	127	
28	26.97	37	19413	75	0.0149	76	105	162	186	56	78	120	139	52	72	110	127	
31.5	31.43	32	19413	65	0.0104	76	105	162	186	56	78	120	139	52	72	110	127	
35.5	35.05	29	19413	58	0.0100	76	105	162	186	56	78	120	139	52	72	110	127	
40	39.29	25	19038	51	0.0093	76	105	162	186	56	78	120	139	52	72	110	127	
45	43.21	23	19038	46	0.0090	76	105	162	186	56	78	120	139	52	72	110	127	
50	49.32	20	19038	40	0.0051	76	105	162	186	56	78	120	139	52	72	110	127	
56	55.01	18	19038	36	0.0049	76	105	162	186	56	78	120	139	52	72	110	127	
63	61.65	16	19038	32	0.0046	76	105	162	186	56	78	120	139	52	72	110	127	
71	67.81	15	19038	29	0.0045	76	105	162	186	56	78	120	139	52	72	110	127	
71	67.64	15	18068	28	0.0070	74	95	140	163	55	71	104	121	50	65	96	112	E4H (x4)
80	75.44	13	19038	26	0.0069	71	93	137	159	53	69	102	118	49	63	93	109	
90	84.55	12	19038	24	0.0068	73	95	140	163	54	71	104	121	50	65	96	111	
100	95.74	10	18196	20	0.0042	57	79	122	140	42	59	90	104	39	54	83	96	
112	106.78	9	19038	19	0.0042	57	79	122	140	42	59	90	104	39	54	83	96	
125	119.67	8	18667	16	0.0041	57	79	122	140	42	59	90	104	39	54	83	96	
140	131.64	8	18667	15	0.0041	57	79	122	140	42	59	90	104	39	54	83	96	
160	149.45	7	19038	13	0.0028	57	79	122	140	42	59	90	104	39	54	83	96	
180	167.49	6	18667	12	0.0028	57	79	122	140	42	59	90	104	39	54	83	96	
200	184.24	5	18667	11	0.0028	57	79	122	140	42	59	90	104	39	54	83	96	
224	220.31	5	18324	9	0.0013	57	79	122	140	42	59	90	104	39	54	83	96	
250	245.73	4	18667	8	0.0013	57	79	122	140	42	59	90	104	39	54	83	96	
280	275.39	4	18667	7	0.0013	57	79	122	140	42	59	90	104	39	54	83	96	
315	302.93	3	18667	6	0.0013	57	79	122	140	42	59	90	104	39	54	83	96	
355	336.27	3	18667	6	0.0009	57	79	122	140	42	59	90	104	39	54	83	96	
400	376.85	3	18299	5	0.0009	57	79	122	140	42	59	90	104	39	54	83	96	
450	414.54	2	18299	5	0.0009	57	79	122	140	42	59	90	104	39	54	83	96	

E2H / E3H / E4H ...22 — MONOBLOCK HOUSING — 50 Hz — 20 kNm

n_1 = 1500 rpm

i_N	i_{eff}	n_2 [rpm]	T_{2N} [Nm]	P_N [kW]	J [Kgm²]	R1 P_{t0} [kW]	R1	R1 H_2O	R1 +H_2O	S5 P_{t0} [kW]	S5	S5 H_2O	S5 +H_2O	T6 P_{t0} [kW]	T6	T6 H_2O	T6 +H_2O	Type
4	3.95	380	16915	673	0.1097	108	230	262	399	80	171	195	297	74	157	179	273	
4.5	4.44	338	17427	617	0.0923	108	239	262	398	80	178	195	296	74	163	179	272	
5	5.01	299	18453	579	0.0775	108	245	262	393	80	182	195	292	74	167	179	268	
5.6	5.66	265	18709	519	0.0649	119	250	264	386	88	186	196	286	81	171	180	263	
6.3	6.29	238	17812	445	0.0560	126	255	263	383	94	190	195	284	86	174	180	261	
7.1	7.18	209	18581	407	0.0463	124	247	262	366	92	183	195	272	85	169	179	250	
8	7.86	191	20174	403	0.0436	118	233	262	359	88	173	195	267	81	159	179	245	E2H (x2)
9	8.90	169	19606	346	0.0341	115	224	262	359	85	166	195	267	78	153	179	245	
10	9.80	153	19792	317	0.0329	110	211	262	359	82	157	195	267	75	144	179	245	
11.2	11.31	133	19792	275	0.0252	108	210	262	359	80	156	195	267	74	143	179	245	
12.5	12.57	119	19792	247	0.0230	108	210	262	359	80	156	195	267	74	143	179	245	
14	14.02	107	19792	222	0.0201	108	210	262	359	80	156	195	267	74	143	179	245	
16	15.71	95	19792	198	0.0160	108	210	262	359	80	156	195	267	74	143	179	245	
18	17.29	87	19413	176	0.0143	108	210	262	359	80	156	195	267	74	143	179	245	
20	19.61	76	19413	156	0.0184	73	140	154	222	54	104	114	165	50	96	105	152	
22.4	21.87	69	19413	139	0.0172	82	140	154	222	61	104	114	165	56	96	105	152	
25	24.51	61	19413	124	0.0156	72	140	154	222	53	104	114	165	49	96	105	152	
28	26.97	56	19413	113	0.0149	72	140	154	222	53	104	114	165	49	96	105	152	
31.5	31.43	48	19413	97	0.0104	72	140	154	222	53	104	114	165	49	96	105	152	
35.5	35.05	43	19413	87	0.0100	72	140	154	222	53	104	114	165	49	96	105	152	
40	39.29	38	19038	76	0.0093	72	140	154	222	53	104	114	165	49	96	105	152	E3H (x3)
45	43.21	35	19038	69	0.0090	72	140	154	222	53	104	114	165	49	96	105	152	
50	49.32	30	19038	61	0.0051	72	140	154	222	53	104	114	165	49	96	105	152	
56	55.01	27	19038	54	0.0049	72	140	154	222	53	104	114	165	49	96	105	152	
63	61.65	24	19038	49	0.0046	72	140	154	222	53	104	114	165	49	96	105	152	
71	67.81	22	19038	44	0.0045	72	140	154	222	53	104	114	165	49	96	105	152	
71	67.64	22	18068	42	0.0070	70	127	134	194	52	94	99	145	48	87	91	133	
80	75.44	20	19038	40	0.0069	68	124	130	189	51	92	97	141	47	85	89	129	
90	84.55	18	19038	35	0.0068	70	127	133	194	52	94	99	144	48	87	91	132	
100	95.74	16	18196	30	0.0042	54	105	116	167	40	78	86	124	37	72	79	114	
112	106.78	14	19038	28	0.0042	54	105	116	167	40	78	86	124	37	72	79	114	
125	119.67	13	18667	25	0.0041	54	105	116	167	40	78	86	124	37	72	79	114	
140	131.64	11	18667	22	0.0041	54	105	116	167	40	78	86	124	37	72	79	114	
160	149.45	10	19038	20	0.0028	54	105	116	167	40	78	86	124	37	72	79	114	
180	167.49	9	18667	18	0.0028	54	105	116	167	40	78	86	124	37	72	79	114	E4H (x4)
200	184.24	8	18667	16	0.0028	54	105	116	167	40	78	86	124	37	72	79	114	
224	220.31	7	18324	13	0.0013	54	105	116	167	40	78	86	124	37	72	79	114	
250	245.73	6	18667	12	0.0013	54	105	116	167	40	78	86	124	37	72	79	114	
280	275.39	5	18667	11	0.0013	54	105	116	167	40	78	86	124	37	72	79	114	
315	302.93	5	18667	10	0.0013	54	105	116	167	40	78	86	124	37	72	79	114	
355	336.27	4	18667	9	0.0009	54	105	116	167	40	78	86	124	37	72	79	114	
400	376.85	4	18299	8	0.0009	54	105	116	167	40	78	86	124	37	72	79	114	
450	414.54	4	18299	7	0.0009	54	105	116	167	40	78	86	124	37	72	79	114	

E2H / E3H / E4H ...22 — MONOBLOCK HOUSING — 60 Hz — 20 kNm

n_1 = 1200 rpm

i_N	i_{eff}	n_2 [rpm]	T_{2N} [Nm]	P_N [kW]	J [Kgm²]	R1 P_{t0} [kW]	R1	R1 H_2O	R1 +H_2O	S5 P_{t0} [kW]	S5	S5 H_2O	S5 +H_2O	T6 P_{t0} [kW]	T6	T6 H_2O	T6 +H_2O	Type
4	3.95	304	16915	538	0.1097	111	198	270	359	83	147	201	267	76	135	184	245	E2H (x2)
4.5	4.44	270	17427	493	0.0923	111	206	270	358	83	153	201	266	76	140	184	244	
5	5.01	240	18453	463	0.0775	111	211	270	354	83	156	201	263	76	144	184	242	
5.6	5.66	212	18709	415	0.0649	122	215	272	347	91	160	202	258	84	147	186	237	
6.3	6.29	191	17812	356	0.0560	130	220	271	344	97	163	201	256	89	150	185	235	
7.1	7.18	167	18581	325	0.0463	128	212	270	329	95	158	201	244	87	145	184	225	
8	7.86	153	20174	323	0.0436	122	200	270	323	90	149	201	240	83	137	184	221	
9	8.90	135	19606	277	0.0341	118	192	270	323	88	143	201	240	81	131	184	221	
10	9.80	122	19792	254	0.0329	114	182	270	323	85	135	201	240	78	124	184	221	
11.2	11.31	106	19792	220	0.0252	111	181	270	323	83	134	201	240	76	123	184	221	
12.5	12.57	95	19792	198	0.0230	111	181	270	323	83	134	201	240	76	123	184	221	
14	14.02	86	19792	177	0.0201	111	181	270	323	83	134	201	240	76	123	184	221	
16	15.71	76	19792	158	0.0160	111	181	270	323	83	134	201	240	76	123	184	221	
18	17.29	69	19413	141	0.0143	111	181	270	323	83	134	201	240	76	123	184	221	
20	19.61	61	19413	124	0.0184	75	120	159	200	56	89	118	148	51	82	108	136	E3H (x3)
22.4	21.87	55	19413	112	0.0172	85	120	159	200	63	89	118	148	58	82	108	136	
25	24.51	49	19413	100	0.0156	74	120	159	200	55	89	118	148	51	82	108	136	
28	26.97	44	19413	90	0.0149	74	120	159	200	55	89	118	148	51	82	108	136	
31.5	31.43	38	19413	78	0.0104	74	120	159	200	55	89	118	148	51	82	108	136	
35.5	35.05	34	19413	70	0.0100	74	120	159	200	55	89	118	148	51	82	108	136	
40	39.29	31	19038	61	0.0093	74	120	159	200	55	89	118	148	51	82	108	136	
45	43.21	28	19038	55	0.0090	74	120	159	200	55	89	118	148	51	82	108	136	
50	49.32	24	19038	49	0.0051	74	120	159	200	55	89	118	148	51	82	108	136	
56	55.01	22	19038	43	0.0049	74	120	159	200	55	89	118	148	51	82	108	136	
63	61.65	19	19038	39	0.0046	74	120	159	200	55	89	118	148	51	82	108	136	
71	67.81	18	19038	35	0.0045	74	120	159	200	55	89	118	148	51	82	108	136	
71	67.64	18	18068	34	0.0070	72	109	138	175	54	81	102	130	49	75	94	120	E4H (x4)
80	75.44	16	19038	32	0.0069	70	106	134	170	52	79	100	127	48	73	92	116	
90	84.55	14	19038	28	0.0068	72	109	137	174	53	81	102	130	49	74	94	119	
100	95.74	13	18196	24	0.0042	56	90	119	150	41	67	89	111	38	62	82	102	
112	106.78	11	19038	22	0.0042	56	90	119	150	41	67	89	111	38	62	82	102	
125	119.67	10	18667	20	0.0041	56	90	119	150	41	67	89	111	38	62	82	102	
140	131.64	9	18667	18	0.0041	56	90	119	150	41	67	89	111	38	62	82	102	
160	149.45	8	19038	16	0.0028	56	90	119	150	41	67	89	111	38	62	82	102	
180	167.49	7	18667	14	0.0028	56	90	119	150	41	67	89	111	38	62	82	102	
200	184.24	7	18667	13	0.0028	56	90	119	150	41	67	89	111	38	62	82	102	
224	220.31	5	18324	10	0.0013	56	90	119	150	41	67	89	111	38	62	82	102	
250	245.73	5	18667	10	0.0013	56	90	119	150	41	67	89	111	38	62	82	102	
280	275.39	4	18667	9	0.0013	56	90	119	150	41	67	89	111	38	62	82	102	
315	302.93	4	18667	8	0.0013	56	90	119	150	41	67	89	111	38	62	82	102	
355	336.27	4	18667	7	0.0009	56	90	119	150	41	67	89	111	38	62	82	102	
400	376.85	3	18299	6	0.0009	56	90	119	150	41	67	89	111	38	62	82	102	
450	414.54	3	18299	6	0.0009	56	90	119	150	41	67	89	111	38	62	82	102	

E2H / E3H / E4H ...22 — MONOBLOCK HOUSING — 60 Hz — 20 kNm

n_1 = 1800 rpm

i_N	i_{eff}	n_2 [rpm]	T_{2N} [Nm]	P_N [kW]	J [Kgm²]	R1 P_{t0} [kW]	R1	R1 H_2O	R1 +H_2O	S5 P_{t0} [kW]	S5	S5 H_2O	S5 +H_2O	T6 P_{t0} [kW]	T6	T6 H_2O	T6 +H_2O	Type
4	3.95	456	16915	807	0.1097	105	237	254	407	78	176	189	302	72	162	174	278	E2H (x2)
4.5	4.44	405	17427	740	0.0923	105	246	254	406	78	183	189	301	72	168	174	277	
5	5.01	359	18453	694	0.0775	105	252	254	401	78	187	189	298	72	172	174	274	
5.6	5.66	318	18709	623	0.0649	115	258	256	393	86	191	190	292	79	176	175	269	
6.3	6.29	286	17812	534	0.0560	122	263	255	390	91	195	190	290	84	180	174	267	
7.1	7.18	251	18581	488	0.0463	120	254	254	373	89	189	189	277	82	174	174	255	
8	7.86	229	20174	484	0.0436	114	240	254	366	85	178	189	272	78	164	174	250	
9	8.90	202	19606	415	0.0341	111	231	254	366	83	171	189	272	76	157	174	250	
10	9.80	184	19792	381	0.0329	107	218	254	366	80	162	189	272	73	149	174	250	
11.2	11.31	159	19792	330	0.0252	105	216	254	366	78	161	189	272	72	148	174	250	
12.5	12.57	143	19792	297	0.0230	105	216	254	366	78	161	189	272	72	148	174	250	
14	14.02	128	19792	266	0.0201	105	216	254	366	78	161	189	272	72	148	174	250	
16	15.71	115	19792	237	0.0160	105	216	254	366	78	161	189	272	72	148	174	250	
18	17.29	104	19413	212	0.0143	105	216	254	366	78	161	189	272	72	148	174	250	
20	19.61	92	19413	187	0.0184	71	144	149	226	53	107	111	168	48	98	102	155	E3H (x3)
22.4	21.87	82	19413	167	0.0172	80	144	149	226	59	107	111	168	55	98	102	155	
25	24.51	73	19413	149	0.0156	70	144	149	226	52	107	111	168	48	98	102	155	
28	26.97	67	19413	136	0.0149	70	144	149	226	52	107	111	168	48	98	102	155	
31.5	31.43	57	19413	116	0.0104	70	144	149	226	52	107	111	168	48	98	102	155	
35.5	35.05	51	19413	104	0.0100	70	144	149	226	52	107	111	168	48	98	102	155	
40	39.29	46	19038	91	0.0093	70	144	149	226	52	107	111	168	48	98	102	155	
45	43.21	42	19038	83	0.0090	70	144	149	226	52	107	111	168	48	98	102	155	
50	49.32	36	19038	73	0.0051	70	144	149	226	52	107	111	168	48	98	102	155	
56	55.01	33	19038	65	0.0049	70	144	149	226	52	107	111	168	48	98	102	155	
63	61.65	29	19038	58	0.0046	70	144	149	226	52	107	111	168	48	98	102	155	
71	67.81	27	19038	53	0.0045	70	144	149	226	52	107	111	168	48	98	102	155	
71	67.64	27	18068	50	0.0070	68	131	130	198	50	97	96	147	46	89	89	135	E4H (x4)
80	75.44	24	19038	48	0.0069	66	127	126	193	49	95	94	144	45	87	86	132	
90	84.55	21	19038	42	0.0068	68	131	129	198	50	97	96	147	46	89	88	135	
100	95.74	19	18196	36	0.0042	52	108	113	170	39	80	84	126	36	74	77	116	
112	106.78	17	19038	34	0.0042	52	108	113	170	39	80	84	126	36	74	77	116	
125	119.67	15	18667	29	0.0041	52	108	113	170	39	80	84	126	36	74	77	116	
140	131.64	14	18667	27	0.0041	52	108	113	170	39	80	84	126	36	74	77	116	
160	149.45	12	19038	24	0.0028	52	108	113	170	39	80	84	126	36	74	77	116	
180	167.49	11	18667	21	0.0028	52	108	113	170	39	80	84	126	36	74	77	116	
200	184.24	10	18667	19	0.0028	52	108	113	170	39	80	84	126	36	74	77	116	
224	220.31	8	18324	16	0.0013	52	108	113	170	39	80	84	126	36	74	77	116	
250	245.73	7	18667	14	0.0013	52	108	113	170	39	80	84	126	36	74	77	116	
280	275.39	7	18667	13	0.0013	52	108	113	170	39	80	84	126	36	74	77	116	
315	302.93	6	18667	12	0.0013	52	108	113	170	39	80	84	126	36	74	77	116	
355	336.27	5	18667	10	0.0009	52	108	113	170	39	80	84	126	36	74	77	116	
400	376.85	5	18299	9	0.0009	52	108	113	170	39	80	84	126	36	74	77	116	
450	414.54	4	18299	8	0.0009	52	108	113	170	39	80	84	126	36	74	77	116	

E2H / E3H / E4H ...25 — MONOBLOCK HOUSING — 50 Hz — 30 kNm

n_1 = 1000 rpm

i_N	i_{eff}	n_2 [rpm]	T_{2N} [Nm]	P_N [kW]	J [Kgm²]	R1 P_{t0} [kW]	R1	R1 H_2O	R1 +H_2O	S5 P_{t0} [kW]	S5	S5 H_2O	S5 +H_2O	T6 P_{t0} [kW]	T6	T6 H_2O	T6 +H_2O	Type
5.6	5.39	186	23137	450	0.1513	137	233	447	500	101	173	332	371	93	159	305	341	E2H x2
6.3	6.06	165	23849	412	0.1252	148	241	446	494	110	179	331	367	101	164	305	337	
7.1	6.83	146	25095	385	0.1035	157	239	442	484	117	178	328	360	107	163	302	331	
8	7.71	130	25451	346	0.0852	154	233	428	469	115	173	318	349	105	159	292	321	
9	8.57	117	24383	298	0.0725	161	232	423	464	120	172	314	345	110	158	289	317	
10	9.80	102	25273	270	0.0589	160	225	408	448	119	167	303	333	109	154	279	306	
11.2	10.71	93	29644	290	0.0542	153	213	402	423	114	158	299	314	104	145	275	289	
12.5	12.14	82	26696	230	0.0423	153	207	402	413	114	154	299	307	105	142	275	282	
14	13.36	75	29644	232	0.0397	144	193	402	408	107	144	299	303	98	132	275	279	
16	15.43	65	29098	197	0.0303	137	189	402	408	102	140	299	303	94	129	275	279	
18	17.14	58	29098	178	0.0271	137	189	402	408	102	140	299	303	94	129	275	279	
20	19.12	52	28556	156	0.0234	137	189	402	408	101	140	299	303	93	129	275	279	
22.4	21.43	47	26963	132	0.0187	137	189	402	408	101	140	299	303	93	129	275	279	
25	23.57	42	26963	120	0.0165	137	189	402	408	101	140	299	303	93	129	275	279	
25	26.74	37	29098	114	0.0201	100	126	315	321	75	94	234	238	69	86	215	219	E3H x3
28	29.83	34	28020	98	0.0186	103	126	315	321	77	94	234	238	71	86	215	219	
31.5	33.43	30	26442	83	0.0167	91	126	315	321	68	94	234	238	62	86	215	219	
35.5	36.77	27	26442	75	0.0158	90	126	315	321	67	94	234	238	62	86	215	219	
40	42.86	23	28556	70	0.0111	90	126	315	321	67	94	234	238	62	86	215	219	
45	47.80	21	28020	61	0.0105	90	126	315	321	67	94	234	238	62	86	215	219	
50	53.57	19	26442	52	0.0097	90	126	315	321	67	94	234	238	62	86	215	219	
56	58.93	17	25926	46	0.0094	90	126	315	321	67	94	234	238	62	86	215	219	
63	67.25	15	28556	44	0.0053	90	126	315	321	67	94	234	238	62	86	215	219	
71	75.01	13	27489	38	0.0051	90	126	315	321	67	94	234	238	62	86	215	219	
80	84.07	12	25926	32	0.0048	90	126	315	321	67	94	234	238	62	86	215	219	
90	92.47	11	25926	29	0.0047	90	126	315	321	67	94	234	238	62	86	215	219	
90	92.24	11	24739	28	0.0072	68	95	236	241	51	70	176	179	47	65	161	164	E4H x4
100	102.88	10	27052	28	0.0070	86	112	236	250	64	83	176	186	59	77	161	171	
112	115.30	9	25926	24	0.0069	88	115	242	256	65	86	180	190	60	79	165	175	
125	130.55	8	24917	20	0.0043	68	95	236	241	51	70	176	179	47	65	161	164	
140	145.61	7	26963	19	0.0042	68	95	236	241	51	70	176	179	47	65	161	164	
160	163.19	6	25415	16	0.0042	68	95	236	241	51	70	176	179	47	65	161	164	
180	179.51	6	25415	15	0.0041	68	95	236	241	51	70	176	179	47	65	161	164	
200	203.80	5	26963	14	0.0029	68	95	236	241	51	70	176	179	47	65	161	164	
224	228.39	4	25415	12	0.0028	68	95	236	241	51	70	176	179	47	65	161	164	
250	251.23	4	25415	11	0.0028	68	95	236	241	51	70	176	179	47	65	161	164	
280	300.43	3	25095	9	0.0013	68	95	236	241	51	70	176	179	47	65	161	164	
315	335.09	3	26963	8	0.0013	68	95	236	241	51	70	176	179	47	65	161	164	
355	375.53	3	25415	7	0.0013	68	95	236	241	51	70	176	179	47	65	161	164	
400	413.09	2	25415	6	0.0013	68	95	236	241	51	70	176	179	47	65	161	164	
450	458.54	2	26442	6	0.0009	68	95	236	241	51	70	176	179	47	65	161	164	
500	513.89	2	24909	5	0.0009	68	95	236	241	51	70	176	179	47	65	161	164	
560	565.28	2	24909	5	0.0009	68	95	236	241	51	70	176	179	47	65	161	164	

E2H / E3H / E4H ...25 — MONOBLOCK HOUSING — 50 Hz — 30 kNm

n_1 = 1500 rpm

i_N	i_{eff}	n_2 [rpm]	T_{2N} [Nm]	P_N [kW]	J [Kgm²]	R1 P_{t0} [kW]	R1	R1 H_2O	R1 $+H_2O$	S5 P_{t0} [kW]	S5	S5 H_2O	S5 $+H_2O$	T6 P_{t0} [kW]	T6	T6 H_2O	T6 $+H_2O$	Type
5.6	5.39	278	23137	674	0.1513	130	310	425	595	97	231	316	442	89	212	290	406	E2H (x2)
6.3	6.06	248	23849	618	0.1252	141	321	425	588	105	238	316	437	96	219	290	401	
7.1	6.83	220	25095	577	0.1035	150	319	421	576	111	237	313	428	102	218	287	394	
8	7.71	195	25451	519	0.0852	147	311	407	559	109	231	303	415	100	213	278	382	
9	8.57	175	24383	447	0.0725	153	309	403	553	114	230	299	411	105	211	275	377	
10	9.80	153	25273	405	0.0589	153	300	389	533	113	223	289	396	104	205	266	364	
11.2	10.71	140	29644	435	0.0542	145	284	383	503	108	211	285	374	99	194	262	344	
12.5	12.14	124	26696	345	0.0423	146	276	383	491	108	205	285	365	100	189	262	336	
14	13.36	112	29644	349	0.0397	137	258	383	486	102	192	285	361	94	176	262	332	
16	15.43	97	29098	296	0.0303	131	252	383	486	97	187	285	361	89	172	262	332	
18	17.14	88	29098	267	0.0271	131	252	383	486	97	187	285	361	89	172	262	332	
20	19.12	78	28556	235	0.0234	130	252	383	486	97	187	285	361	89	172	262	332	
22.4	21.43	70	26963	198	0.0187	130	252	383	486	97	187	285	361	89	172	262	332	
25	23.57	64	26963	180	0.0165	130	252	383	486	97	187	285	361	89	172	262	332	
25	26.74	56	29098	171	0.0201	96	168	300	382	71	125	223	284	65	115	205	261	E3H (x3)
28	29.83	50	28020	148	0.0186	99	168	300	382	73	125	223	284	67	115	205	261	
31.5	33.43	45	26442	124	0.0167	87	168	300	382	64	125	223	284	59	115	205	261	
35.5	36.77	41	26442	113	0.0158	86	168	300	382	64	125	223	284	59	115	205	261	
40	42.86	35	28556	105	0.0111	86	168	300	382	64	125	223	284	59	115	205	261	
45	47.80	31	28020	92	0.0105	86	168	300	382	64	125	223	284	59	115	205	261	
50	53.57	28	26442	78	0.0097	86	168	300	382	64	125	223	284	59	115	205	261	
56	58.93	25	25926	69	0.0094	86	168	300	382	64	125	223	284	59	115	205	261	
63	67.25	22	28556	67	0.0053	86	168	300	382	64	125	223	284	59	115	205	261	
71	75.01	20	27489	58	0.0051	86	168	300	382	64	125	223	284	59	115	205	261	
80	84.07	18	25926	48	0.0048	86	168	300	382	64	125	223	284	59	115	205	261	
90	92.47	16	25926	44	0.0047	86	168	300	382	64	125	223	284	59	115	205	261	
90	92.24	16	24739	42	0.0072	65	126	225	287	48	94	167	213	44	86	154	196	E4H (x4)
100	102.88	15	27052	41	0.0070	82	150	225	298	61	111	167	221	56	102	154	203	
112	115.30	13	25926	35	0.0069	84	154	230	305	62	114	171	227	57	105	157	208	
125	130.55	11	24917	30	0.0043	65	126	225	287	48	94	167	213	44	86	154	196	
140	145.61	10	26963	29	0.0042	65	126	225	287	48	94	167	213	44	86	154	196	
160	163.19	9	25415	24	0.0042	65	126	225	287	48	94	167	213	44	86	154	196	
180	179.51	8	25415	22	0.0041	65	126	225	287	48	94	167	213	44	86	154	196	
200	203.80	7	26963	21	0.0029	65	126	225	287	48	94	167	213	44	86	154	196	
224	228.39	7	25415	17	0.0028	65	126	225	287	48	94	167	213	44	86	154	196	
250	251.23	6	25415	16	0.0028	65	126	225	287	48	94	167	213	44	86	154	196	
280	300.43	5	25095	13	0.0013	65	126	225	287	48	94	167	213	44	86	154	196	
315	335.09	4	26963	13	0.0013	65	126	225	287	48	94	167	213	44	86	154	196	
355	375.53	4	25415	11	0.0013	65	126	225	287	48	94	167	213	44	86	154	196	
400	413.09	4	25415	10	0.0013	65	126	225	287	48	94	167	213	44	86	154	196	
450	458.54	3	26442	9	0.0009	65	126	225	287	48	94	167	213	44	86	154	196	
500	513.89	3	24909	8	0.0009	65	126	225	287	48	94	167	213	44	86	154	196	
560	565.28	3	24909	7	0.0009	65	126	225	287	48	94	167	213	44	86	154	196	

E2H / E3H / E4H ...25 — MONOBLOCK HOUSING — 60 Hz — 30 kNm

n_1 = 1200 rpm

i_N	i_{eff}	n_2 [rpm]	T_{2N} [Nm]	P_N [kW]	J [Kgm²]	R1 P_{t0} [kW]	R1	R1 H_2O	R1 +H_2O	S5 P_{t0} [kW]	S5	S5 H_2O	S5 +H_2O	T6 P_{t0} [kW]	T6	T6 H_2O	T6 +H_2O	Type
5.6	5.39	223	23137	539	0.1513	134	267	438	535	99	198	325	398	91	182	299	366	E2H (x2)
6.3	6.06	198	23849	495	0.1252	145	276	438	529	108	205	325	393	99	189	299	361	
7.1	6.83	176	25095	462	0.1035	154	274	433	519	115	204	322	385	105	187	296	354	
8	7.71	156	25451	415	0.0852	151	268	420	503	113	199	312	374	103	183	287	343	
9	8.57	140	24383	358	0.0725	158	266	415	497	117	198	308	369	108	182	283	340	
10	9.80	122	25273	324	0.0589	157	258	400	480	117	192	298	357	107	176	273	328	
11.2	10.71	112	29644	348	0.0542	150	244	394	453	111	181	293	337	102	167	269	309	
12.5	12.14	99	26696	276	0.0423	150	238	394	442	112	177	293	329	103	162	269	302	
14	13.36	90	29644	279	0.0397	141	222	394	437	105	165	293	325	97	151	269	299	
16	15.43	78	29098	237	0.0303	135	217	394	437	100	161	293	325	92	148	269	299	
18	17.14	70	29098	213	0.0271	135	217	394	437	100	161	293	325	92	148	269	299	
20	19.12	63	28556	188	0.0234	134	217	394	437	99	161	293	325	91	148	269	299	
22.4	21.43	56	26963	158	0.0187	134	217	394	437	99	161	293	325	91	148	269	299	
25	23.57	51	26963	144	0.0165	134	217	394	437	99	161	293	325	91	148	269	299	
25	26.74	45	29098	137	0.0201	98	144	309	344	73	107	230	255	67	99	211	235	E3H (x3)
28	29.83	40	28020	118	0.0186	101	144	309	344	75	107	230	255	69	99	211	235	
31.5	33.43	36	26442	99	0.0167	89	144	309	344	66	107	230	255	61	99	211	235	
35.5	36.77	33	26442	90	0.0158	89	144	309	344	66	107	230	255	61	99	211	235	
40	42.86	28	28556	84	0.0111	89	144	309	344	66	107	230	255	61	99	211	235	
45	47.80	25	28020	74	0.0105	89	144	309	344	66	107	230	255	61	99	211	235	
50	53.57	22	26442	62	0.0097	89	144	309	344	66	107	230	255	61	99	211	235	
56	58.93	20	25926	55	0.0094	89	144	309	344	66	107	230	255	61	99	211	235	
63	67.25	18	28556	53	0.0053	89	144	309	344	66	107	230	255	61	99	211	235	
71	75.01	16	27489	46	0.0051	89	144	309	344	66	107	230	255	61	99	211	235	
80	84.07	14	25926	39	0.0048	89	144	309	344	66	107	230	255	61	99	211	235	
90	92.47	13	25926	35	0.0047	89	144	309	344	66	107	230	255	61	99	211	235	
90	92.24	13	24739	34	0.0072	67	108	232	258	50	81	172	192	46	74	158	176	E4H (x4)
100	102.88	12	27052	33	0.0070	84	129	232	268	62	96	172	199	57	88	158	183	
112	115.30	10	25926	28	0.0069	86	132	237	274	64	98	176	204	59	90	162	187	
125	130.55	9	24917	24	0.0043	67	108	232	258	50	81	172	192	46	74	158	176	
140	145.61	8	26963	23	0.0042	67	108	232	258	50	81	172	192	46	74	158	176	
160	163.19	7	25415	20	0.0042	67	108	232	258	50	81	172	192	46	74	158	176	
180	179.51	7	25415	18	0.0041	67	108	232	258	50	81	172	192	46	74	158	176	
200	203.80	6	26963	17	0.0029	67	108	232	258	50	81	172	192	46	74	158	176	
224	228.39	5	25415	14	0.0028	67	108	232	258	50	81	172	192	46	74	158	176	
250	251.23	5	25415	13	0.0028	67	108	232	258	50	81	172	192	46	74	158	176	
280	300.43	4	25095	10	0.0013	67	108	232	258	50	81	172	192	46	74	158	176	
315	335.09	4	26963	10	0.0013	67	108	232	258	50	81	172	192	46	74	158	176	
355	375.53	3	25415	9	0.0013	67	108	232	258	50	81	172	192	46	74	158	176	
400	413.09	3	25415	8	0.0013	67	108	232	258	50	81	172	192	46	74	158	176	
450	458.54	3	26442	7	0.0009	67	108	232	258	50	81	172	192	46	74	158	176	
500	513.89	2	24909	6	0.0009	67	108	232	258	50	81	172	192	46	74	158	176	
560	565.28	2	24909	6	0.0009	67	108	232	258	50	81	172	192	46	74	158	176	

E2H / E3H / E4H ...25 — MONOBLOCK HOUSING — 60 Hz — 30 kNm

n_1 = 1800 rpm

i_N	i_{eff}	n_2 [rpm]	T_{2N} [Nm]	P_N [kW]	J [Kgm²]	R1 P_{t0} [kW]	R1	R1 H_2O	R1 $+H_2O$	S5 P_{t0} [kW]	S5	S5 H_2O	S5 $+H_2O$	T6 P_{t0} [kW]	T6	T6 H_2O	T6 $+H_2O$	Type
5.6	5.39	334	23137	809	0.1513	126	320	413	607	94	238	307	451	86	218	282	414	
6.3	6.06	297	23849	742	0.1252	137	331	412	599	102	246	306	445	93	226	281	409	
7.1	6.83	264	25095	693	0.1035	145	328	408	588	108	244	303	437	99	224	279	401	
8	7.71	233	25451	622	0.0852	143	321	395	570	106	238	294	423	97	219	270	389	
9	8.57	210	24383	536	0.0725	149	319	391	564	111	237	290	419	102	218	267	385	
10	9.80	184	25273	486	0.0589	148	309	377	544	110	230	280	404	101	211	258	372	
11.2	10.71	168	29644	522	0.0542	141	292	372	513	105	217	276	381	96	200	254	351	**E2H** (x2)
12.5	12.14	148	26696	415	0.0423	141	285	372	501	105	211	276	372	97	194	254	342	
14	13.36	135	29644	418	0.0397	133	265	372	496	99	197	276	368	91	181	254	339	
16	15.43	117	29098	355	0.0303	127	260	372	496	94	193	276	368	87	177	254	339	
18	17.14	105	29098	320	0.0271	127	260	372	496	94	193	276	368	87	177	254	339	
20	19.12	94	28556	282	0.0234	126	260	372	496	94	193	276	368	86	177	254	339	
22.4	21.43	84	26963	237	0.0187	126	260	372	496	94	193	276	368	86	177	254	339	
25	23.57	76	26963	216	0.0165	126	260	372	496	94	193	276	368	86	177	254	339	
25	26.74	67	29098	205	0.0201	93	173	291	390	69	129	216	290	63	118	199	266	
28	29.83	60	28020	177	0.0186	96	173	291	390	71	129	216	290	65	118	199	266	
31.5	33.43	54	26442	149	0.0167	84	173	291	390	62	129	216	290	57	118	199	266	
35.5	36.77	49	26442	136	0.0158	83	173	291	390	62	129	216	290	57	118	199	266	
40	42.86	42	28556	126	0.0111	83	173	291	390	62	129	216	290	57	118	199	266	
45	47.80	38	28020	110	0.0105	83	173	291	390	62	129	216	290	57	118	199	266	
50	53.57	34	26442	93	0.0097	83	173	291	390	62	129	216	290	57	118	199	266	**E3H** (x3)
56	58.93	31	25926	83	0.0094	83	173	291	390	62	129	216	290	57	118	199	266	
63	67.25	27	28556	80	0.0053	83	173	291	390	62	129	216	290	57	118	199	266	
71	75.01	24	27489	69	0.0051	83	173	291	390	62	129	216	290	57	118	199	266	
80	84.07	21	25926	58	0.0048	83	173	291	390	62	129	216	290	57	118	199	266	
90	92.47	19	25926	53	0.0047	83	173	291	390	62	129	216	290	57	118	199	266	
90	92.24	20	24739	51	0.0072	63	130	218	292	47	96	162	217	43	89	149	200	
100	102.88	17	27052	50	0.0070	79	154	218	304	59	115	162	226	54	105	149	207	
112	115.30	16	25926	42	0.0069	81	158	223	311	60	118	166	231	56	108	153	212	
125	130.55	14	24917	36	0.0043	63	130	218	292	47	96	162	217	43	89	149	200	
140	145.61	12	26963	35	0.0042	63	130	218	292	47	96	162	217	43	89	149	200	
160	163.19	11	25415	29	0.0042	63	130	218	292	47	96	162	217	43	89	149	200	
180	179.51	10	25415	27	0.0041	63	130	218	292	47	96	162	217	43	89	149	200	
200	203.80	9	26963	25	0.0029	63	130	218	292	47	96	162	217	43	89	149	200	**E4H** (x4)
224	228.39	8	25415	21	0.0028	63	130	218	292	47	96	162	217	43	89	149	200	
250	251.23	7	25415	19	0.0028	63	130	218	292	47	96	162	217	43	89	149	200	
280	300.43	6	25095	16	0.0013	63	130	218	292	47	96	162	217	43	89	149	200	
315	335.09	5	26963	15	0.0013	63	130	218	292	47	96	162	217	43	89	149	200	
355	375.53	5	25415	13	0.0013	63	130	218	292	47	96	162	217	43	89	149	200	
400	413.09	4	25415	12	0.0013	63	130	218	292	47	96	162	217	43	89	149	200	
450	458.54	4	26442	11	0.0009	63	130	218	292	47	96	162	217	43	89	149	200	
500	513.89	4	24909	9	0.0009	63	130	218	292	47	96	162	217	43	89	149	200	
560	565.28	3	24909	8	0.0009	63	130	218	292	47	96	162	217	43	89	149	200	

E2H / E3H / E4H ...26 — MONOBLOCK HOUSING — 50 Hz — 36 kNm

	i_N	i_{eff}	n_2 [rpm]	T_{2N} [Nm]	P_N [kW]	J [Kgm²]	R1 P_{t0} [kW]	R1	R1 H_2O	R1 +H_2O	S5 P_{t0} [kW]	S5	S5 H_2O	S5 +H_2O	T6 P_{t0} [kW]	T6	T6 H_2O	T6 +H_2O	Type
n_1 = 1000 rpm	4	4.03	248	30142	783	0.3424	162	224	349	449	120	167	259	334	110	153	238	307	E2H (x2)
	4.5	4.52	221	30968	717	0.2806	162	224	349	466	120	167	259	346	110	153	238	318	
	5	5.10	196	32207	661	0.2349	162	240	349	473	120	178	259	351	110	164	238	323	
	5.6	5.76	174	33652	612	0.1961	162	240	349	469	120	179	259	349	110	164	238	320	
	6.3	6.40	156	30968	507	0.1678	162	258	359	470	120	192	267	349	110	176	245	321	
	7.1	7.31	137	32207	461	0.1381	162	259	364	455	120	193	270	338	110	177	249	311	
	8	8.00	125	36749	481	0.1258	162	251	358	436	120	187	266	324	110	171	244	298	
	9	9.07	110	33753	390	0.1028	167	254	354	425	124	189	263	316	114	173	242	291	
	10	9.98	100	33753	354	0.0929	163	239	349	398	121	177	259	296	111	163	238	272	
	11.2	11.52	87	33753	307	0.0748	162	230	349	383	120	171	259	284	110	157	238	261	
	12.5	12.80	78	36324	297	0.0662	162	224	349	382	120	167	259	284	110	153	238	261	
	14	14.28	70	36324	266	0.0581	162	224	349	382	120	167	259	284	110	153	238	261	
	16	16.23	62	36324	234	0.0445	162	224	349	382	120	167	259	284	110	153	238	261	
	18	18.22	55	36324	209	0.0397	162	224	349	382	120	167	259	284	110	153	238	261	
	16	16.10	62	36324	236	0.0582	108	160	273	300	80	119	203	223	74	109	186	205	E3H (x3)
	18	17.96	56	36324	212	0.0532	108	154	273	300	80	114	203	223	73	105	186	205	
	20	20.42	49	36324	186	0.0444	108	153	273	300	81	113	203	223	74	104	186	205	
	22.4	23.04	43	36324	165	0.0326	115	153	273	300	86	114	203	223	79	105	186	205	
	25	25.70	39	35672	145	0.0302	110	149	273	300	82	111	203	223	75	102	186	205	
	28	29.21	34	35672	128	0.0259	110	149	273	300	82	111	203	223	75	102	186	205	
	31.5	32.79	30	35672	114	0.0244	107	149	273	300	80	111	203	223	73	102	186	205	
	35.5	35.69	28	35672	105	0.0178	107	149	273	300	80	111	203	223	73	102	186	205	
	40	40.57	25	35672	92	0.0156	107	149	273	300	80	111	203	223	73	102	186	205	
	45	45.54	22	35672	82	0.0148	107	149	273	300	80	111	203	223	73	102	186	205	
	50	51.20	20	35672	73	0.0095	107	149	273	300	80	111	203	223	73	102	186	205	
	56	57.11	18	35027	64	0.0090	107	149	273	300	80	111	203	223	73	102	186	205	
	63	64.91	15	35027	57	0.0081	107	149	273	300	80	111	203	223	73	102	186	205	
	71	72.86	14	35027	50	0.0078	107	149	273	300	80	111	203	223	73	102	186	205	
	80	79.95	13	35027	46	0.0050	107	149	273	300	80	111	203	223	73	102	186	205	
	90	90.88	11	35027	40	0.0046	107	149	273	300	80	111	203	223	73	102	186	205	
	100	102.01	10	35027	36	0.0044	107	149	273	300	80	111	203	223	73	102	186	205	
	71	72.62	14	35027	51	0.0087	81	112	205	225	60	83	152	167	55	76	140	154	E4H (x4)
	80	80.99	12	35027	45	0.0084	81	112	205	225	60	83	152	167	55	76	140	154	
	90	92.07	11	35027	40	0.0080	81	112	205	225	60	83	152	167	55	76	140	154	
	100	102.78	10	35027	36	0.0050	81	112	205	225	60	83	152	167	55	76	140	154	
	112	114.64	9	35027	32	0.0049	81	112	205	225	60	83	152	167	55	76	140	154	
	125	130.31	8	35027	28	0.0047	81	112	205	225	60	83	152	167	55	76	140	154	
	140	146.26	7	35027	25	0.0046	81	112	205	225	60	83	152	167	55	76	140	154	
	160	160.45	6	35027	23	0.0032	81	112	205	225	60	83	152	167	55	76	140	154	
	180	182.38	5	35027	20	0.0031	81	112	205	225	60	83	152	167	55	76	140	154	
	200	204.71	5	35027	18	0.0031	81	112	205	225	60	83	152	167	55	76	140	154	
	224	236.52	4	34387	15	0.0015	81	112	205	225	60	83	152	167	55	76	140	154	
	250	263.81	4	34387	14	0.0014	81	112	205	225	60	83	152	167	55	76	140	154	
	280	299.87	3	34387	12	0.0014	81	112	205	225	60	83	152	167	55	76	140	154	
	315	336.58	3	34387	11	0.0014	81	112	205	225	60	83	152	167	55	76	140	154	
	355	361.00	3	34387	10	0.0010	81	112	205	225	60	83	152	167	55	76	140	154	
	400	410.35	2	34387	9	0.0009	81	112	205	225	60	83	152	167	55	76	140	154	
	450	460.59	2	31277	7	0.0009	81	112	205	225	60	83	152	167	55	76	140	154	

E2H / E3H / E4H ...26 — MONOBLOCK HOUSING — 50 Hz — 36 kNm

n_1 = 1500 rpm

i_N	i_{eff}	n_2 [rpm]	T_{2N} [Nm]	P_N [kW]	J [Kgm²]	R1 P_{t0} [kW]	R1	R1 H_2O	R1 $+H_2O$	S5 P_{t0} [kW]	S5	S5 H_2O	S5 $+H_2O$	T6 P_{t0} [kW]	T6	T6 H_2O	T6 $+H_2O$	Type
4	4.03	372	30142	1175	0.3424	154	299	332	535	114	222	247	397	105	204	227	365	E2H (x2)
4.5	4.52	332	30968	1076	0.2806	154	299	332	555	114	222	247	412	105	204	227	379	
5	5.10	294	32207	992	0.2349	154	320	332	563	114	238	247	418	105	219	227	384	
5.6	5.76	260	33652	918	0.1961	154	320	332	559	114	238	247	415	105	219	227	382	
6.3	6.40	234	30968	760	0.1678	154	344	342	560	114	255	254	416	105	235	234	382	
7.1	7.31	205	32207	692	0.1381	154	346	347	541	114	257	258	402	105	236	237	370	
8	8.00	188	36749	722	0.1258	154	335	341	520	114	249	253	386	105	229	233	355	
9	9.07	165	33753	585	0.1028	159	338	338	506	119	251	251	376	109	231	231	346	
10	9.98	150	33753	531	0.0929	155	318	332	474	115	236	247	352	106	217	227	324	
11.2	11.52	130	33753	460	0.0748	154	306	332	456	114	227	247	339	105	209	227	311	
12.5	12.80	117	36324	446	0.0662	154	299	332	455	114	222	247	338	105	204	227	311	
14	14.28	105	36324	400	0.0581	154	299	332	455	114	222	247	338	105	204	227	311	
16	16.23	92	36324	352	0.0445	154	299	332	455	114	222	247	338	105	204	227	311	
18	18.22	82	36324	313	0.0397	154	299	332	455	114	222	247	338	105	204	227	311	
16	16.10	93	36324	354	0.0582	103	214	260	357	76	159	193	265	70	146	178	244	E3H (x3)
18	17.96	84	36324	318	0.0532	102	205	260	357	76	153	193	265	70	140	178	244	
20	20.42	73	36324	279	0.0444	103	204	260	357	77	151	193	265	70	139	178	244	
22.4	23.04	65	36324	248	0.0326	110	204	260	357	82	152	193	265	75	140	178	244	
25	25.70	58	35672	218	0.0302	105	199	260	357	78	148	193	265	72	136	178	244	
28	29.21	51	35672	192	0.0259	105	199	260	357	78	148	193	265	72	136	178	244	
31.5	32.79	46	35672	171	0.0244	102	199	260	357	76	148	193	265	70	136	178	244	
35.5	35.69	42	35672	157	0.0178	102	199	260	357	76	148	193	265	70	136	178	244	
40	40.57	37	35672	138	0.0156	102	199	260	357	76	148	193	265	70	136	178	244	
45	45.54	33	35672	123	0.0148	102	199	260	357	76	148	193	265	70	136	178	244	
50	51.20	29	35672	109	0.0095	102	199	260	357	76	148	193	265	70	136	178	244	
56	57.11	26	35027	96	0.0090	102	199	260	357	76	148	193	265	70	136	178	244	
63	64.91	23	35027	85	0.0081	102	199	260	357	76	148	193	265	70	136	178	244	
71	72.86	21	35027	76	0.0078	102	199	260	357	76	148	193	265	70	136	178	244	
80	79.95	19	35027	69	0.0050	102	199	260	357	76	148	193	265	70	136	178	244	
90	90.88	17	35027	61	0.0046	102	199	260	357	76	148	193	265	70	136	178	244	
100	102.01	15	35027	54	0.0044	102	199	260	357	76	148	193	265	70	136	178	244	
71	72.62	21	35027	76	0.0087	77	149	195	268	57	111	145	199	53	102	133	183	E4H (x4)
80	80.99	19	35027	68	0.0084	77	149	195	268	57	111	145	199	53	102	133	183	
90	92.07	16	35027	60	0.0080	77	149	195	268	57	111	145	199	53	102	133	183	
100	102.78	15	35027	54	0.0050	77	149	195	268	57	111	145	199	53	102	133	183	
112	114.64	13	35027	48	0.0049	77	149	195	268	57	111	145	199	53	102	133	183	
125	130.31	12	35027	42	0.0047	77	149	195	268	57	111	145	199	53	102	133	183	
140	146.26	10	35027	38	0.0046	77	149	195	268	57	111	145	199	53	102	133	183	
160	160.45	9	35027	34	0.0032	77	149	195	268	57	111	145	199	53	102	133	183	
180	182.38	8	35027	30	0.0031	77	149	195	268	57	111	145	199	53	102	133	183	
200	204.71	7	35027	27	0.0031	77	149	195	268	57	111	145	199	53	102	133	183	
224	236.52	6	34387	23	0.0015	77	149	195	268	57	111	145	199	53	102	133	183	
250	263.81	6	34387	20	0.0014	77	149	195	268	57	111	145	199	53	102	133	183	
280	299.87	5	34387	18	0.0014	77	149	195	268	57	111	145	199	53	102	133	183	
315	336.58	4	34387	16	0.0014	77	149	195	268	57	111	145	199	53	102	133	183	
355	361.00	4	34387	15	0.0010	77	149	195	268	57	111	145	199	53	102	133	183	
400	410.35	4	34387	13	0.0009	77	149	195	268	57	111	145	199	53	102	133	183	
450	460.59	3	31277	11	0.0009	77	149	195	268	57	111	145	199	53	102	133	183	

E2H / E3H / E4H ...26 — MONOBLOCK HOUSING — 60 Hz — 36 kNm

	i_N	i_{eff}	n_2 [rpm]	T_{2N} [Nm]	P_N [kW]	J [Kgm²]	R1 P_{t0} [kW]	R1	R1 H_2O	R1 +H_2O	S5 P_{t0} [kW]	S5	S5 H_2O	S5 +H_2O	T6 P_{t0} [kW]	T6	T6 H_2O	T6 +H_2O	Type
n_1 = 1200 rpm	**4**	4.03	298	30142	940	0.3424	159	257	342	481	118	191	254	358	108	176	234	329	E2H (x2)
	4.5	4.52	265	30968	861	0.2806	159	257	342	499	118	191	254	371	108	176	234	341	
	5	5.10	235	32207	794	0.2349	159	275	342	507	118	205	254	376	108	188	234	346	
	5.6	5.76	208	33652	734	0.1961	159	276	342	503	118	205	254	374	108	188	234	343	
	6.3	6.40	188	30968	608	0.1678	159	296	352	504	118	220	262	374	108	202	241	344	
	7.1	7.31	164	32207	554	0.1381	159	297	357	487	118	221	265	362	108	203	244	333	
	8	8.00	150	36749	577	0.1258	159	288	351	468	118	214	261	347	108	197	240	319	
	9	9.07	132	33753	468	0.1028	164	291	348	456	122	216	258	339	112	199	237	311	
	10	9.98	120	33753	425	0.0929	160	274	342	427	119	203	254	317	109	187	234	291	
	11.2	11.52	104	33753	368	0.0748	159	263	342	410	118	196	254	305	108	180	234	280	
	12.5	12.80	94	36324	357	0.0662	159	257	342	410	118	191	254	304	108	176	234	280	
	14	14.28	84	36324	320	0.0581	159	257	342	410	118	191	254	304	108	176	234	280	
	16	16.23	74	36324	281	0.0445	159	257	342	410	118	191	254	304	108	176	234	280	
	18	18.22	66	36324	251	0.0397	159	257	342	410	118	191	254	304	108	176	234	280	
	16	16.10	75	36324	284	0.0582	106	184	268	321	79	136	199	239	72	125	183	219	E3H (x3)
	18	17.96	67	36324	254	0.0532	106	177	268	321	78	131	199	239	72	121	183	219	
	20	20.42	59	36324	224	0.0444	106	175	268	321	79	130	199	239	73	120	183	219	
	22.4	23.04	52	36324	198	0.0326	113	176	268	321	84	131	199	239	77	120	183	219	
	25	25.70	47	35672	174	0.0302	108	171	268	321	80	127	199	239	74	117	183	219	
	28	29.21	41	35672	153	0.0259	108	171	268	321	80	127	199	239	74	117	183	219	
	31.5	32.79	37	35672	137	0.0244	105	171	268	321	78	127	199	239	72	117	183	219	
	35.5	35.69	34	35672	126	0.0178	105	171	268	321	78	127	199	239	72	117	183	219	
	40	40.57	30	35672	110	0.0156	105	171	268	321	78	127	199	239	72	117	183	219	
	45	45.54	26	35672	98	0.0148	105	171	268	321	78	127	199	239	72	117	183	219	
	50	51.20	23	35672	88	0.0095	105	171	268	321	78	127	199	239	72	117	183	219	
	56	57.11	21	35027	77	0.0090	105	171	268	321	78	127	199	239	72	117	183	219	
	63	64.91	18	35027	68	0.0081	105	171	268	321	78	127	199	239	72	117	183	219	
	71	72.86	16	35027	60	0.0078	105	171	268	321	78	127	199	239	72	117	183	219	
	80	79.95	15	35027	55	0.0050	105	171	268	321	78	127	199	239	72	117	183	219	
	90	90.88	13	35027	48	0.0046	105	171	268	321	78	127	199	239	72	117	183	219	
	100	102.01	12	35027	43	0.0044	105	171	268	321	78	127	199	239	72	117	183	219	
	71	72.62	17	35027	61	0.0087	79	128	201	241	59	95	149	179	54	88	137	165	E4H (x4)
	80	80.99	15	35027	54	0.0084	79	128	201	241	59	95	149	179	54	88	137	165	
	90	92.07	13	35027	48	0.0080	79	128	201	241	59	95	149	179	54	88	137	165	
	100	102.78	12	35027	43	0.0050	79	128	201	241	59	95	149	179	54	88	137	165	
	112	114.64	10	35027	38	0.0049	79	128	201	241	59	95	149	179	54	88	137	165	
	125	130.31	9	35027	34	0.0047	79	128	201	241	59	95	149	179	54	88	137	165	
	140	146.26	8	35027	30	0.0046	79	128	201	241	59	95	149	179	54	88	137	165	
	160	160.45	7	35027	27	0.0032	79	128	201	241	59	95	149	179	54	88	137	165	
	180	182.38	7	35027	24	0.0031	79	128	201	241	59	95	149	179	54	88	137	165	
	200	204.71	6	35027	22	0.0031	79	128	201	241	59	95	149	179	54	88	137	165	
	224	236.52	5	34387	18	0.0015	79	128	201	241	59	95	149	179	54	88	137	165	
	250	263.81	5	34387	16	0.0014	79	128	201	241	59	95	149	179	54	88	137	165	
	280	299.87	4	34387	14	0.0014	79	128	201	241	59	95	149	179	54	88	137	165	
	315	336.58	4	34387	13	0.0014	79	128	201	241	59	95	149	179	54	88	137	165	
	355	361.00	3	34387	12	0.0010	79	128	201	241	59	95	149	179	54	88	137	165	
	400	410.35	3	34387	11	0.0009	79	128	201	241	59	95	149	179	54	88	137	165	
	450	460.59	3	31277	9	0.0009	79	128	201	241	59	95	149	179	54	88	137	165	

E2H / E3H / E4H ...26 — MONOBLOCK HOUSING — 60 Hz — 36 kNm

	i_N	i_{eff}	n_2 [rpm]	T_{2N} [Nm]	P_N [kW]	J [Kgm²]	R1 P_{t0} [kW]	R1	R1 H_2O	R1 $+H_2O$	S5 P_{t0} [kW]	S5	S5 H_2O	S5 $+H_2O$	T6 P_{t0} [kW]	T6	T6 H_2O	T6 $+H_2O$	Type
n_1 = 1800 rpm	4	4.03	447	30142	1410	0.3424	149	308	322	545	111	229	239	405	102	210	220	372	E2H (x2)
	4.5	4.52	398	30968	1291	0.2806	149	308	322	566	111	229	239	421	102	210	220	387	
	5	5.10	353	32207	1190	0.2349	149	330	322	574	111	245	239	427	102	225	220	392	
	5.6	5.76	313	33652	1101	0.1961	149	330	322	570	111	245	239	423	102	225	220	389	
	6.3	6.40	281	30968	912	0.1678	149	354	332	571	111	263	246	424	102	242	227	390	
	7.1	7.31	246	32207	830	0.1381	149	356	336	552	111	265	250	410	102	243	230	377	
	8	8.00	225	36749	866	0.1258	149	345	330	530	111	256	246	394	102	236	226	362	
	9	9.07	198	33753	701	0.1028	155	349	327	516	115	259	243	384	106	238	224	353	
	10	9.98	180	33753	638	0.0929	151	328	322	484	112	244	239	359	103	224	220	330	
	11.2	11.52	156	33753	552	0.0748	149	315	322	465	111	234	239	345	102	215	220	317	
	12.5	12.80	141	36324	535	0.0662	149	308	322	464	111	229	239	345	102	210	220	317	
	14	14.28	126	36324	479	0.0581	149	308	322	464	111	229	239	345	102	210	220	317	
	16	16.23	111	36324	422	0.0445	149	308	322	464	111	229	239	345	102	210	220	317	
	18	18.22	99	36324	376	0.0397	149	308	322	464	111	229	239	345	102	210	220	317	
	16	16.10	112	36324	425	0.0582	100	220	252	364	74	163	187	271	68	150	172	249	E3H (x3)
	18	17.96	100	36324	381	0.0532	99	211	252	364	74	157	187	271	68	144	172	249	
	20	20.42	88	36324	335	0.0444	100	210	252	364	74	156	187	271	68	143	172	249	
	22.4	23.04	78	36324	297	0.0326	107	210	252	364	79	156	187	271	73	144	172	249	
	25	25.70	70	35672	262	0.0302	102	205	252	364	76	152	187	271	69	140	172	249	
	28	29.21	62	35672	230	0.0259	102	205	252	364	76	152	187	271	70	140	172	249	
	31.5	32.79	55	35672	205	0.0244	99	205	252	364	74	152	187	271	68	140	172	249	
	35.5	35.69	50	35672	188	0.0178	99	205	252	364	74	152	187	271	68	140	172	249	
	40	40.57	44	35672	166	0.0156	99	205	252	364	74	152	187	271	68	140	172	249	
	45	45.54	40	35672	148	0.0148	99	205	252	364	74	152	187	271	68	140	172	249	
	50	51.20	35	35672	131	0.0095	99	205	252	364	74	152	187	271	68	140	172	249	
	56	57.11	32	35027	116	0.0090	99	205	252	364	74	152	187	271	68	140	172	249	
	63	64.91	28	35027	102	0.0081	99	205	252	364	74	152	187	271	68	140	172	249	
	71	72.86	25	35027	91	0.0078	99	205	252	364	74	152	187	271	68	140	172	249	
	80	79.95	23	35027	83	0.0050	99	205	252	364	74	152	187	271	68	140	172	249	
	90	90.88	20	35027	73	0.0046	99	205	252	364	74	152	187	271	68	140	172	249	
	100	102.01	18	35027	65	0.0044	99	205	252	364	74	152	187	271	68	140	172	249	
	71	72.62	25	35027	91	0.0087	75	154	189	273	55	114	141	203	51	105	129	187	E4H (x4)
	80	80.99	22	35027	82	0.0084	75	154	189	273	55	114	141	203	51	105	129	187	
	90	92.07	20	35027	72	0.0080	75	154	189	273	55	114	141	203	51	105	129	187	
	100	102.78	18	35027	64	0.0050	75	154	189	273	55	114	141	203	51	105	129	187	
	112	114.64	16	35027	58	0.0049	75	154	189	273	55	114	141	203	51	105	129	187	
	125	130.31	14	35027	51	0.0047	75	154	189	273	55	114	141	203	51	105	129	187	
	140	146.26	12	35027	45	0.0046	75	154	189	273	55	114	141	203	51	105	129	187	
	160	160.45	11	35027	41	0.0032	75	154	189	273	55	114	141	203	51	105	129	187	
	180	182.38	10	35027	36	0.0031	75	154	189	273	55	114	141	203	51	105	129	187	
	200	204.71	9	35027	32	0.0031	75	154	189	273	55	114	141	203	51	105	129	187	
	224	236.52	8	34387	27	0.0015	75	154	189	273	55	114	141	203	51	105	129	187	
	250	263.81	7	34387	25	0.0014	75	154	189	273	55	114	141	203	51	105	129	187	
	280	299.87	6	34387	22	0.0014	75	154	189	273	55	114	141	203	51	105	129	187	
	315	336.58	5	34387	19	0.0014	75	154	189	273	55	114	141	203	51	105	129	187	
	355	361.00	5	34387	18	0.0010	75	154	189	273	55	114	141	203	51	105	129	187	
	400	410.35	4	34387	16	0.0009	75	154	189	273	55	114	141	203	51	105	129	187	
	450	460.59	4	31277	13	0.0009	75	154	189	273	55	114	141	203	51	105	129	187	

E2H / E3H / E4H ...28 — MONOBLOCK HOUSING — 50 Hz — 39 kNm

	i_N	i_{eff}	n_2 [rpm]	T_{2N} [Nm]	P_N [kW]	J [Kgm²]	R1 P_{t0} [kW]	R1	R1 H_2O	R1 $+H_2O$	S5 P_{t0} [kW]	S5	S5 H_2O	S5 $+H_2O$	T6 P_{t0} [kW]	T6	T6 H_2O	T6 $+H_2O$	Type
n_1 = 1000 rpm	4	4.03	248	30242	786	0.3224	162	224	349	449	120	167	259	334	110	153	238	307	E2H (x2)
	4.5	4.52	221	31011	718	0.2648	162	224	349	466	120	167	259	346	110	153	238	318	
	5	5.10	196	32292	663	0.2225	162	240	349	473	120	178	259	351	110	164	238	323	
	5.6	5.76	174	33573	610	0.1863	162	240	349	469	120	179	259	349	110	164	238	320	
	6.3	6.40	156	31011	507	0.1599	162	258	359	470	120	192	267	349	110	176	245	321	
	7.1	7.31	137	32292	463	0.1320	162	259	364	455	120	193	270	338	110	177	249	311	
	8	8.00	125	36905	483	0.1207	162	251	358	436	120	187	266	324	110	171	244	298	
	9	9.07	110	38400	443	0.0989	167	254	354	425	124	189	263	316	114	173	242	291	
	10	9.98	100	38700	406	0.0897	163	239	349	398	121	177	259	296	111	163	238	272	
	11.2	11.52	87	38826	353	0.0724	162	230	349	383	120	171	259	284	110	157	238	261	
	12.5	12.80	78	38826	318	0.0642	162	224	349	382	120	167	259	284	110	153	238	261	
	14	14.28	70	38076	279	0.0565	162	224	349	382	120	167	259	284	110	153	238	261	
	16	16.23	62	37333	241	0.0433	162	224	349	382	120	167	259	284	110	153	238	261	
	18	18.22	55	38076	219	0.0387	162	224	349	382	120	167	259	284	110	153	238	261	
	16	16.10	62	36649	238	0.0570	108	160	273	300	80	119	203	223	74	109	186	205	E3H (x3)
	18	17.96	56	38076	222	0.0522	108	154	273	300	80	114	203	223	73	105	186	205	
	20	20.42	49	37333	191	0.0437	108	153	273	300	81	113	203	223	74	104	186	205	
	22.4	23.04	43	38076	173	0.0320	115	153	273	300	86	114	203	223	79	105	186	205	
	25	25.70	39	38076	155	0.0297	110	149	273	300	82	111	203	223	75	102	186	205	
	28	29.21	34	36598	131	0.0255	110	149	273	300	82	111	203	223	75	102	186	205	
	31.5	32.79	30	37333	119	0.0241	107	149	273	300	80	111	203	223	73	102	186	205	
	35.5	35.69	28	37333	110	0.0175	107	149	273	300	80	111	203	223	73	102	186	205	
	40	40.57	25	36598	94	0.0154	107	149	273	300	80	111	203	223	73	102	186	205	
	45	45.54	22	37333	86	0.0147	107	149	273	300	80	111	203	223	73	102	186	205	
	50	51.20	20	37333	76	0.0093	107	149	273	300	80	111	203	223	73	102	186	205	
	56	57.11	18	37333	68	0.0089	107	149	273	300	80	111	203	223	73	102	186	205	
	63	64.91	15	35869	58	0.0080	107	149	273	300	80	111	203	223	73	102	186	205	
	71	72.86	14	37333	54	0.0077	107	149	273	300	80	111	203	223	73	102	186	205	
	80	79.95	13	37333	49	0.0050	107	149	273	300	80	111	203	223	73	102	186	205	
	90	90.88	11	35869	41	0.0046	107	149	273	300	80	111	203	223	73	102	186	205	
	100	102.01	10	36598	38	0.0044	107	149	273	300	80	111	203	223	73	102	186	205	
	71	72.62	14	37333	54	0.0086	81	112	205	225	60	83	152	167	55	76	140	154	E4H (x4)
	80	80.99	12	37333	48	0.0084	81	112	205	225	60	83	152	167	55	76	140	154	
	90	92.07	11	35869	41	0.0079	81	112	205	225	60	83	152	167	55	76	140	154	
	100	102.78	10	36598	37	0.0050	81	112	205	225	60	83	152	167	55	76	140	154	
	112	114.64	9	36598	33	0.0049	81	112	205	225	60	83	152	167	55	76	140	154	
	125	130.31	8	35148	28	0.0047	81	112	205	225	60	83	152	167	55	76	140	154	
	140	146.26	7	36598	26	0.0046	81	112	205	225	60	83	152	167	55	76	140	154	
	160	160.45	6	36598	24	0.0032	81	112	205	225	60	83	152	167	55	76	140	154	
	180	182.38	5	35148	20	0.0031	81	112	205	225	60	83	152	167	55	76	140	154	
	200	204.71	5	36598	19	0.0030	81	112	205	225	60	83	152	167	55	76	140	154	
	224	236.52	4	36598	16	0.0015	81	112	205	225	60	83	152	167	55	76	140	154	
	250	263.81	4	36598	15	0.0014	81	112	205	225	60	83	152	167	55	76	140	154	
	280	299.87	3	35148	12	0.0014	81	112	205	225	60	83	152	167	55	76	140	154	
	315	336.58	3	36598	11	0.0014	81	112	205	225	60	83	152	167	55	76	140	154	
	355	361.00	3	36598	11	0.0010	81	112	205	225	60	83	152	167	55	76	140	154	
	400	410.35	2	34435	9	0.0009	81	112	205	225	60	83	152	167	55	76	140	154	
	450	460.59	2	36598	8	0.0009	81	112	205	225	60	83	152	167	55	76	140	154	

E2H / E3H / E4H ...28 — MONOBLOCK HOUSING — 50 Hz — 39 kNm

n_1 = 1500 rpm

i_N	i_{eff}	n_2 [rpm]	T_{2N} [Nm]	P_N [kW]	J [Kgm²]	R1 P_{t0} [kW]	R1	R1 H_2O	R1 $+H_2O$	S5 P_{t0} [kW]	S5	S5 H_2O	S5 $+H_2O$	T6 P_{t0} [kW]	T6	T6 H_2O	T6 $+H_2O$	Type
4	4.03	372	30242	1179	0.3224	154	299	332	535	114	222	247	397	105	204	227	365	E2H (x2)
4.5	4.52	332	31011	1078	0.2648	154	299	332	555	114	222	247	412	105	204	227	379	
5	5.10	294	32292	995	0.2225	154	320	332	563	114	238	247	418	105	219	227	384	
5.6	5.76	260	33573	916	0.1863	154	320	332	559	114	238	247	415	105	219	227	382	
6.3	6.40	234	31011	761	0.1599	154	344	342	560	114	255	254	416	105	235	234	382	
7.1	7.31	205	32292	694	0.1320	154	346	347	541	114	257	258	402	105	236	237	370	
8	8.00	188	36905	725	0.1207	154	335	341	520	114	249	253	386	105	229	233	355	
9	9.07	165	38400	665	0.0989	159	338	338	506	119	251	251	376	109	231	231	346	
10	9.98	150	38700	609	0.0897	155	318	332	474	115	236	247	352	106	217	227	324	
11.2	11.52	130	38826	529	0.0724	154	306	332	456	114	227	247	339	105	209	227	311	
12.5	12.80	117	38826	476	0.0642	154	299	332	455	114	222	247	338	105	204	227	311	
14	14.28	105	38076	419	0.0565	154	299	332	455	114	222	247	338	105	204	227	311	
16	16.23	92	37333	361	0.0433	154	299	332	455	114	222	247	338	105	204	227	311	
18	18.22	82	38076	328	0.0387	154	299	332	455	114	222	247	338	105	204	227	311	
16	16.10	93	36649	358	0.0570	103	214	260	357	76	159	193	265	70	146	178	244	E3H (x3)
18	17.96	84	38076	333	0.0522	102	205	260	357	76	153	193	265	70	140	178	244	
20	20.42	73	37333	287	0.0437	103	204	260	357	77	151	193	265	70	139	178	244	
22.4	23.04	65	38076	260	0.0320	110	204	260	357	82	152	193	265	75	140	178	244	
25	25.70	58	38076	233	0.0297	105	199	260	357	78	148	193	265	72	136	178	244	
28	29.21	51	36598	197	0.0255	105	199	260	357	78	148	193	265	72	136	178	244	
31.5	32.79	46	37333	179	0.0241	102	199	260	357	76	148	193	265	70	136	178	244	
35.5	35.69	42	37333	164	0.0175	102	199	260	357	76	148	193	265	70	136	178	244	
40	40.57	37	36598	142	0.0154	102	199	260	357	76	148	193	265	70	136	178	244	
45	45.54	33	37333	129	0.0147	102	199	260	357	76	148	193	265	70	136	178	244	
50	51.20	29	37333	115	0.0093	102	199	260	357	76	148	193	265	70	136	178	244	
56	57.11	26	37333	103	0.0089	102	199	260	357	76	148	193	265	70	136	178	244	
63	64.91	23	35869	87	0.0080	102	199	260	357	76	148	193	265	70	136	178	244	
71	72.86	21	37333	80	0.0077	102	199	260	357	76	148	193	265	70	136	178	244	
80	79.95	19	37333	73	0.0050	102	199	260	357	76	148	193	265	70	136	178	244	
90	90.88	17	35869	62	0.0046	102	199	260	357	76	148	193	265	70	136	178	244	
100	102.01	15	36598	56	0.0044	102	199	260	357	76	148	193	265	70	136	178	244	
71	72.62	21	37333	81	0.0086	77	149	195	268	57	111	145	199	53	102	133	183	E4H (x4)
80	80.99	19	37333	72	0.0084	77	149	195	268	57	111	145	199	53	102	133	183	
90	92.07	16	35869	61	0.0079	77	149	195	268	57	111	145	199	53	102	133	183	
100	102.78	15	36598	56	0.0050	77	149	195	268	57	111	145	199	53	102	133	183	
112	114.64	13	36598	50	0.0049	77	149	195	268	57	111	145	199	53	102	133	183	
125	130.31	12	35148	42	0.0047	77	149	195	268	57	111	145	199	53	102	133	183	
140	146.26	10	36598	39	0.0046	77	149	195	268	57	111	145	199	53	102	133	183	
160	160.45	9	36598	36	0.0032	77	149	195	268	57	111	145	199	53	102	133	183	
180	182.38	8	35148	30	0.0031	77	149	195	268	57	111	145	199	53	102	133	183	
200	204.71	7	36598	28	0.0030	77	149	195	268	57	111	145	199	53	102	133	183	
224	236.52	6	36598	24	0.0015	77	149	195	268	57	111	145	199	53	102	133	183	
250	263.81	6	36598	22	0.0014	77	149	195	268	57	111	145	199	53	102	133	183	
280	299.87	5	35148	18	0.0014	77	149	195	268	57	111	145	199	53	102	133	183	
315	336.58	4	36598	17	0.0014	77	149	195	268	57	111	145	199	53	102	133	183	
355	361.00	4	36598	16	0.0010	77	149	195	268	57	111	145	199	53	102	133	183	
400	410.35	4	34435	13	0.0009	77	149	195	268	57	111	145	199	53	102	133	183	
450	460.59	3	36598	12	0.0009	77	149	195	268	57	111	145	199	53	102	133	183	

E2H / E3H / E4H ...28 — MONOBLOCK HOUSING — 60 Hz — 39 kNm

	i_N	i_{eff}	n_2 [rpm]	T_{2N} [Nm]	P_N [kW]	J [Kgm²]	R1 P_{t0} [kW]	R1	R1 H_2O	R1 $+H_2O$	S5 P_{t0} [kW]	S5	S5 H_2O	S5 $+H_2O$	T6 P_{t0} [kW]	T6	T6 H_2O	T6 $+H_2O$	Type
n_1 = 1200 rpm	**4**	4.03	298	30242	943	0.3224	159	257	342	481	118	191	254	358	108	176	234	329	E2H (x2)
	4.5	4.52	265	31011	862	0.2648	159	257	342	499	118	191	254	371	108	176	234	341	
	5	5.10	235	32292	796	0.2225	159	275	342	507	118	205	254	376	108	188	234	346	
	5.6	5.76	208	33573	732	0.1863	159	276	342	503	118	205	254	374	108	188	234	343	
	6.3	6.40	188	31011	609	0.1599	159	296	352	504	118	220	262	374	108	202	241	344	
	7.1	7.31	164	32292	555	0.1320	159	297	357	487	118	221	265	362	108	203	244	333	
	8	8.00	150	36905	580	0.1207	159	288	351	468	118	214	261	347	108	197	240	319	
	9	9.07	132	38400	532	0.0989	164	291	348	456	122	216	258	339	112	199	237	311	
	10	9.98	120	38700	487	0.0897	160	274	342	427	119	203	254	317	109	187	234	291	
	11.2	11.52	104	38826	424	0.0724	159	263	342	410	118	196	254	305	108	180	234	280	
	12.5	12.80	94	38826	381	0.0642	159	257	342	410	118	191	254	304	108	176	234	280	
	14	14.28	84	38076	335	0.0565	159	257	342	410	118	191	254	304	108	176	234	280	
	16	16.23	74	37333	289	0.0433	159	257	342	410	118	191	254	304	108	176	234	280	
	18	18.22	66	38076	263	0.0387	159	257	342	410	118	191	254	304	108	176	234	280	
	16	16.10	75	36649	286	0.0570	106	184	268	321	79	136	199	239	72	125	183	219	E3H (x3)
	18	17.96	67	38076	266	0.0522	106	177	268	321	78	131	199	239	72	121	183	219	
	20	20.42	59	37333	230	0.0437	106	175	268	321	79	130	199	239	73	120	183	219	
	22.4	23.04	52	38076	208	0.0320	113	176	268	321	84	131	199	239	77	120	183	219	
	25	25.70	47	38076	186	0.0297	108	171	268	321	80	127	199	239	74	117	183	219	
	28	29.21	41	36598	157	0.0255	108	171	268	321	80	127	199	239	74	117	183	219	
	31.5	32.79	37	37333	143	0.0241	105	171	268	321	78	127	199	239	72	117	183	219	
	35.5	35.69	34	37333	131	0.0175	105	171	268	321	78	127	199	239	72	117	183	219	
	40	40.57	30	36598	113	0.0154	105	171	268	321	78	127	199	239	72	117	183	219	
	45	45.54	26	37333	103	0.0147	105	171	268	321	78	127	199	239	72	117	183	219	
	50	51.20	23	37333	92	0.0093	105	171	268	321	78	127	199	239	72	117	183	219	
	56	57.11	21	37333	82	0.0089	105	171	268	321	78	127	199	239	72	117	183	219	
	63	64.91	18	35869	69	0.0080	105	171	268	321	78	127	199	239	72	117	183	219	
	71	72.86	16	37333	64	0.0077	105	171	268	321	78	127	199	239	72	117	183	219	
	80	79.95	15	37333	59	0.0050	105	171	268	321	78	127	199	239	72	117	183	219	
	90	90.88	13	35869	50	0.0046	105	171	268	321	78	127	199	239	72	117	183	219	
	100	102.01	12	36598	45	0.0044	105	171	268	321	78	127	199	239	72	117	183	219	
	71	72.62	17	37333	65	0.0086	79	128	201	241	59	95	149	179	54	88	137	165	E4H (x4)
	80	80.99	15	37333	58	0.0084	79	128	201	241	59	95	149	179	54	88	137	165	
	90	92.07	13	35869	49	0.0079	79	128	201	241	59	95	149	179	54	88	137	165	
	100	102.78	12	36598	45	0.0050	79	128	201	241	59	95	149	179	54	88	137	165	
	112	114.64	10	36598	40	0.0049	79	128	201	241	59	95	149	179	54	88	137	165	
	125	130.31	9	35148	34	0.0047	79	128	201	241	59	95	149	179	54	88	137	165	
	140	146.26	8	36598	31	0.0046	79	128	201	241	59	95	149	179	54	88	137	165	
	160	160.45	7	36598	29	0.0032	79	128	201	241	59	95	149	179	54	88	137	165	
	180	182.38	7	35148	24	0.0031	79	128	201	241	59	95	149	179	54	88	137	165	
	200	204.71	6	36598	22	0.0030	79	128	201	241	59	95	149	179	54	88	137	165	
	224	236.52	5	36598	19	0.0015	79	128	201	241	59	95	149	179	54	88	137	165	
	250	263.81	5	36598	17	0.0014	79	128	201	241	59	95	149	179	54	88	137	165	
	280	299.87	4	35148	15	0.0014	79	128	201	241	59	95	149	179	54	88	137	165	
	315	336.58	4	36598	14	0.0014	79	128	201	241	59	95	149	179	54	88	137	165	
	355	361.00	3	36598	13	0.0010	79	128	201	241	59	95	149	179	54	88	137	165	
	400	410.35	3	34435	11	0.0009	79	128	201	241	59	95	149	179	54	88	137	165	
	450	460.59	3	36598	10	0.0009	79	128	201	241	59	95	149	179	54	88	137	165	

E2H / E3H / E4H ...28 — MONOBLOCK HOUSING — 60 Hz — 39 kNm

n_1 = 1800 rpm

i_N	i_{eff}	n_2 [rpm]	T_{2N} [Nm]	P_N [kW]	J [Kgm²]	R1 P_{t0} [kW]	R1	R1 H_2O	R1 $+H_2O$	S5 P_{t0} [kW]	S5	S5 H_2O	S5 $+H_2O$	T6 P_{t0} [kW]	T6	T6 H_2O	T6 $+H_2O$	Type
4	4.03	447	30242	1415	0.3224	149	308	322	545	111	229	239	405	102	210	220	372	E2H (x2)
4.5	4.52	398	31011	1293	0.2648	149	308	322	566	111	229	239	421	102	210	220	387	
5	5.10	353	32292	1194	0.2225	149	330	322	574	111	245	239	427	102	225	220	392	
5.6	5.76	313	33573	1099	0.1863	149	330	322	570	111	245	239	423	102	225	220	389	
6.3	6.40	281	31011	913	0.1599	149	354	332	571	111	263	246	424	102	242	227	390	
7.1	7.31	246	32292	833	0.1320	149	356	336	552	111	265	250	410	102	243	230	377	
8	8.00	225	36905	870	0.1207	149	345	330	530	111	256	246	394	102	236	226	362	
9	9.07	198	38400	798	0.0989	155	349	327	516	115	259	243	384	106	238	224	353	
10	9.98	180	38700	731	0.0897	151	328	322	484	112	244	239	359	103	224	220	330	
11.2	11.52	156	38826	635	0.0724	149	315	322	465	111	234	239	345	102	215	220	317	
12.5	12.80	141	38826	572	0.0642	149	308	322	464	111	229	239	345	102	210	220	317	
14	14.28	126	38076	503	0.0565	149	308	322	464	111	229	239	345	102	210	220	317	
16	16.23	111	37333	434	0.0433	149	308	322	464	111	229	239	345	102	210	220	317	
18	18.22	99	38076	394	0.0387	149	308	322	464	111	229	239	345	102	210	220	317	
16	16.10	112	36649	429	0.0570	100	220	252	364	74	163	187	271	68	150	172	249	E3H (x3)
18	17.96	100	38076	400	0.0522	99	211	252	364	74	157	187	271	68	144	172	249	
20	20.42	88	37333	345	0.0437	100	210	252	364	74	156	187	271	68	143	172	249	
22.4	23.04	78	38076	312	0.0320	107	210	252	364	79	156	187	271	73	144	172	249	
25	25.70	70	38076	279	0.0297	102	205	252	364	76	152	187	271	69	140	172	249	
28	29.21	62	36598	236	0.0255	102	205	252	364	76	152	187	271	70	140	172	249	
31.5	32.79	55	37333	215	0.0241	99	205	252	364	74	152	187	271	68	140	172	249	
35.5	35.69	50	37333	197	0.0175	99	205	252	364	74	152	187	271	68	140	172	249	
40	40.57	44	36598	170	0.0154	99	205	252	364	74	152	187	271	68	140	172	249	
45	45.54	40	37333	155	0.0147	99	205	252	364	74	152	187	271	68	140	172	249	
50	51.20	35	37333	137	0.0093	99	205	252	364	74	152	187	271	68	140	172	249	
56	57.11	32	37333	123	0.0089	99	205	252	364	74	152	187	271	68	140	172	249	
63	64.91	28	35869	104	0.0080	99	205	252	364	74	152	187	271	68	140	172	249	
71	72.86	25	37333	97	0.0077	99	205	252	364	74	152	187	271	68	140	172	249	
80	79.95	23	37333	88	0.0050	99	205	252	364	74	152	187	271	68	140	172	249	
90	90.88	20	35869	74	0.0046	99	205	252	364	74	152	187	271	68	140	172	249	
100	102.01	18	36598	68	0.0044	99	205	252	364	74	152	187	271	68	140	172	249	
71	72.62	25	37333	97	0.0086	75	154	189	273	55	114	141	203	51	105	129	187	E4H (x4)
80	80.99	22	37333	87	0.0084	75	154	189	273	55	114	141	203	51	105	129	187	
90	92.07	20	35869	73	0.0079	75	154	189	273	55	114	141	203	51	105	129	187	
100	102.78	18	36598	67	0.0050	75	154	189	273	55	114	141	203	51	105	129	187	
112	114.64	16	36598	60	0.0049	75	154	189	273	55	114	141	203	51	105	129	187	
125	130.31	14	35148	51	0.0047	75	154	189	273	55	114	141	203	51	105	129	187	
140	146.26	12	36598	47	0.0046	75	154	189	273	55	114	141	203	51	105	129	187	
160	160.45	11	36598	43	0.0032	75	154	189	273	55	114	141	203	51	105	129	187	
180	182.38	10	35148	36	0.0031	75	154	189	273	55	114	141	203	51	105	129	187	
200	204.71	9	36598	34	0.0030	75	154	189	273	55	114	141	203	51	105	129	187	
224	236.52	8	36598	29	0.0015	75	154	189	273	55	114	141	203	51	105	129	187	
250	263.81	7	36598	26	0.0014	75	154	189	273	55	114	141	203	51	105	129	187	
280	299.87	6	35148	22	0.0014	75	154	189	273	55	114	141	203	51	105	129	187	
315	336.58	5	36598	20	0.0014	75	154	189	273	55	114	141	203	51	105	129	187	
355	361.00	5	36598	19	0.0010	75	154	189	273	55	114	141	203	51	105	129	187	
400	410.35	4	34435	16	0.0009	75	154	189	273	55	114	141	203	51	105	129	187	
450	460.59	4	36598	15	0.0009	75	154	189	273	55	114	141	203	51	105	129	187	

E2H / E3H / E4H ...31 — MONOBLOCK HOUSING — 50 Hz — 50 kNm

	i_N	i_{eff}	n_2 [rpm]	T_{2N} [Nm]	P_N [kW]	J [Kgm²]	R1 P_{t0} [kW]	R1	R1 H_2O	R1 +H_2O	S5 P_{t0} [kW]	S5	S5 H_2O	S5 +H_2O	T6 P_{t0} [kW]	T6	T6 H_2O	T6 +H_2O	Type
n_1 = 1000 rpm	**5.6**	5.45	183	40821	784	0.4274	193	269	571	681	144	200	424	506	132	184	390	465	E2H (x2)
	6.3	6.13	163	41824	714	0.3479	193	280	592	689	144	208	440	512	132	191	404	471	
	7.1	6.90	145	43832	665	0.2880	193	303	599	680	144	225	445	505	132	207	409	465	
	8	7.80	128	45505	611	0.2376	193	312	594	667	144	232	441	495	132	213	406	455	
	9	8.67	115	42159	509	0.2014	193	322	595	663	144	239	442	493	132	220	406	453	
	10	9.90	101	43832	464	0.1638	199	314	578	638	148	233	429	474	136	214	394	436	
	11.2	10.83	92	49185	476	0.1473	201	305	554	612	149	227	412	455	137	208	379	418	
	12.5	12.28	81	49185	419	0.1196	196	295	537	592	146	219	399	440	134	202	367	404	
	14	13.51	74	49520	384	0.1068	193	277	527	554	144	206	392	412	132	189	360	378	
	16	15.60	64	49520	332	0.0852	193	269	527	539	144	200	392	401	132	184	360	368	
	18	17.33	58	49520	299	0.0746	193	269	527	539	144	200	392	401	132	184	360	368	
	20	19.33	52	49520	268	0.0649	193	269	527	539	144	200	392	401	132	184	360	368	
	22.4	21.98	45	49520	236	0.0498	193	269	527	539	144	200	392	401	132	184	360	368	
	25	24.67	41	49520	210	0.0438	193	269	527	539	144	200	392	401	132	184	360	368	
	22.4	21.81	46	49520	238	0.0635	130	188	440	449	97	140	327	334	89	128	300	307	E3H (x3)
	25	24.32	41	49520	213	0.0574	129	180	440	449	96	134	327	334	88	123	300	307	
	28	27.65	36	49520	188	0.0477	129	180	440	449	96	134	327	334	88	123	300	307	
	31.5	31.20	32	49520	166	0.0352	136	179	440	449	101	133	327	334	93	122	300	307	
	35.5	34.80	29	49520	149	0.0323	133	179	440	449	99	133	327	334	91	122	300	307	
	40	39.56	25	49520	131	0.0275	129	179	440	449	96	133	327	334	88	122	300	307	
	45	44.40	23	49520	117	0.0257	129	179	440	449	96	133	327	334	88	122	300	307	
	50	48.33	21	49520	107	0.0189	129	179	440	449	96	133	327	334	88	122	300	307	
	56	54.94	18	48741	93	0.0164	129	179	440	449	96	133	327	334	88	122	300	307	
	63	61.67	16	49520	84	0.0155	129	179	440	449	96	133	327	334	88	122	300	307	
	71	69.33	14	49855	75	0.0100	129	179	440	449	96	133	327	334	88	122	300	307	
	80	77.33	13	49855	68	0.0094	129	179	440	449	96	133	327	334	88	122	300	307	
	90	87.90	11	48741	58	0.0084	129	179	440	449	96	133	327	334	88	122	300	307	
	100	98.67	10	49855	53	0.0081	144	193	440	449	107	144	327	334	98	132	300	307	
	112	108.27	9	49855	48	0.0052	129	179	440	449	96	133	327	334	88	122	300	307	
	125	123.07	8	47780	41	0.0048	129	179	440	449	96	133	327	334	88	122	300	307	
	140	138.13	7	49855	38	0.0046	139	187	440	449	104	139	327	334	95	128	300	307	
	100	98.33	10	49855	53	0.0089	97	134	330	337	72	100	245	250	66	92	225	230	E4H (x4)
	112	109.68	9	49855	48	0.0086	97	134	330	337	72	100	245	250	66	92	225	230	
	125	124.67	8	47780	40	0.0081	97	134	330	337	72	100	245	250	66	92	225	230	
	140	139.18	7	49855	38	0.0052	97	134	330	337	72	100	245	250	66	92	225	230	
	160	155.24	6	49855	34	0.0050	97	134	330	337	72	100	245	250	66	92	225	230	
	180	176.46	6	47780	28	0.0048	97	134	330	337	72	100	245	250	66	92	225	230	
	200	198.06	5	49855	26	0.0047	97	134	330	337	72	100	245	250	66	92	225	230	
	224	217.27	5	49855	24	0.0033	97	134	330	337	72	100	245	250	66	92	225	230	
	250	246.97	4	47780	20	0.0031	97	134	330	337	72	100	245	250	66	92	225	230	
	280	277.21	4	49855	19	0.0031	97	134	330	337	72	100	245	250	66	92	225	230	
	315	320.29	3	49855	16	0.0015	97	134	330	337	72	100	245	250	66	92	225	230	
	355	357.24	3	49855	15	0.0015	97	134	330	337	72	100	245	250	66	92	225	230	
	400	406.08	2	46829	12	0.0014	97	134	330	337	72	100	245	250	66	92	225	230	
	450	455.79	2	49711	11	0.0014	97	134	330	337	72	100	245	250	66	92	225	230	
	500	488.86	2	49711	11	0.0010	97	134	330	337	72	100	245	250	66	92	225	230	
	560	555.68	2	46829	9	0.0009	97	134	330	337	72	100	245	250	66	92	225	230	
	630	623.71	2	49711	8	0.0009	97	134	330	337	72	100	245	250	66	92	225	230	

E2H / E3H / E4H ...31 — MONOBLOCK HOUSING — 50 Hz — 50 kNm

n_1 = 1500 rpm

i_N	i_{eff}	n_2 [rpm]	T_{2N} [Nm]	P_N [kW]	J [Kgm²]	R1 P_{t0} [kW]	R1	R1 H_2O	R1 $+H_2O$	S5 P_{t0} [kW]	S5	S5 H_2O	S5 $+H_2O$	T6 P_{t0} [kW]	T6	T6 H_2O	T6 $+H_2O$	Type
5.6	5.45	275	40821	1177	0.4274	184	359	544	811	137	267	404	603	126	245	371	554	E2H (x2)
6.3	6.13	245	41824	1072	0.3479	184	374	564	821	137	278	419	610	126	255	385	561	
7.1	6.90	217	43832	998	0.2880	184	404	570	810	137	300	424	602	126	276	390	553	
8	7.80	192	45505	916	0.2376	184	416	566	794	137	309	420	590	126	284	386	542	
9	8.67	173	42159	764	0.2014	184	429	566	789	137	319	421	587	126	293	387	539	
10	9.90	152	43832	695	0.1638	190	418	550	760	141	311	409	564	130	286	376	519	
11.2	10.83	139	49185	713	0.1473	191	407	528	728	142	302	392	541	130	278	361	497	
12.5	12.28	122	49185	629	0.1196	187	394	511	705	139	293	380	524	128	269	349	481	
14	13.51	111	49520	576	0.1068	184	369	502	660	137	274	373	490	126	252	343	451	
16	15.60	96	49520	499	0.0852	184	359	502	642	137	267	373	477	126	245	343	438	
18	17.33	87	49520	449	0.0746	184	359	502	642	137	267	373	477	126	245	343	438	
20	19.33	78	49520	402	0.0649	184	359	502	642	137	267	373	477	126	245	343	438	
22.4	21.98	68	49520	354	0.0498	184	359	502	642	137	267	373	477	126	245	343	438	
25	24.67	61	49520	315	0.0438	184	359	502	642	137	267	373	477	126	245	343	438	
22.4	21.81	69	49520	357	0.0635	124	250	419	535	92	186	311	398	85	171	286	365	E3H (x3)
25	24.32	62	49520	320	0.0574	123	240	419	535	91	178	311	398	84	164	286	365	
28	27.65	54	49520	281	0.0477	123	240	419	535	91	178	311	398	84	164	286	365	
31.5	31.20	48	49520	249	0.0352	130	239	419	535	97	178	311	398	89	163	286	365	
35.5	34.80	43	49520	224	0.0323	127	239	419	535	94	178	311	398	87	163	286	365	
40	39.56	38	49520	197	0.0275	123	239	419	535	91	178	311	398	84	163	286	365	
45	44.40	34	49520	175	0.0257	123	239	419	535	91	178	311	398	84	163	286	365	
50	48.33	31	49520	161	0.0189	123	239	419	535	91	178	311	398	84	163	286	365	
56	54.94	27	48741	139	0.0164	123	239	419	535	91	178	311	398	84	163	286	365	
63	61.67	24	49520	126	0.0155	123	239	419	535	91	178	311	398	84	163	286	365	
71	69.33	22	49855	113	0.0100	123	239	419	535	91	178	311	398	84	163	286	365	
80	77.33	19	49855	101	0.0094	123	239	419	535	91	178	311	398	84	163	286	365	
90	87.90	17	48741	87	0.0084	123	239	419	535	91	178	311	398	84	163	286	365	
100	98.67	15	49855	79	0.0081	137	258	419	535	102	192	311	398	94	176	286	365	
112	108.27	14	49855	72	0.0052	123	239	419	535	91	178	311	398	84	163	286	365	
125	123.07	12	47780	61	0.0048	123	239	419	535	91	178	311	398	84	163	286	365	
140	138.13	11	49855	57	0.0046	133	250	419	535	99	186	311	398	91	171	286	365	
100	98.33	15	49855	80	0.0089	92	179	314	401	68	133	233	298	63	122	214	274	E4H (x4)
112	109.68	14	49855	71	0.0086	92	179	314	401	68	133	233	298	63	122	214	274	
125	124.67	12	47780	60	0.0081	92	179	314	401	68	133	233	298	63	122	214	274	
140	139.18	11	49855	56	0.0052	92	179	314	401	68	133	233	298	63	122	214	274	
160	155.24	10	49855	50	0.0050	92	179	314	401	68	133	233	298	63	122	214	274	
180	176.46	9	47780	43	0.0048	92	179	314	401	68	133	233	298	63	122	214	274	
200	198.06	8	49855	40	0.0047	92	179	314	401	68	133	233	298	63	122	214	274	
224	217.27	7	49855	36	0.0033	92	179	314	401	68	133	233	298	63	122	214	274	
250	246.97	6	47780	30	0.0031	92	179	314	401	68	133	233	298	63	122	214	274	
280	277.21	5	49855	28	0.0031	92	179	314	401	68	133	233	298	63	122	214	274	
315	320.29	5	49855	24	0.0015	92	179	314	401	68	133	233	298	63	122	214	274	
355	357.24	4	49855	22	0.0015	92	179	314	401	68	133	233	298	63	122	214	274	
400	406.08	4	46829	18	0.0014	92	179	314	401	68	133	233	298	63	122	214	274	
450	455.79	3	49711	17	0.0014	92	179	314	401	68	133	233	298	63	122	214	274	
500	488.86	3	49711	16	0.0010	92	179	314	401	68	133	233	298	63	122	214	274	
560	555.68	3	46829	13	0.0009	92	179	314	401	68	133	233	298	63	122	214	274	
630	623.71	2	49711	13	0.0009	92	179	314	401	68	133	233	298	63	122	214	274	

E2H / E3H / E4H ...31 — MONOBLOCK HOUSING — 60 Hz — 50 kNm

	i_N	i_{eff}	n_2 [rpm]	T_{2N} [Nm]	P_N [kW]	J [Kgm²]	R1 P_{t0} [kW]	R1	R1 H_2O	R1 +H_2O	S5 P_{t0} [kW]	S5	S5 H_2O	S5 +H_2O	T6 P_{t0} [kW]	T6	T6 H_2O	T6 +H_2O	Type
n_1 = 1200 rpm	**5.6**	5.45	220	40821	941	0.4274	190	309	560	730	141	229	416	542	129	211	383	499	E2H (x2)
	6.3	6.13	196	41824	857	0.3479	190	321	581	739	141	239	431	549	129	220	397	505	
	7.1	6.90	174	43832	798	0.2880	190	348	588	729	141	258	437	542	129	237	401	498	
	8	7.80	154	45505	733	0.2376	190	358	583	714	141	266	433	531	129	245	398	488	
	9	8.67	138	42159	611	0.2014	190	369	583	711	141	274	433	528	129	252	398	485	
	10	9.90	121	43832	556	0.1638	196	360	567	684	145	267	421	508	134	246	387	467	
	11.2	10.83	111	49185	571	0.1473	197	350	544	656	146	260	404	487	134	239	371	448	
	12.5	12.28	98	49185	503	0.1196	192	339	527	634	143	252	391	471	131	231	360	433	
	14	13.51	89	49520	461	0.1068	190	318	517	594	141	236	384	441	129	217	353	405	
	16	15.60	77	49520	399	0.0852	190	309	517	578	141	229	384	429	129	211	353	395	
	18	17.33	69	49520	359	0.0746	190	309	517	578	141	229	384	429	129	211	353	395	
	20	19.33	62	49520	322	0.0649	190	309	517	578	141	229	384	429	129	211	353	395	
	22.4	21.98	55	49520	283	0.0498	190	309	517	578	141	229	384	429	129	211	353	395	
	25	24.67	49	49520	252	0.0438	190	309	517	578	141	229	384	429	129	211	353	395	
	22.4	21.81	55	49520	285	0.0635	128	215	432	482	95	160	321	358	87	147	295	329	E3H (x3)
	25	24.32	49	49520	256	0.0574	127	207	432	482	94	153	321	358	87	141	295	329	
	28	27.65	43	49520	225	0.0477	127	207	432	482	94	153	321	358	87	141	295	329	
	31.5	31.20	38	49520	199	0.0352	134	206	432	482	99	153	321	358	91	140	295	329	
	35.5	34.80	34	49520	179	0.0323	131	206	432	482	97	153	321	358	89	140	295	329	
	40	39.56	30	49520	157	0.0275	127	206	432	482	94	153	321	358	87	140	295	329	
	45	44.40	27	49520	140	0.0257	127	206	432	482	94	153	321	358	87	140	295	329	
	50	48.33	25	49520	129	0.0189	127	206	432	482	94	153	321	358	87	140	295	329	
	56	54.94	22	48741	111	0.0164	127	206	432	482	94	153	321	358	87	140	295	329	
	63	61.67	19	49520	101	0.0155	127	206	432	482	94	153	321	358	87	140	295	329	
	71	69.33	17	49855	90	0.0100	127	206	432	482	94	153	321	358	87	140	295	329	
	80	77.33	16	49855	81	0.0094	127	206	432	482	94	153	321	358	87	140	295	329	
	90	87.90	14	48741	70	0.0084	127	206	432	482	94	153	321	358	87	140	295	329	
	100	98.67	12	49855	63	0.0081	141	222	432	482	105	165	321	358	97	152	295	329	
	112	108.27	11	49855	58	0.0052	127	206	432	482	94	153	321	358	87	140	295	329	
	125	123.07	10	47780	49	0.0048	127	206	432	482	94	153	321	358	87	140	295	329	
	140	138.13	9	49855	45	0.0046	137	215	432	482	102	160	321	358	93	147	295	329	
	100	98.33	12	49855	64	0.0089	95	154	323	361	70	115	240	268	65	105	221	247	E4H (x4)
	112	109.68	11	49855	57	0.0086	95	154	323	361	70	115	240	268	65	105	221	247	
	125	124.67	10	47780	48	0.0081	95	154	323	361	70	115	240	268	65	105	221	247	
	140	139.18	9	49855	45	0.0052	95	154	323	361	70	115	240	268	65	105	221	247	
	160	155.24	8	49855	40	0.0050	95	154	323	361	70	115	240	268	65	105	221	247	
	180	176.46	7	47780	34	0.0048	95	154	323	361	70	115	240	268	65	105	221	247	
	200	198.06	6	49855	32	0.0047	95	154	323	361	70	115	240	268	65	105	221	247	
	224	217.27	6	49855	29	0.0033	95	154	323	361	70	115	240	268	65	105	221	247	
	250	246.97	5	47780	24	0.0031	95	154	323	361	70	115	240	268	65	105	221	247	
	280	277.21	4	49855	23	0.0031	95	154	323	361	70	115	240	268	65	105	221	247	
	315	320.29	4	49855	20	0.0015	95	154	323	361	70	115	240	268	65	105	221	247	
	355	357.24	3	49855	18	0.0015	95	154	323	361	70	115	240	268	65	105	221	247	
	400	406.08	3	46829	14	0.0014	95	154	323	361	70	115	240	268	65	105	221	247	
	450	455.79	3	49711	14	0.0014	95	154	323	361	70	115	240	268	65	105	221	247	
	500	488.86	2	49711	13	0.0010	95	154	323	361	70	115	240	268	65	105	221	247	
	560	555.68	2	46829	11	0.0009	95	154	323	361	70	115	240	268	65	105	221	247	
	630	623.71	2	49711	10	0.0009	95	154	323	361	70	115	240	268	65	105	221	247	

E2H / E3H / E4H ...31 — MONOBLOCK HOUSING — 60 Hz — 50 kNm

n_1 = 1800 rpm

i_N	i_{eff}	n_2 [rpm]	T_{2N} [Nm]	P_N [kW]	J [Kgm²]	R1 P_{t0} [kW]	R1	R1 H_2O	R1 $+H_2O$	S5 P_{t0} [kW]	S5	S5 H_2O	S5 $+H_2O$	T6 P_{t0} [kW]	T6	T6 H_2O	T6 $+H_2O$	Type
5.6	5.45	330	40821	1412	0.4274	178	370	528	828	133	275	392	615	122	253	360	565	E2H (x2)
6.3	6.13	294	41824	1286	0.3479	178	385	547	837	133	286	406	622	122	263	373	572	
7.1	6.90	261	43832	1197	0.2880	178	416	553	826	133	309	411	614	122	284	378	564	
8	7.80	231	45505	1100	0.2376	178	429	549	810	133	319	408	602	122	293	375	553	
9	8.67	208	42159	917	0.2014	178	442	549	805	133	329	408	598	122	302	375	550	
10	9.90	182	43832	835	0.1638	184	431	534	775	137	320	396	576	126	294	364	529	
11.2	10.83	166	49185	856	0.1473	185	419	512	743	138	311	380	552	127	286	350	507	
12.5	12.28	147	49185	755	0.1196	181	406	496	719	135	301	369	534	124	277	339	491	
14	13.51	133	49520	691	0.1068	178	380	487	673	133	283	362	500	122	260	333	460	
16	15.60	115	49520	598	0.0852	178	370	487	655	133	275	362	487	122	253	333	447	
18	17.33	104	49520	539	0.0746	178	370	487	655	133	275	362	487	122	253	333	447	
20	19.33	93	49520	483	0.0649	178	370	487	655	133	275	362	487	122	253	333	447	
22.4	21.98	82	49520	425	0.0498	178	370	487	655	133	275	362	487	122	253	333	447	
25	24.67	73	49520	378	0.0438	178	370	487	655	133	275	362	487	122	253	333	447	
22.4	21.81	83	49520	428	0.0635	120	258	406	546	89	192	302	405	82	176	278	373	E3H (x3)
25	24.32	74	49520	384	0.0574	119	247	406	546	89	184	302	405	81	169	278	373	
28	27.65	65	49520	338	0.0477	119	247	406	546	89	184	302	405	81	169	278	373	
31.5	31.20	58	49520	299	0.0352	126	246	406	546	94	183	302	405	86	168	278	373	
35.5	34.80	52	49520	268	0.0323	123	246	406	546	92	183	302	405	84	168	278	373	
40	39.56	46	49520	236	0.0275	119	246	406	546	89	183	302	405	82	168	278	373	
45	44.40	41	49520	210	0.0257	119	246	406	546	89	183	302	405	81	168	278	373	
50	48.33	37	49520	193	0.0189	119	246	406	546	89	183	302	405	81	168	278	373	
56	54.94	33	48741	167	0.0164	119	246	406	546	89	183	302	405	81	168	278	373	
63	61.67	29	49520	151	0.0155	119	246	406	546	89	183	302	405	81	168	278	373	
71	69.33	26	49855	136	0.0100	119	246	406	546	89	183	302	405	81	168	278	373	
80	77.33	23	49855	122	0.0094	119	246	406	546	89	183	302	405	81	168	278	373	
90	87.90	20	48741	105	0.0084	119	246	406	546	89	183	302	405	81	168	278	373	
100	98.67	18	49855	95	0.0081	133	266	406	546	99	197	302	405	91	181	278	373	
112	108.27	17	49855	87	0.0052	119	246	406	546	89	183	302	405	81	168	278	373	
125	123.07	15	47780	73	0.0048	119	246	406	546	89	183	302	405	81	168	278	373	
140	138.13	13	49855	68	0.0046	129	257	406	546	96	191	302	405	88	176	278	373	
100	98.33	18	49855	96	0.0089	89	185	305	409	66	137	226	304	61	126	208	280	E4H (x4)
112	109.68	16	49855	86	0.0086	89	185	305	409	66	137	226	304	61	126	208	280	
125	124.67	14	47780	72	0.0081	89	185	305	409	66	137	226	304	61	126	208	280	
140	139.18	13	49855	68	0.0052	89	185	305	409	66	137	226	304	61	126	208	280	
160	155.24	12	49855	61	0.0050	89	185	305	409	66	137	226	304	61	126	208	280	
180	176.46	10	47780	51	0.0048	89	185	305	409	66	137	226	304	61	126	208	280	
200	198.06	9	49855	47	0.0047	89	185	305	409	66	137	226	304	61	126	208	280	
224	217.27	8	49855	43	0.0033	89	185	305	409	66	137	226	304	61	126	208	280	
250	246.97	7	47780	36	0.0031	89	185	305	409	66	137	226	304	61	126	208	280	
280	277.21	6	49855	34	0.0031	89	185	305	409	66	137	226	304	61	126	208	280	
315	320.29	6	49855	29	0.0015	89	185	305	409	66	137	226	304	61	126	208	280	
355	357.24	5	49855	26	0.0015	89	185	305	409	66	137	226	304	61	126	208	280	
400	406.08	4	46829	22	0.0014	89	185	305	409	66	137	226	304	61	126	208	280	
450	455.79	4	49711	21	0.0014	89	185	305	409	66	137	226	304	61	126	208	280	
500	488.86	4	49711	19	0.0010	89	185	305	409	66	137	226	304	61	126	208	280	
560	555.68	3	46829	16	0.0009	89	185	305	409	66	137	226	304	61	126	208	280	
630	623.71	3	49711	15	0.0009	89	185	305	409	66	137	226	304	61	126	208	280	

E3B / E4B ...18 — MONOBLOCK HOUSING — 50 Hz — 10 kNm

	i_N	i_{eff}	n_2 [rpm]	T_{2N} [Nm]	P_N [kW]	J [Kgm²]	R1 P_{t0} [kW]	R1	R1 H_2O	R1 +H_2O	S5 P_{t0} [kW]	S5	S5 H_2O	S5 +H_2O	T6 P_{t0} [kW]	T6	T6 H_2O	T6 +H_2O	Type
n_1 = 1000 rpm	**9**	8.85	113	6596	78	0.0214	53	90	79	121	39	67	58	90	36	62	54	83	
	10	10.11	99	7443	77	0.0195	53	90	79	121	39	67	58	90	36	62	54	83	
	11.2	11.06	90	8048	76	0.0185	53	90	79	121	39	67	58	90	36	62	54	83	
	12.5	12.54	80	8956	75	0.0171	53	90	79	121	39	67	58	90	36	62	54	83	
	14	13.79	72	9500	72	0.0163	53	90	79	121	39	67	58	90	36	62	54	83	
	16	15.93	63	9500	62	0.0150	53	90	79	121	39	67	58	90	36	62	54	83	
	18	17.70	56	9457	56	0.0139	52	91	79	122	39	68	59	91	36	62	54	84	
	20	19.74	51	9457	50	0.0134	54	91	79	122	40	67	59	91	37	62	54	83	
	22.4	22.40	45	9515	44	0.0126	52	89	77	119	39	66	58	89	36	61	53	81	**E3B**
	25	25.41	39	9366	39	0.0072	46	78	70	105	34	58	52	78	31	53	48	72	x3
	28	28.34	35	9366	35	0.0069	45	76	70	102	34	57	52	76	31	52	48	70	
	31.5	32.16	31	9366	30	0.0066	44	74	70	100	33	55	52	74	30	51	48	68	
	35.5	35.39	28	9366	28	0.0041	38	64	70	86	28	47	52	64	26	43	48	59	
	40	39.48	25	9366	25	0.0040	37	61	70	84	27	45	52	62	25	42	48	57	
	45	44.80	22	9366	22	0.0038	37	60	70	84	27	45	52	62	25	41	48	57	
	50	50.82	20	9366	19	0.0022	37	51	70	84	27	38	52	62	25	35	48	57	
	56	56.69	18	9366	17	0.0022	37	51	70	84	27	38	52	62	25	35	48	57	
	63	64.32	16	9366	15	0.0021	37	51	70	84	27	38	52	62	25	35	48	57	
	71	71.15	14	9016	13	0.0020	37	51	70	84	27	38	52	62	25	35	48	57	
	80	81.20	12	9191	12	0.0032	32	55	56	74	24	41	41	55	22	37	38	50	
	90	90.57	11	9191	11	0.0031	31	53	56	71	23	39	41	53	21	36	38	49	
	100	102.77	10	9191	9	0.0031	32	54	56	73	24	40	41	54	22	37	38	50	
	112	116.60	9	9191	8	0.0016	30	50	56	67	22	37	41	50	20	34	38	46	
	125	130.05	8	9191	7	0.0015	29	48	56	67	22	36	41	50	20	33	38	46	
	140	147.57	7	9191	7	0.0015	30	49	56	67	22	36	41	50	20	33	38	46	**E4B**
	160	162.40	6	9191	6	0.0009	29	44	56	67	22	33	41	50	20	30	38	46	x4
	180	181.14	6	9191	5	0.0009	29	43	56	67	22	32	41	50	20	29	38	46	
	200	205.54	5	9191	5	0.0009	29	43	56	67	22	32	41	50	20	29	38	46	
	224	233.19	4	9191	4	0.0005	29	41	56	67	22	30	41	50	20	28	38	46	
	250	260.10	4	9191	4	0.0005	29	41	56	67	22	30	41	50	20	28	38	46	
	280	295.13	3	9191	3	0.0005	29	41	56	67	22	30	41	50	20	28	38	46	
	315	326.47	3	8844	3	0.0005	29	41	56	67	22	30	41	50	20	28	38	46	

For tunnel bell housings with an integrated fan, please refer to the calculation method presented on page 25.
Dimensions of motor bell housing are shown in page 272.

E3B / E4B ...18 — MONOBLOCK HOUSING — 50 Hz — 10 kNm

	i_N	i_{eff}	n_2 [rpm]	T_{2N} [Nm]	P_N [kW]	J [Kgm²]	R1 P_{t0} [kW]	R1	R1 H_2O	R1 $+H_2O$	S5 P_{t0} [kW]	S5	S5 H_2O	S5 $+H_2O$	T6 P_{t0} [kW]	T6	T6 H_2O	T6 $+H_2O$	Type
n_1 = 1500 rpm	**9**	8.85	170	6596	117	0.0214	50	120	75	144	37	89	56	107	34	82	51	99	
	10	10.11	148	7443	116	0.0195	50	120	75	144	37	89	56	107	34	82	51	99	
	11.2	11.06	136	8048	114	0.0185	50	120	75	144	37	89	56	107	34	82	51	99	
	12.5	12.54	120	8956	112	0.0171	50	120	75	144	37	89	56	107	34	82	51	99	
	14	13.79	109	9500	108	0.0163	50	120	75	144	37	89	56	107	34	82	51	99	
	16	15.93	94	9500	94	0.0150	50	120	75	144	37	89	56	107	34	82	51	99	
	18	17.70	85	9457	84	0.0139	50	121	75	146	37	90	56	108	34	83	51	99	
	20	19.74	76	9457	75	0.0134	51	121	75	145	38	90	56	108	35	83	52	99	
	22.4	22.40	67	9515	67	0.0126	50	118	74	142	37	88	55	106	34	81	50	97	**E3B** (x3)
	25	25.41	59	9366	58	0.0072	44	104	67	125	32	77	50	93	30	71	46	85	
	28	28.34	53	9366	52	0.0069	43	101	67	122	32	75	50	90	29	69	46	83	
	31.5	32.16	47	9366	46	0.0066	42	99	67	119	31	74	50	88	29	68	46	81	
	35.5	35.39	42	9366	42	0.0041	36	85	67	102	27	63	50	76	24	58	46	70	
	40	39.48	38	9366	37	0.0040	35	81	67	100	26	60	50	74	24	56	46	68	
	45	44.80	33	9366	33	0.0038	35	80	67	100	26	59	50	74	24	55	46	68	
	50	50.82	30	9366	29	0.0022	35	68	67	100	26	51	50	74	24	47	46	68	
	56	56.69	26	9366	26	0.0022	35	68	67	100	26	51	50	74	24	46	46	68	
	63	64.32	23	9366	23	0.0021	35	68	67	100	26	51	50	74	24	46	46	68	
	71	71.15	21	9016	20	0.0020	35	68	67	100	26	51	50	74	24	46	46	68	
	80	81.20	18	9191	18	0.0032	31	73	53	88	23	54	39	65	21	50	36	60	
	90	90.57	17	9191	16	0.0031	30	71	53	85	22	53	39	63	20	48	36	58	
	100	102.77	15	9191	14	0.0031	31	72	53	86	23	54	39	64	21	49	36	59	
	112	116.60	13	9191	12	0.0016	28	66	53	80	21	49	39	60	19	45	36	55	
	125	130.05	12	9191	11	0.0015	28	64	53	80	21	48	39	59	19	44	36	55	
	140	147.57	10	9191	10	0.0015	28	65	53	80	21	48	39	59	19	45	36	55	**E4B** (x4)
	160	162.40	9	9191	9	0.0009	28	59	53	80	21	44	39	59	19	40	36	55	
	180	181.14	8	9191	8	0.0009	28	57	53	80	21	42	39	59	19	39	36	55	
	200	205.54	7	9191	7	0.0009	28	58	53	80	21	43	39	59	19	39	36	55	
	224	233.19	6	9191	6	0.0005	28	54	53	80	21	40	39	59	19	37	36	55	
	250	260.10	6	9191	6	0.0005	28	54	53	80	21	40	39	59	19	37	36	55	
	280	295.13	5	9191	5	0.0005	28	54	53	80	21	40	39	59	19	37	36	55	
	315	326.47	5	8844	4	0.0005	28	54	53	80	21	40	39	59	19	37	36	55	

For tunnel bell housings with an integrated fan, please refer to the calculation method presented on page 25.
Dimensions of motor bell housing are shown in page 272.

E3B / E4B ...18 — MONOBLOCK HOUSING — 60 Hz — 10 kNm

	i_N	i_{eff}	n_2 [rpm]	T_{2N} [Nm]	P_N [kW]	J [Kgm²]	R1 P_{t0} [kW]	R1	R1 H_2O	R1 +H_2O	S5 P_{t0} [kW]	S5	S5 H_2O	S5 +H_2O	T6 P_{t0} [kW]	T6	T6 H_2O	T6 +H_2O	Type
n_1 = 1200 rpm	**9**	8.85	136	6596	94	0.0214	52	103	77	130	39	77	57	96	35	71	53	89	
	10	10.11	119	7443	92	0.0195	52	103	77	130	39	77	57	96	35	71	53	89	
	11.2	11.06	108	8048	91	0.0185	52	103	77	130	39	77	57	96	35	71	53	89	
	12.5	12.54	96	8956	90	0.0171	52	103	77	130	39	77	57	96	35	71	53	89	
	14	13.79	87	9500	87	0.0163	52	103	77	130	39	77	57	96	35	71	53	89	
	16	15.93	75	9500	75	0.0150	52	103	77	130	39	77	57	96	35	71	53	89	
	18	17.70	68	9457	67	0.0139	51	104	78	131	38	78	58	97	35	71	53	90	
	20	19.74	61	9457	60	0.0134	53	104	78	131	39	77	58	97	36	71	53	89	
	22.4	22.40	54	9515	53	0.0126	51	102	76	128	38	76	56	95	35	70	52	87	**E3B** x3
	25	25.41	47	9366	46	0.0072	45	90	69	113	33	67	51	84	31	61	47	77	
	28	28.34	42	9366	42	0.0069	44	87	69	110	33	65	51	81	30	60	47	75	
	31.5	32.16	37	9366	37	0.0066	43	85	69	107	32	63	51	79	30	58	47	73	
	35.5	35.39	34	9366	33	0.0041	37	73	69	92	27	54	51	68	25	50	47	63	
	40	39.48	30	9366	30	0.0040	36	70	69	90	27	52	51	67	25	48	47	61	
	45	44.80	27	9366	26	0.0038	36	69	69	90	27	51	51	67	25	47	47	61	
	50	50.82	24	9366	23	0.0022	36	59	69	90	27	44	51	67	25	40	47	61	
	56	56.69	21	9366	21	0.0022	36	58	69	90	27	43	51	67	25	40	47	61	
	63	64.32	19	9366	18	0.0021	36	58	69	90	27	43	51	67	25	40	47	61	
	71	71.15	17	9016	16	0.0020	36	58	69	90	27	43	51	67	25	40	47	61	
	80	81.20	15	9191	14	0.0032	32	63	55	79	24	47	41	59	22	43	37	54	
	90	90.57	13	9191	13	0.0031	31	61	55	76	23	45	41	57	21	42	37	52	
	100	102.77	12	9191	11	0.0031	31	62	55	78	23	46	41	58	21	42	37	53	
	112	116.60	10	9191	10	0.0016	29	57	55	72	22	42	41	54	20	39	37	49	
	125	130.05	9	9191	9	0.0015	29	55	55	72	21	41	41	53	20	38	37	49	
	140	147.57	8	9191	8	0.0015	29	56	55	72	22	42	41	53	20	38	37	49	**E4B** x4
	160	162.40	7	9191	7	0.0009	29	50	55	72	21	37	41	53	20	34	37	49	
	180	181.14	7	9191	6	0.0009	29	49	55	72	21	36	41	53	20	33	37	49	
	200	205.54	6	9191	6	0.0009	29	49	55	72	21	37	41	53	20	34	37	49	
	224	233.19	5	9191	5	0.0005	29	47	55	72	21	35	41	53	20	32	37	49	
	250	260.10	5	9191	4	0.0005	29	47	55	72	21	35	41	53	20	32	37	49	
	280	295.13	4	9191	4	0.0005	29	47	55	72	21	35	41	53	20	32	37	49	
	315	326.47	4	8844	3	0.0005	29	47	55	72	21	35	41	53	20	32	37	49	

For tunnel bell housings with an integrated fan, please refer to the calculation method presented on page 25.
Dimensions of motor bell housing are shown in page 272.

E3B / E4B ...18 — MONOBLOCK HOUSING — 60 Hz — 10 kNm

	i_N	i_{eff}	n_2 [rpm]	T_{2N} [Nm]	P_N [kW]	J [Kgm²]	R1 P_{t0} [kW]	R1	R1 H_2O	R1 $+H_2O$	S5 P_{t0} [kW]	S5	S5 H_2O	S5 $+H_2O$	T6 P_{t0} [kW]	T6	T6 H_2O	T6 $+H_2O$	Type
n_1 = 1800 rpm	**9**	8.85	203	6596	141	0.0214	49	124	73	147	36	92	54	109	33	85	50	101	
	10	10.11	178	7443	139	0.0195	49	124	73	147	36	92	54	109	33	85	50	101	
	11.2	11.06	163	8048	137	0.0185	49	124	73	147	36	92	54	109	33	85	50	101	
	12.5	12.54	144	8956	135	0.0171	49	124	73	147	36	92	54	109	33	85	50	101	
	14	13.79	130	9500	130	0.0163	49	124	73	147	36	92	54	109	33	85	50	101	
	16	15.93	113	9500	112	0.0150	49	124	73	147	36	92	54	109	33	85	50	101	
	18	17.70	102	9457	101	0.0139	48	125	73	149	36	93	54	110	33	85	50	101	
	20	19.74	91	9457	90	0.0134	50	125	73	148	37	93	54	110	34	85	50	101	
	22.4	22.40	80	9515	80	0.0126	48	122	72	145	36	91	53	108	33	83	49	99	**E3B**
	25	25.41	71	9366	69	0.0072	42	107	65	128	31	80	48	95	29	73	44	87	
	28	28.34	64	9366	62	0.0069	42	105	65	124	31	78	48	92	28	71	44	85	
	31.5	32.16	56	9366	55	0.0066	41	102	65	121	30	76	48	90	28	70	44	83	
	35.5	35.39	51	9366	50	0.0041	35	87	65	104	26	65	48	77	24	60	44	71	
	40	39.48	46	9366	45	0.0040	34	84	65	102	25	62	48	76	23	57	44	70	
	45	44.80	40	9366	39	0.0038	34	82	65	102	25	61	48	76	23	56	44	70	
	50	50.82	35	9366	35	0.0022	34	70	65	102	25	52	48	76	23	48	44	70	
	56	56.69	32	9366	31	0.0022	34	70	65	102	25	52	48	76	23	48	44	70	
	63	64.32	28	9366	27	0.0021	34	70	65	102	25	52	48	76	23	48	44	70	
	71	71.15	25	9016	24	0.0020	34	70	65	102	25	52	48	76	23	48	44	70	
	80	81.20	22	9191	21	0.0032	30	75	51	89	22	56	38	66	20	51	35	61	
	90	90.57	20	9191	19	0.0031	29	73	51	87	22	54	38	64	20	50	35	59	
	100	102.77	18	9191	17	0.0031	30	74	51	88	22	55	38	66	20	51	35	60	
	112	116.60	15	9191	15	0.0016	27	68	51	82	20	51	38	61	19	46	35	56	
	125	130.05	14	9191	13	0.0015	27	66	51	82	20	49	38	61	19	45	35	56	
	140	147.57	12	9191	12	0.0015	27	67	51	82	20	50	38	61	19	46	35	56	**E4B**
	160	162.40	11	9191	11	0.0009	27	60	51	82	20	45	38	61	19	41	35	56	
	180	181.14	10	9191	10	0.0009	27	59	51	82	20	43	38	61	19	40	35	56	
	200	205.54	9	9191	8	0.0009	27	59	51	82	20	44	38	61	19	40	35	56	
	224	233.19	8	9191	7	0.0005	27	56	51	82	20	42	38	61	19	38	35	56	
	250	260.10	7	9191	7	0.0005	27	56	51	82	20	42	38	61	19	38	35	56	
	280	295.13	6	9191	6	0.0005	27	56	51	82	20	42	38	61	19	38	35	56	
	315	326.47	6	8844	5	0.0005	27	56	51	82	20	42	38	61	19	38	35	56	

For tunnel bell housings with an integrated fan, please refer to the calculation method presented on page 25.
Dimensions of motor bell housing are shown in page 272.

E3B / E4B ...19 — MONOBLOCK HOUSING — 50 Hz — 13 kNm

	i_N	i_{eff}	n_2 [rpm]	T_{2N} [Nm]	P_N [kW]	J [Kgm²]	R1 P_{t0} [kW]	R1	R1 H_2O	R1 +H_2O	S5 P_{t0} [kW]	S5	S5 H_2O	S5 +H_2O	T6 P_{t0} [kW]	T6	T6 H_2O	T6 +H_2O	Type
n_1 = 1000 rpm	**11.2**	10.98	91	8116	77	0.0234	52	90	102	119	39	67	76	89	36	61	70	82	E3B (x3)
	12.5	12.55	80	9184	77	0.0210	52	90	102	119	39	67	76	89	36	61	70	82	
	14	13.72	73	9895	76	0.0198	52	90	102	119	39	67	76	89	36	61	70	82	
	16	15.55	64	11035	74	0.0181	52	90	102	119	39	67	76	89	36	61	70	82	
	18	17.11	58	11960	73	0.0171	52	90	102	119	39	67	76	89	36	61	70	82	
	20	19.76	51	12301	65	0.0156	52	90	102	119	39	67	76	89	36	61	70	82	
	22.4	21.96	46	12301	59	0.0144	57	98	102	130	43	73	76	97	39	67	70	89	
	25	24.49	41	12301	53	0.0138	50	87	102	115	37	64	76	85	34	59	70	79	
	28	27.79	36	11960	45	0.0129	49	84	102	113	37	63	76	84	34	58	70	77	
	31.5	31.53	32	12301	41	0.0074	48	82	102	113	36	61	76	84	33	56	70	77	
	35.5	35.17	28	12301	37	0.0071	42	70	102	113	31	52	76	84	29	48	70	77	
	40	39.90	25	11858	31	0.0067	41	68	102	113	31	50	76	84	28	46	70	77	
	45	43.92	23	12078	29	0.0043	41	66	102	113	31	49	76	84	28	45	70	77	
	50	48.98	20	12078	26	0.0041	41	58	102	113	31	43	76	84	28	39	70	77	
	56	55.58	18	11858	22	0.0039	41	58	102	113	31	43	76	84	28	39	70	77	
	63	63.06	16	12078	20	0.0023	41	58	102	113	31	43	76	84	28	39	70	77	
	71	70.33	14	12078	18	0.0022	41	58	102	113	31	43	76	84	28	39	70	77	
	80	79.81	13	11639	15	0.0021	41	58	102	113	31	43	76	84	28	39	70	77	
	90	88.28	11	11208	13	0.0021	41	58	102	113	31	43	76	84	28	39	70	77	
	100	100.75	10	12078	13	0.0032	35	60	82	91	26	44	61	67	24	41	56	62	E4B (x4)
	112	112.37	9	12078	11	0.0031	34	55	82	91	25	41	61	67	23	37	56	62	
	125	127.51	8	11639	10	0.0031	34	53	82	91	25	40	61	67	23	36	56	62	
	140	144.66	7	11858	9	0.0016	34	54	82	91	25	40	61	67	23	37	56	62	
	160	161.36	6	11858	8	0.0015	34	49	82	91	25	36	61	67	23	33	56	62	
	180	183.09	5	11639	7	0.0015	34	47	82	91	25	35	61	67	23	32	56	62	
	200	201.50	5	11858	6	0.0009	34	48	82	91	25	35	61	67	23	33	56	62	
	224	224.75	4	11858	6	0.0009	34	46	82	91	25	34	61	67	23	32	56	62	
	250	255.02	4	11423	5	0.0009	34	46	82	91	25	34	61	67	23	32	56	62	
	280	289.33	3	11858	4	0.0005	34	46	82	91	25	34	61	67	23	32	56	62	
	315	322.71	3	11858	4	0.0005	34	46	82	91	25	34	61	67	23	32	56	62	
	355	366.18	3	11423	3	0.0005	34	46	82	91	25	34	61	67	23	32	56	62	
	400	405.06	2	10996	3	0.0005	34	46	82	91	25	34	61	67	23	32	56	62	

For tunnel bell housings with an integrated fan, please refer to the calculation method presented on page 25.
Dimensions of motor bell housing are shown in page 272.

E3B / E4B ...19 — MONOBLOCK HOUSING — 50 Hz — 13 kNm

n_1 = 1500 rpm

i_N	i_{eff}	n_2 [rpm]	T_{2N} [Nm]	P_N [kW]	J [Kgm²]	R1 P_{t0} [kW]	R1	R1 H_2O	R1 $+H_2O$	S5 P_{t0} [kW]	S5	S5 H_2O	S5 $+H_2O$	T6 P_{t0} [kW]	T6	T6 H_2O	T6 $+H_2O$	Type
11.2	10.98	137	8116	116	0.0234	50	120	98	142	37	89	72	106	34	82	67	97	
12.5	12.55	120	9184	115	0.0210	50	120	98	142	37	89	72	106	34	82	67	97	
14	13.72	109	9895	113	0.0198	50	120	98	142	37	89	72	106	34	82	67	97	
16	15.55	96	11035	111	0.0181	50	120	98	142	37	89	72	106	34	82	67	97	
18	17.11	88	11960	110	0.0171	50	120	98	142	37	89	72	106	34	82	67	97	
20	19.76	76	12301	98	0.0156	50	120	98	142	37	89	72	106	34	82	67	97	
22.4	21.96	68	12301	88	0.0144	55	131	98	155	41	97	72	115	37	90	67	106	
25	24.49	61	12301	79	0.0138	48	116	98	137	35	86	72	102	33	79	67	93	
28	27.79	54	11960	68	0.0129	47	112	98	135	35	84	72	100	32	77	67	92	**E3B**
31.5	31.53	48	12301	61	0.0074	46	110	98	135	34	82	72	100	31	75	67	92	x3
35.5	35.17	43	12301	55	0.0071	40	94	98	135	30	70	72	100	27	64	67	92	
40	39.90	38	11858	47	0.0067	40	90	98	135	29	67	72	100	27	62	67	92	
45	43.92	34	12078	43	0.0043	40	88	98	135	29	66	72	100	27	60	67	92	
50	48.98	31	12078	39	0.0041	40	77	98	135	29	57	72	100	27	53	67	92	
56	55.58	27	11858	34	0.0039	40	77	98	135	29	57	72	100	27	53	67	92	
63	63.06	24	12078	30	0.0023	40	77	98	135	29	57	72	100	27	53	67	92	
71	70.33	21	12078	27	0.0022	40	77	98	135	29	57	72	100	27	53	67	92	
80	79.81	19	11639	23	0.0021	40	77	98	135	29	57	72	100	27	53	67	92	
90	88.28	17	11208	20	0.0021	40	77	98	135	29	57	72	100	27	53	67	92	
100	100.75	15	12078	19	0.0032	33	80	78	108	25	59	58	80	23	55	53	74	
112	112.37	13	12078	17	0.0031	32	73	78	108	24	54	58	80	22	50	53	74	
125	127.51	12	11639	14	0.0031	32	71	78	108	24	53	58	80	22	49	53	74	
140	144.66	10	11858	13	0.0016	32	72	78	108	24	54	58	80	22	49	53	74	
160	161.36	9	11858	12	0.0015	32	65	78	108	24	48	58	80	22	44	53	74	
180	183.09	8	11639	10	0.0015	32	63	78	108	24	47	58	80	22	43	53	74	**E4B**
200	201.50	7	11858	9	0.0009	32	64	78	108	24	47	58	80	22	44	53	74	x4
224	224.75	7	11858	8	0.0009	32	62	78	108	24	46	58	80	22	42	53	74	
250	255.02	6	11423	7	0.0009	32	62	78	108	24	46	58	80	22	42	53	74	
280	289.33	5	11858	6	0.0005	32	62	78	108	24	46	58	80	22	42	53	74	
315	322.71	5	11858	6	0.0005	32	62	78	108	24	46	58	80	22	42	53	74	
355	366.18	4	11423	5	0.0005	32	62	78	108	24	46	58	80	22	42	53	74	
400	405.06	4	10996	4	0.0005	32	62	78	108	24	46	58	80	22	42	53	74	

For tunnel bell housings with an integrated fan, please refer to the calculation method presented on page 25.
Dimensions of motor bell housing are shown in page 272.

E3B / E4B ...19 — MONOBLOCK HOUSING — 60 Hz — 13 kNm

	i_N	i_{eff}	n_2 [rpm]	T_{2N} [Nm]	P_N [kW]	J [Kgm²]	R1 P_{t0} [kW]	R1	R1 H_2O	R1 +H_2O	S5 P_{t0} [kW]	S5	S5 H_2O	S5 +H_2O	T6 P_{t0} [kW]	T6	T6 H_2O	T6 +H_2O	Type
n_1 = 1200 rpm	**11.2**	10.98	109	8116	93	0.0234	51	103	100	128	38	76	75	95	35	70	69	87	
	12.5	12.55	96	9184	92	0.0210	51	103	100	128	38	76	75	95	35	70	69	87	
	14	13.72	87	9895	91	0.0198	51	103	100	128	38	76	75	95	35	70	69	87	
	16	15.55	77	11035	89	0.0181	51	103	100	128	38	76	75	95	35	70	69	87	
	18	17.11	70	11960	88	0.0171	51	103	100	128	38	76	75	95	35	70	69	87	
	20	19.76	61	12301	78	0.0156	51	103	100	128	38	76	75	95	35	70	69	87	
	22.4	21.96	55	12301	70	0.0144	56	113	100	139	42	84	75	104	39	77	69	95	
	25	24.49	49	12301	63	0.0138	49	99	100	123	37	74	75	92	34	68	69	84	
	28	27.79	43	11960	54	0.0129	48	97	100	122	36	72	75	90	33	66	69	83	**E3B**
	31.5	31.53	38	12301	49	0.0074	47	94	100	122	35	70	75	90	32	64	69	83	x3
	35.5	35.17	34	12301	44	0.0071	41	81	100	122	30	60	75	90	28	55	69	83	
	40	39.90	30	11858	37	0.0067	41	78	100	122	30	58	75	90	28	53	69	83	
	45	43.92	27	12078	35	0.0043	41	76	100	122	30	57	75	90	28	52	69	83	
	50	48.98	24	12078	31	0.0041	41	66	100	122	30	49	75	90	28	45	69	83	
	56	55.58	22	11858	27	0.0039	41	66	100	122	30	49	75	90	28	45	69	83	
	63	63.06	19	12078	24	0.0023	41	66	100	122	30	49	75	90	28	45	69	83	
	71	70.33	17	12078	22	0.0022	41	66	100	122	30	49	75	90	28	45	69	83	
	80	79.81	15	11639	18	0.0021	41	66	100	122	30	49	75	90	28	45	69	83	
	90	88.28	14	11208	16	0.0021	41	66	100	122	30	49	75	90	28	45	69	83	
	100	100.75	12	12078	15	0.0032	34	69	80	97	26	51	60	72	23	47	55	66	
	112	112.37	11	12078	14	0.0031	33	63	80	97	24	47	60	72	23	43	55	66	
	125	127.51	9	11639	11	0.0031	33	61	80	97	24	45	60	72	23	42	55	66	
	140	144.66	8	11858	10	0.0016	33	62	80	97	24	46	60	72	23	42	55	66	
	160	161.36	7	11858	9	0.0015	33	56	80	97	24	41	60	72	23	38	55	66	
	180	183.09	7	11639	8	0.0015	33	54	80	97	24	40	60	72	23	37	55	66	**E4B**
	200	201.50	6	11858	7	0.0009	33	55	80	97	24	41	60	72	23	37	55	66	x4
	224	224.75	5	11858	7	0.0009	33	53	80	97	24	39	60	72	23	36	55	66	
	250	255.02	5	11423	6	0.0009	33	53	80	97	24	39	60	72	23	36	55	66	
	280	289.33	4	11858	5	0.0005	33	53	80	97	24	39	60	72	23	36	55	66	
	315	322.71	4	11858	5	0.0005	33	53	80	97	24	39	60	72	23	36	55	66	
	355	366.18	3	11423	4	0.0005	33	53	80	97	24	39	60	72	23	36	55	66	
	400	405.06	3	10996	3	0.0005	33	53	80	97	24	39	60	72	23	36	55	66	

For tunnel bell housings with an integrated fan, please refer to the calculation method presented on page 25.
Dimensions of motor bell housing are shown in page 272.

E3B / E4B ...19 — MONOBLOCK HOUSING — 60 Hz — 13 kNm

	i_N	i_{eff}	n_2 [rpm]	T_{2N} [Nm]	P_N [kW]	J [Kgm²]	R1 P_{t0} [kW]	R1	R1 H_2O	R1 $+H_2O$	S5 P_{t0} [kW]	S5	S5 H_2O	S5 $+H_2O$	T6 P_{t0} [kW]	T6	T6 H_2O	T6 $+H_2O$	Type
n_1 = 1800 rpm	**11.2**	10.98	164	8116	139	0.0234	48	123	95	145	36	92	70	108	33	84	65	99	
	12.5	12.55	143	9184	138	0.0210	48	123	95	145	36	92	70	108	33	84	65	99	
	14	13.72	131	9895	136	0.0198	48	123	95	145	36	92	70	108	33	84	65	99	
	16	15.55	116	11035	134	0.0181	48	123	95	145	36	92	70	108	33	84	65	99	
	18	17.11	105	11960	132	0.0171	48	123	95	145	36	92	70	108	33	84	65	99	
	20	19.76	91	12301	117	0.0156	48	123	95	145	36	92	70	108	33	84	65	99	
	22.4	21.96	82	12301	106	0.0144	53	135	95	158	39	100	70	117	36	92	65	108	
	25	24.49	73	12301	95	0.0138	46	119	95	140	34	88	70	104	32	81	65	95	
	28	27.79	65	11960	81	0.0129	46	116	95	138	34	86	70	102	31	79	65	94	**E3B** (x3)
	31.5	31.53	57	12301	74	0.0074	44	113	95	138	33	84	70	102	30	77	65	94	
	35.5	35.17	51	12301	66	0.0071	39	97	95	138	29	72	70	102	26	66	65	94	
	40	39.90	45	11858	56	0.0067	38	93	95	138	28	69	70	102	26	63	65	94	
	45	43.92	41	12078	52	0.0043	38	91	95	138	28	68	70	102	26	62	65	94	
	50	48.98	37	12078	46	0.0041	38	79	95	138	28	59	70	102	26	54	65	94	
	56	55.58	32	11858	40	0.0039	38	79	95	138	28	59	70	102	26	54	65	94	
	63	63.06	29	12078	36	0.0023	38	79	95	138	28	59	70	102	26	54	65	94	
	71	70.33	26	12078	32	0.0022	38	79	95	138	28	59	70	102	26	54	65	94	
	80	79.81	23	11639	27	0.0021	38	79	95	138	28	59	70	102	26	54	65	94	
	90	88.28	20	11208	24	0.0021	38	79	95	138	28	59	70	102	26	54	65	94	
	100	100.75	18	12078	23	0.0032	32	82	76	110	24	61	56	82	22	56	52	75	
	112	112.37	16	12078	20	0.0031	31	75	76	110	23	56	56	82	21	51	52	75	
	125	127.51	14	11639	17	0.0031	31	73	76	110	23	54	56	82	21	50	52	75	
	140	144.66	12	11858	15	0.0016	31	74	76	110	23	55	56	82	21	51	52	75	
	160	161.36	11	11858	14	0.0015	31	67	76	110	23	50	56	82	21	46	52	75	
	180	183.09	10	11639	12	0.0015	31	65	76	110	23	48	56	82	21	44	52	75	**E4B** (x4)
	200	201.50	9	11858	11	0.0009	31	66	76	110	23	49	56	82	21	45	52	75	
	224	224.75	8	11858	10	0.0009	31	63	76	110	23	47	56	82	21	43	52	75	
	250	255.02	7	11423	8	0.0009	31	63	76	110	23	47	56	82	21	43	52	75	
	280	289.33	6	11858	8	0.0005	31	63	76	110	23	47	56	82	21	43	52	75	
	315	322.71	6	11858	7	0.0005	31	63	76	110	23	47	56	82	21	43	52	75	
	355	366.18	5	11423	6	0.0005	31	63	76	110	23	47	56	82	21	43	52	75	
	400	405.06	4	10996	5	0.0005	31	63	76	110	23	47	56	82	21	43	52	75	

For tunnel bell housings with an integrated fan, please refer to the calculation method presented on page 25.
Dimensions of motor bell housing are shown in page 272.

E3B / E4B ...20 — MONOBLOCK HOUSING — 50 Hz — 15 kNm

	i_N	i_{eff}	n_2 [rpm]	T_{2N} [Nm]	P_N [kW]	J [Kgm²]	R1 P_{t0} [kW]	R1	R1 H_2O	R1 + H_2O	S5 P_{t0} [kW]	S5	S5 H_2O	S5 + H_2O	T6 P_{t0} [kW]	T6	T6 H_2O	T6 + H_2O	Type
n_1 = 1000 rpm	**12.5**	12.78	78	9491	78	0.0283	66	114	135	181	49	85	100	135	45	78	92	124	
	14	14.61	68	10807	77	0.0256	66	114	135	181	49	85	100	135	45	78	92	124	
	16	15.98	63	11746	77	0.0242	66	114	135	181	49	85	100	135	45	78	92	124	
	18	18.11	55	13062	76	0.0224	66	114	135	181	49	85	100	135	45	78	92	124	
	20	19.92	50	14190	75	0.0213	66	114	135	181	49	85	100	135	45	78	92	124	
	22.4	23.01	43	14236	65	0.0197	66	114	135	181	49	85	100	135	45	78	92	124	
	25	25.56	39	13961	57	0.0147	65	114	135	182	49	85	101	135	45	78	93	124	
	28	28.51	35	13961	51	0.0140	66	114	135	182	49	85	101	135	45	78	92	124	
	31.5	32.35	31	13961	45	0.0131	65	113	135	180	49	84	100	134	45	77	92	123	**E3B** x3
	35.5	36.71	27	13961	40	0.0076	57	98	134	156	42	73	100	116	39	67	92	106	
	40	40.94	24	13961	36	0.0072	55	96	134	152	41	71	100	113	38	65	92	104	
	45	46.46	22	13961	31	0.0068	55	94	134	150	41	70	100	111	37	64	92	102	
	50	51.13	20	13961	29	0.0043	47	80	134	143	35	59	100	106	32	54	92	98	
	56	57.03	18	13961	26	0.0042	46	77	134	143	34	57	100	106	32	53	92	98	
	63	64.71	15	13961	23	0.0039	46	76	134	143	34	57	100	106	32	52	92	98	
	71	73.41	14	13689	20	0.0023	46	65	134	143	34	48	100	106	32	44	92	98	
	80	81.88	12	13689	18	0.0022	46	65	134	143	34	48	100	106	32	44	92	98	
	90	92.91	11	13689	15	0.0021	46	65	134	143	34	48	100	106	32	44	92	98	
	100	102.78	10	13152	13	0.0021	46	65	134	143	34	48	100	106	32	44	92	98	
	112	117.29	9	13689	12	0.0032	40	69	108	114	30	51	80	85	27	47	74	78	
	125	130.82	8	13689	11	0.0032	39	68	108	114	29	50	80	85	27	46	74	78	
	140	148.44	7	13689	10	0.0031	40	69	108	114	30	51	80	85	27	47	74	78	
	160	168.42	6	13689	9	0.0016	38	62	108	114	28	46	80	85	26	43	74	78	
	180	187.85	5	13689	8	0.0016	38	61	108	114	28	45	80	85	26	42	74	78	
	200	213.15	5	13689	7	0.0015	38	62	108	114	28	46	80	85	26	43	74	78	**E4B** x4
	224	234.58	4	13689	6	0.0009	38	55	108	114	28	41	80	85	26	38	74	78	
	250	261.65	4	13689	5	0.0009	38	54	108	114	28	40	80	85	26	37	74	78	
	280	296.89	3	13419	5	0.0009	38	55	108	114	28	41	80	85	26	38	74	78	
	315	336.83	3	13689	4	0.0005	38	52	108	114	28	38	80	85	26	35	74	78	
	355	375.70	3	13689	4	0.0005	38	52	108	114	28	38	80	85	26	35	74	78	
	400	426.30	2	13419	3	0.0005	38	52	108	114	28	38	80	85	26	35	74	78	
	450	471.56	2	12888	3	0.0005	50	80	118	144	37	60	87	107	34	55	80	98	

For tunnel bell housings with an integrated fan, please refer to the calculation method presented on page 25.
Dimensions of motor bell housing are shown in page 272.

E3B / E4B ...20 — MONOBLOCK HOUSING — 50 Hz — 15 kNm

	i_N	i_{eff}	n_2 [rpm]	T_{2N} [Nm]	P_N [kW]	J [Kgm²]	R1 P_{t0} [kW]	R1	R1 H_2O	R1 $+H_2O$	S5 P_{t0} [kW]	S5	S5 H_2O	S5 $+H_2O$	T6 P_{t0} [kW]	T6	T6 H_2O	T6 $+H_2O$	Type
n_1 = 1500 rpm	**12.5**	12.78	117	9491	117	0.0283	63	152	129	216	47	113	96	160	43	104	88	147	
	14	14.61	103	10807	116	0.0256	63	152	129	216	47	113	96	160	43	104	88	147	
	16	15.98	94	11746	115	0.0242	63	152	129	216	47	113	96	160	43	104	88	147	
	18	18.11	83	13062	113	0.0224	63	152	129	216	47	113	96	160	43	104	88	147	
	20	19.92	75	14190	112	0.0213	63	152	129	216	47	113	96	160	43	104	88	147	
	22.4	23.01	65	14236	97	0.0197	63	152	129	216	47	113	96	160	43	104	88	147	
	25	25.56	59	13961	86	0.0147	62	153	129	217	46	113	96	161	43	104	88	148	
	28	28.51	53	13961	77	0.0140	63	152	129	216	47	113	96	161	43	104	88	148	
	31.5	32.35	46	13961	68	0.0131	62	151	128	214	46	112	95	159	43	103	88	146	**E3B**
	35.5	36.71	41	13961	60	0.0076	54	131	128	186	40	97	95	138	37	89	87	127	x3
	40	40.94	37	13961	54	0.0072	53	127	128	181	39	95	95	134	36	87	87	124	
	45	46.46	32	13961	47	0.0068	52	126	128	178	39	93	95	133	36	86	87	122	
	50	51.13	29	13961	43	0.0043	45	106	128	170	33	79	95	126	30	73	87	116	
	56	57.03	26	13961	38	0.0042	44	103	128	170	33	77	95	126	30	70	87	116	
	63	64.71	23	13961	34	0.0039	44	102	128	170	33	75	95	126	30	69	87	116	
	71	73.41	20	13689	29	0.0023	44	86	128	170	33	64	95	126	30	59	87	116	
	80	81.88	18	13689	26	0.0022	44	86	128	170	33	64	95	126	30	59	87	116	
	90	92.91	16	13689	23	0.0021	44	86	128	170	33	64	95	126	30	59	87	116	
	100	102.78	15	13152	20	0.0021	44	86	128	170	33	64	95	126	30	59	87	116	
	112	117.29	13	13689	18	0.0032	38	92	103	136	28	68	77	101	26	63	70	93	
	125	130.82	11	13689	16	0.0032	37	90	103	136	28	67	77	101	25	62	70	93	
	140	148.44	10	13689	14	0.0031	38	92	103	136	28	68	77	101	26	63	70	93	
	160	168.42	9	13689	13	0.0016	36	83	103	136	27	62	77	101	25	57	70	93	
	180	187.85	8	13689	11	0.0016	36	81	103	136	27	60	77	101	25	56	70	93	
	200	213.15	7	13689	10	0.0015	36	83	103	136	27	62	77	101	25	57	70	93	**E4B**
	224	234.58	6	13689	9	0.0009	36	74	103	136	27	55	77	101	25	51	70	93	x4
	250	261.65	6	13689	8	0.0009	36	72	103	136	27	54	77	101	25	49	70	93	
	280	296.89	5	13419	7	0.0009	36	74	103	136	27	55	77	101	25	50	70	93	
	315	336.83	4	13689	6	0.0005	36	69	103	136	27	51	77	101	25	47	70	93	
	355	375.70	4	13689	6	0.0005	36	69	103	136	27	51	77	101	25	47	70	93	
	400	426.30	4	13419	5	0.0005	36	69	103	136	27	51	77	101	25	47	70	93	
	450	471.56	3	12888	4	0.0005	48	107	112	171	36	79	83	127	33	73	76	117	

For tunnel bell housings with an integrated fan, please refer to the calculation method presented on page 25.
Dimensions of motor bell housing are shown in page 272.

E3B / E4B ...20 — MONOBLOCK HOUSING — 60 Hz — 15 kNm

	i_N	i_{eff}	n_2 [rpm]	T_{2N} [Nm]	P_N [kW]	J [Kgm²]	R1 P_{t0} [kW]	R1	R1 H_2O	R1 +H_2O	S5 P_{t0} [kW]	S5	S5 H_2O	S5 +H_2O	T6 P_{t0} [kW]	T6	T6 H_2O	T6 +H_2O	Type
n_1 = 1200 rpm	**12.5**	12.78	94	9491	93	0.0283	64	131	133	194	48	97	99	144	44	89	91	133	E3B x3
	14	14.61	82	10807	93	0.0256	64	131	133	194	48	97	99	144	44	89	91	133	
	16	15.98	75	11746	92	0.0242	64	131	133	194	48	97	99	144	44	89	91	133	
	18	18.11	66	13062	91	0.0224	64	131	133	194	48	97	99	144	44	89	91	133	
	20	19.92	60	14190	90	0.0213	64	131	133	194	48	97	99	144	44	89	91	133	
	22.4	23.01	52	14236	78	0.0197	64	131	133	194	48	97	99	144	44	89	91	133	
	25	25.56	47	13961	69	0.0147	64	131	133	195	48	98	99	145	44	90	91	133	
	28	28.51	42	13961	62	0.0140	65	131	133	195	48	97	99	145	44	90	91	133	
	31.5	32.35	37	13961	54	0.0131	64	130	132	193	48	96	98	143	44	88	90	132	
	35.5	36.71	33	13961	48	0.0076	56	112	132	167	41	83	98	124	38	77	90	114	
	40	40.94	29	13961	43	0.0072	54	110	132	163	40	81	98	121	37	75	90	111	
	45	46.46	26	13961	38	0.0068	54	108	132	161	40	80	98	119	37	74	90	110	
	50	51.13	23	13961	34	0.0043	46	91	132	153	34	68	98	114	31	62	90	104	
	56	57.03	21	13961	31	0.0042	45	89	132	153	34	66	98	114	31	61	90	104	
	63	64.71	19	13961	27	0.0039	45	87	132	153	34	65	98	114	31	60	90	104	
	71	73.41	16	13689	23	0.0023	45	74	132	153	34	55	98	114	31	51	90	104	
	80	81.88	15	13689	21	0.0022	45	74	132	153	34	55	98	114	31	51	90	104	
	90	92.91	13	13689	19	0.0021	45	74	132	153	34	55	98	114	31	51	90	104	
	100	102.78	12	13152	16	0.0021	45	74	132	153	34	55	98	114	31	51	90	104	
	112	117.29	10	13689	15	0.0032	39	79	106	122	29	59	79	91	27	54	72	84	E4B x4
	125	130.82	9	13689	13	0.0032	38	77	106	122	29	58	79	91	26	53	72	84	
	140	148.44	8	13689	12	0.0031	39	79	106	122	29	59	79	91	27	54	72	84	
	160	168.42	7	13689	10	0.0016	37	71	106	122	28	53	79	91	25	49	72	84	
	180	187.85	6	13689	9	0.0016	37	70	106	122	28	52	79	91	25	48	72	84	
	200	213.15	6	13689	8	0.0015	37	71	106	122	28	53	79	91	25	49	72	84	
	224	234.58	5	13689	7	0.0009	37	64	106	122	28	47	79	91	25	43	72	84	
	250	261.65	5	13689	7	0.0009	37	62	106	122	28	46	79	91	25	43	72	84	
	280	296.89	4	13419	6	0.0009	37	63	106	122	28	47	79	91	25	43	72	84	
	315	336.83	4	13689	5	0.0005	37	59	106	122	28	44	79	91	25	40	72	84	
	355	375.70	3	13689	5	0.0005	37	59	106	122	28	44	79	91	25	40	72	84	
	400	426.30	3	13419	4	0.0005	37	59	106	122	28	44	79	91	25	40	72	84	
	450	471.56	3	12888	3	0.0005	49	92	115	154	37	68	86	114	34	63	79	105	

For tunnel bell housings with an integrated fan, please refer to the calculation method presented on page 25.
Dimensions of motor bell housing are shown in page 272.

E3B / E4B ...20 — MONOBLOCK HOUSING — 60 Hz — 15 kNm

	i_N	i_{eff}	n_2 [rpm]	T_{2N} [Nm]	P_N [kW]	J [Kgm²]	R1 P_{t0} [kW]	R1	R1 H_2O	R1 $+H_2O$	S5 P_{t0} [kW]	S5	S5 H_2O	S5 $+H_2O$	T6 P_{t0} [kW]	T6	T6 H_2O	T6 $+H_2O$	Type
n_1 = 1800 rpm	**12.5**	12.78	141	9491	140	0.0283	61	156	125	220	45	116	93	164	41	107	85	150	
	14	14.61	123	10807	139	0.0256	61	156	125	220	45	116	93	164	41	107	85	150	
	16	15.98	113	11746	139	0.0242	61	156	125	220	45	116	93	164	41	107	85	150	
	18	18.11	99	13062	136	0.0224	61	156	125	220	45	116	93	164	41	107	85	150	
	20	19.92	90	14190	134	0.0213	61	156	125	220	45	116	93	164	41	107	85	150	
	22.4	23.01	78	14236	117	0.0197	61	156	125	220	45	116	93	164	41	107	85	150	
	25	25.56	70	13961	103	0.0147	60	157	125	221	45	117	93	164	41	107	85	151	
	28	28.51	63	13961	92	0.0140	61	157	125	221	46	117	93	164	42	107	85	151	
	31.5	32.35	56	13961	81	0.0131	60	155	124	218	45	115	92	162	41	106	85	149	**E3B** (x3)
	35.5	36.71	49	13961	72	0.0076	52	135	124	189	39	100	92	141	36	92	85	129	
	40	40.94	44	13961	64	0.0072	51	131	124	185	38	97	92	137	35	90	85	126	
	45	46.46	39	13961	57	0.0068	50	129	124	182	37	96	92	135	34	88	85	124	
	50	51.13	35	13961	51	0.0043	43	109	124	173	32	81	92	129	30	75	85	118	
	56	57.03	32	13961	46	0.0042	43	106	124	173	32	79	92	129	29	73	85	118	
	63	64.71	28	13961	41	0.0039	43	105	124	173	32	78	92	129	29	71	85	118	
	71	73.41	25	13689	35	0.0023	43	89	124	173	32	66	92	129	29	61	85	118	
	80	81.88	22	13689	32	0.0022	43	89	124	173	32	66	92	129	29	61	85	118	
	90	92.91	19	13689	28	0.0021	43	89	124	173	32	66	92	129	29	61	85	118	
	100	102.78	18	13152	24	0.0021	43	89	124	173	32	66	92	129	29	61	85	118	
	112	117.29	15	13689	22	0.0032	37	95	100	139	27	71	74	103	25	65	68	95	
	125	130.82	14	13689	20	0.0032	36	93	100	139	27	69	74	103	25	63	68	95	
	140	148.44	12	13689	17	0.0031	37	95	100	139	27	70	74	103	25	65	68	95	
	160	168.42	11	13689	15	0.0016	35	86	100	139	26	64	74	103	24	58	68	95	
	180	187.85	10	13689	14	0.0016	35	84	100	139	26	62	74	103	24	57	68	95	
	200	213.15	8	13689	12	0.0015	35	86	100	139	26	64	74	103	24	58	68	95	**E4B** (x4)
	224	234.58	8	13689	11	0.0009	35	76	100	139	26	57	74	103	24	52	68	95	
	250	261.65	7	13689	10	0.0009	35	75	100	139	26	55	74	103	24	51	68	95	
	280	296.89	6	13419	9	0.0009	35	76	100	139	26	56	74	103	24	52	68	95	
	315	336.83	5	13689	8	0.0005	35	71	100	139	26	53	74	103	24	48	68	95	
	355	375.70	5	13689	7	0.0005	35	71	100	139	26	53	74	103	24	48	68	95	
	400	426.30	4	13419	6	0.0005	35	71	100	139	26	53	74	103	24	48	68	95	
	450	471.56	4	12888	5	0.0005	47	110	109	174	35	82	81	129	32	75	74	119	

For tunnel bell housings with an integrated fan, please refer to the calculation method presented on page 25.
Dimensions of motor bell housing are shown in page 272.

E3B / E4B ...22 — MONOBLOCK HOUSING — 50 Hz — 20 kNm

	i_N	i_{eff}	n_2 [rpm]	T_{2N} [Nm]	P_N [kW]	J [Kgm²]	R1 P_{t0} [kW]	R1	R1 H_2O	R1 +H_2O	S5 P_{t0} [kW]	S5	S5 H_2O	S5 +H_2O	T6 P_{t0} [kW]	T6	T6 H_2O	T6 +H_2O	Type
n_1 = 1000 rpm	**9**	8.76	114	13711	164	0.0807	70	136	147	205	52	101	109	153	48	93	100	140	
	10	10.01	100	15505	162	0.0725	70	136	147	205	52	101	109	153	48	93	100	140	
	11.2	10.94	91	17043	163	0.0680	70	136	147	205	52	101	109	153	48	93	100	140	
	12.5	12.40	81	19221	162	0.0627	70	136	147	205	52	101	109	153	48	93	100	140	
	14	13.65	73	19792	152	0.0594	70	136	147	205	52	101	109	153	48	93	100	140	
	16	15.76	63	19792	132	0.0553	70	136	147	205	52	101	109	153	48	93	100	140	
	18	17.51	57	19413	116	0.0528	66	139	146	208	49	103	108	155	45	95	99	142	
	20	19.53	51	19413	104	0.0514	80	144	150	216	59	107	112	161	54	98	103	148	
	22.4	21.89	46	18709	90	0.0494	63	127	145	191	47	94	108	142	43	87	99	131	**E3B** x3
	25	25.14	40	19413	81	0.0264	64	120	145	181	47	90	108	135	44	82	99	124	
	28	28.04	36	19413	73	0.0258	67	120	145	181	50	89	108	134	46	82	99	123	
	31.5	31.43	32	18837	63	0.0248	60	111	145	167	44	83	108	124	41	76	99	114	
	35.5	35.02	29	19413	58	0.0151	57	100	145	159	42	74	108	118	39	68	99	108	
	40	39.06	26	19413	52	0.0148	57	165	161	248	42	122	119	184	39	112	110	169	
	45	43.78	23	18837	45	0.0143	57	92	145	159	42	68	108	118	39	63	99	108	
	50	50.29	20	19038	40	0.0081	57	80	145	159	42	60	108	118	39	55	99	108	
	56	56.09	18	19038	36	0.0080	57	80	145	159	42	59	108	118	39	54	99	108	
	63	62.86	16	18837	31	0.0077	57	79	145	159	42	59	108	118	39	54	99	108	
	71	69.14	14	19038	29	0.0076	57	79	145	159	42	59	108	118	39	54	99	108	
	80	75.43	13	19038	26	0.0134	46	82	97	127	34	61	72	94	32	56	66	87	
	90	84.13	12	19038	24	0.0133	46	81	97	127	34	60	72	94	31	55	66	87	
	100	94.29	11	18667	21	0.0132	45	76	97	127	34	56	72	94	31	52	66	87	
	112	108.31	9	19038	18	0.0069	45	73	97	127	34	54	72	94	31	50	66	87	
	125	120.80	8	19038	17	0.0069	45	73	97	127	34	54	72	94	31	50	66	87	
	140	135.38	7	18667	14	0.0068	45	68	97	127	34	50	72	94	31	46	66	87	**E4B** x4
	160	150.86	7	19038	13	0.0040	45	64	97	127	34	48	72	94	31	44	66	87	
	180	168.26	6	18667	12	0.0040	45	64	97	127	34	47	72	94	31	44	66	87	
	200	188.57	5	18667	10	0.0040	45	63	97	127	34	47	72	94	31	43	66	87	
	224	216.62	5	18667	9	0.0022	45	63	97	127	34	47	72	94	31	43	66	87	
	250	241.61	4	18667	8	0.0021	45	63	97	127	34	47	72	94	31	43	66	87	
	280	270.77	4	18667	7	0.0021	45	63	97	127	34	47	72	94	31	43	66	87	
	315	297.85	3	18299	6	0.0021	45	63	97	127	34	47	72	94	31	43	66	87	

For tunnel bell housings with an integrated fan, please refer to the calculation method presented on page 25.
Dimensions of motor bell housing are shown in page 272.

E3B / E4B ...22 — MONOBLOCK HOUSING — 50 Hz — 20 kNm

	i_N	i_{eff}	n_2 [rpm]	T_{2N} [Nm]	P_N [kW]	J [Kgm²]	R1 P_{t0} [kW]	R1	R1 H_2O	R1 $+H_2O$	S5 P_{t0} [kW]	S5	S5 H_2O	S5 $+H_2O$	T6 P_{t0} [kW]	T6	T6 H_2O	T6 $+H_2O$	Type
n_1 = 1500 rpm	**9**	8.76	171	13711	246	0.0807	66	182	140	244	49	135	104	182	45	124	96	167	
	10	10.01	150	15505	243	0.0725	66	182	140	244	49	135	104	182	45	124	96	167	
	11.2	10.94	137	17043	245	0.0680	66	182	140	244	49	135	104	182	45	124	96	167	
	12.5	12.40	121	19221	243	0.0627	66	182	140	244	49	135	104	182	45	124	96	167	
	14	13.65	110	19792	228	0.0594	66	182	140	244	49	135	104	182	45	124	96	167	
	16	15.76	95	19792	197	0.0553	66	182	140	244	49	135	104	182	45	124	96	167	
	18	17.51	86	19413	174	0.0528	63	185	139	248	47	137	103	184	43	126	95	169	
	20	19.53	77	19413	156	0.0514	76	192	143	257	56	142	106	191	52	131	98	176	
	22.4	21.89	69	18709	134	0.0494	60	170	138	228	45	126	103	169	41	116	94	155	**E3B**
	25	25.14	60	19413	121	0.0264	61	161	138	216	45	119	103	160	42	110	94	147	
	28	28.04	53	19413	109	0.0258	64	160	138	215	48	119	103	160	44	109	94	147	
	31.5	31.43	48	18837	94	0.0248	57	148	138	199	42	110	103	148	39	101	94	136	
	35.5	35.02	43	19413	87	0.0151	54	133	138	189	40	99	103	140	37	91	94	129	
	40	39.06	38	19413	78	0.0148	54	220	153	295	40	163	114	219	37	150	105	201	
	45	43.78	34	18837	68	0.0143	54	123	138	189	40	91	103	140	37	84	94	129	
	50	50.29	30	19038	59	0.0081	54	107	138	189	40	79	103	140	37	73	94	129	
	56	56.09	27	19038	53	0.0080	54	106	138	189	40	79	103	140	37	72	94	129	
	63	62.86	24	18837	47	0.0077	54	105	138	189	40	78	103	140	37	72	94	129	
	71	69.14	22	19038	43	0.0076	54	105	138	189	40	78	103	140	37	72	94	129	
	80	75.43	20	19038	40	0.0134	44	109	92	151	33	81	68	112	30	74	63	103	
	90	84.13	18	19038	36	0.0133	43	108	92	151	32	80	68	112	30	73	63	103	
	100	94.29	16	18667	31	0.0132	43	101	92	151	32	75	68	112	29	69	63	103	
	112	108.31	14	19038	28	0.0069	43	98	92	151	32	73	68	112	29	67	63	103	
	125	120.80	12	19038	25	0.0069	43	97	92	151	32	72	68	112	29	66	63	103	
	140	135.38	11	18667	22	0.0068	43	90	92	151	32	67	68	112	29	62	63	103	**E4B**
	160	150.86	10	19038	20	0.0040	43	85	92	151	32	63	68	112	29	58	63	103	
	180	168.26	9	18667	17	0.0040	43	85	92	151	32	63	68	112	29	58	63	103	
	200	188.57	8	18667	16	0.0040	43	84	92	151	32	62	68	112	29	57	63	103	
	224	216.62	7	18667	14	0.0022	43	84	92	151	32	62	68	112	29	57	63	103	
	250	241.61	6	18667	12	0.0021	43	84	92	151	32	62	68	112	29	57	63	103	
	280	270.77	6	18667	11	0.0021	43	84	92	151	32	62	68	112	29	57	63	103	
	315	297.85	5	18299	10	0.0021	43	84	92	151	32	62	68	112	29	57	63	103	

For tunnel bell housings with an integrated fan, please refer to the calculation method presented on page 25.
Dimensions of motor bell housing are shown in page 272.

E3B / E4B ...22 — MONOBLOCK HOUSING — 60 Hz — 20 kNm

	i_N	i_{eff}	n_2 [rpm]	T_{2N} [Nm]	P_N [kW]	J [Kgm²]	R1 P_{t0} [kW]	R1	R1 H_2O	R1 $+H_2O$	S5 P_{t0} [kW]	S5	S5 H_2O	S5 $+H_2O$	T6 P_{t0} [kW]	T6	T6 H_2O	T6 $+H_2O$	Type
n_1 = 1200 rpm	**9**	8.76	137	13711	197	0.0807	68	157	144	220	51	116	107	163	47	107	98	150	
	10	10.01	120	15505	195	0.0725	68	157	144	220	51	116	107	163	47	107	98	150	
	11.2	10.94	110	17043	196	0.0680	68	157	144	220	51	116	107	163	47	107	98	150	
	12.5	12.40	97	19221	195	0.0627	68	157	144	220	51	116	107	163	47	107	98	150	
	14	13.65	88	19792	182	0.0594	68	157	144	220	51	116	107	163	47	107	98	150	
	16	15.76	76	19792	158	0.0553	68	157	144	220	51	116	107	163	47	107	98	150	
	18	17.51	69	19413	139	0.0528	65	159	143	223	48	118	106	166	44	108	98	152	
	20	19.53	61	19413	125	0.0514	78	165	147	232	58	123	110	172	53	113	101	158	
	22.4	21.89	55	18709	107	0.0494	62	146	142	205	46	108	106	152	42	100	97	140	**E3B** x3
	25	25.14	48	19413	97	0.0264	63	138	142	194	47	103	106	144	43	94	97	133	
	28	28.04	43	19413	87	0.0258	66	138	142	194	49	102	106	144	45	94	97	132	
	31.5	31.43	38	18837	75	0.0248	59	127	142	179	44	95	106	133	40	87	97	122	
	35.5	35.02	34	19413	70	0.0151	56	114	142	170	41	85	106	126	38	78	97	116	
	40	39.06	31	19413	62	0.0148	56	189	158	265	41	140	117	197	38	129	108	181	
	45	43.78	27	18837	54	0.0143	56	106	142	170	41	78	106	126	38	72	97	116	
	50	50.29	24	19038	48	0.0081	56	92	142	170	41	68	106	126	38	63	97	116	
	56	56.09	21	19038	43	0.0080	56	91	142	170	41	68	106	126	38	62	97	116	
	63	62.86	19	18837	38	0.0077	56	90	142	170	41	67	106	126	38	62	97	116	
	71	69.14	17	19038	35	0.0076	56	90	142	170	41	67	106	126	38	62	97	116	
	80	75.43	16	19038	32	0.0134	45	94	95	136	34	70	70	101	31	64	65	93	
	90	84.13	14	19038	28	0.0133	45	92	95	136	33	69	70	101	31	63	65	93	
	100	94.29	13	18667	25	0.0132	44	87	95	136	33	65	70	101	30	59	65	93	
	112	108.31	11	19038	22	0.0069	44	84	95	136	33	62	70	101	30	57	65	93	
	125	120.80	10	19038	20	0.0069	44	83	95	136	33	62	70	101	30	57	65	93	
	140	135.38	9	18667	17	0.0068	44	78	95	136	33	58	70	101	30	53	65	93	**E4B** x4
	160	150.86	8	19038	16	0.0040	44	73	95	136	33	55	70	101	30	50	65	93	
	180	168.26	7	18667	14	0.0040	44	73	95	136	33	54	70	101	30	50	65	93	
	200	188.57	6	18667	12	0.0040	44	72	95	136	33	54	70	101	30	49	65	93	
	224	216.62	6	18667	11	0.0022	44	72	95	136	33	54	70	101	30	49	65	93	
	250	241.61	5	18667	10	0.0021	44	72	95	136	33	54	70	101	30	49	65	93	
	280	270.77	4	18667	9	0.0021	44	72	95	136	33	54	70	101	30	49	65	93	
	315	297.85	4	18299	8	0.0021	44	72	95	136	33	54	70	101	30	49	65	93	

For tunnel bell housings with an integrated fan, please refer to the calculation method presented on page 25.
Dimensions of motor bell housing are shown in page 272.

E3B / E4B ...22 — MONOBLOCK HOUSING — 60 Hz — 20 kNm

	i_N	i_{eff}	n_2 [rpm]	T_{2N} [Nm]	P_N [kW]	J [Kgm²]	R1 P_{t0} [kW]	R1	R1 H_2O	R1 $+H_2O$	S5 P_{t0} [kW]	S5	S5 H_2O	S5 $+H_2O$	T6 P_{t0} [kW]	T6	T6 H_2O	T6 $+H_2O$	Type
n_1 = 1800 rpm	**9**	8.76	206	13711	295	0.0807	64	187	136	249	48	139	101	185	44	128	93	170	
	10	10.01	180	15505	292	0.0725	64	187	136	249	48	139	101	185	44	128	93	170	
	11.2	10.94	164	17043	294	0.0680	64	187	136	249	48	139	101	185	44	128	93	170	
	12.5	12.40	145	19221	292	0.0627	64	187	136	249	48	139	101	185	44	128	93	170	
	14	13.65	132	19792	273	0.0594	64	187	136	249	48	139	101	185	44	128	93	170	
	16	15.76	114	19792	237	0.0553	64	187	136	249	48	139	101	185	44	128	93	170	
	18	17.51	103	19413	209	0.0528	61	190	134	253	45	141	100	188	42	130	92	173	
	20	19.53	92	19413	187	0.0514	74	198	139	263	55	147	103	195	50	135	95	179	
	22.4	21.89	82	18709	161	0.0494	58	175	134	232	43	130	99	172	40	119	91	159	**E3B** (x3)
	25	25.14	72	19413	146	0.0264	59	165	134	220	44	123	99	163	40	113	91	150	
	28	28.04	64	19413	131	0.0258	62	165	134	219	46	123	99	163	43	113	91	150	
	31.5	31.43	57	18837	113	0.0248	55	153	134	203	41	113	99	151	38	104	91	139	
	35.5	35.02	51	19413	104	0.0151	52	137	134	193	39	102	99	143	36	93	91	132	
	40	39.06	46	19413	94	0.0148	52	226	148	301	39	168	110	223	36	154	101	205	
	45	43.78	41	18837	81	0.0143	52	126	134	193	39	94	99	143	36	86	91	132	
	50	50.29	36	19038	71	0.0081	52	110	134	193	39	82	99	143	36	75	91	132	
	56	56.09	32	19038	64	0.0080	52	109	134	193	39	81	99	143	36	75	91	132	
	63	62.86	29	18837	56	0.0077	52	108	134	193	39	80	99	143	36	74	91	132	
	71	69.14	26	19038	52	0.0076	52	108	134	193	39	80	99	143	36	74	91	132	
	80	75.43	24	19038	48	0.0134	43	112	89	154	32	83	66	115	29	77	61	105	
	90	84.13	21	19038	43	0.0133	42	111	89	154	31	82	66	115	29	76	61	105	
	100	94.29	19	18667	37	0.0132	42	104	89	154	31	77	66	115	28	71	61	105	
	112	108.31	17	19038	33	0.0069	42	101	89	154	31	75	66	115	28	69	61	105	
	125	120.80	15	19038	30	0.0069	42	100	89	154	31	74	66	115	28	68	61	105	
	140	135.38	13	18667	26	0.0068	42	93	89	154	31	69	66	115	28	64	61	105	**E4B** (x4)
	160	150.86	12	19038	24	0.0040	42	88	89	154	31	65	66	115	28	60	61	105	
	180	168.26	11	18667	21	0.0040	42	87	89	154	31	65	66	115	28	60	61	105	
	200	188.57	10	18667	19	0.0040	42	87	89	154	31	64	66	115	28	59	61	105	
	224	216.62	8	18667	16	0.0022	42	87	89	154	31	64	66	115	28	59	61	105	
	250	241.61	7	18667	15	0.0021	42	87	89	154	31	64	66	115	28	59	61	105	
	280	270.77	7	18667	13	0.0021	42	87	89	154	31	64	66	115	28	59	61	105	
	315	297.85	6	18299	12	0.0021	42	87	89	154	31	64	66	115	28	59	61	105	

For tunnel bell housings with an integrated fan, please refer to the calculation method presented on page 25.
Dimensions of motor bell housing are shown in page 272.

E3B / E4B ...25 — MONOBLOCK HOUSING — 50 Hz — 30 kNm

	i_N	i_{eff}	n_2 [rpm]	T_{2N} [Nm]	P_N [kW]	J [Kgm²]	R1 P_{t0} [kW]	R1	R1 H_2O	R1 $+H_2O$	S5 P_{t0} [kW]	S5	S5 H_2O	S5 $+H_2O$	T6 P_{t0} [kW]	T6	T6 H_2O	T6 $+H_2O$	Type
n_1 = 1000 rpm	**11.2**	11.94	84	18688	164	0.0892	90	171	237	295	67	127	176	219	62	116	162	202	
	12.5	13.64	73	21179	163	0.0790	90	171	237	295	67	127	176	219	62	116	162	202	
	14	14.92	67	23137	162	0.0735	90	171	237	295	67	127	176	219	62	116	162	202	
	16	16.91	59	26163	162	0.0670	90	171	237	295	67	127	176	219	62	116	162	202	
	18	18.61	54	28832	162	0.0629	90	171	237	295	67	127	176	219	62	116	162	202	
	20	21.49	47	29098	142	0.0579	90	171	237	295	67	127	176	219	62	116	162	202	
	22.4	23.88	42	29098	128	0.0549	87	174	236	302	64	130	176	224	59	119	161	206	
	25	26.63	38	28556	112	0.0531	100	178	237	309	75	133	176	230	69	122	162	211	
	28	29.85	34	25451	89	0.0507	83	159	236	275	62	118	176	204	57	108	161	188	**E3B** x3
	31.5	34.29	29	28556	87	0.0275	82	151	236	262	61	112	176	194	56	103	161	179	
	35.5	38.24	26	28020	77	0.0266	82	149	236	257	61	110	176	191	56	102	161	176	
	40	42.86	23	25629	63	0.0255	74	138	236	242	55	103	176	180	51	94	161	165	
	45	47.76	21	28556	63	0.0157	69	124	236	240	51	93	176	178	47	85	161	164	
	50	53.27	19	27489	54	0.0152	69	121	236	240	51	90	176	178	47	83	161	164	
	56	59.69	17	25629	45	0.0146	68	115	236	240	51	85	176	178	47	78	161	164	
	63	68.57	15	28556	44	0.0084	68	99	236	240	51	74	176	178	47	68	161	164	
	71	76.48	13	27489	38	0.0082	68	97	236	240	51	72	176	178	47	66	161	164	
	80	85.71	12	25629	31	0.0079	68	95	236	240	51	70	176	178	47	65	161	164	
	90	94.29	11	25926	29	0.0078	68	95	236	240	51	70	176	178	47	65	161	164	
	100	102.86	10	28020	29	0.0135	57	102	189	192	42	76	140	143	39	70	129	131	
	112	114.73	9	27489	25	0.0134	56	100	189	192	41	75	140	143	38	69	129	131	
	125	128.57	8	25415	21	0.0133	55	94	189	192	41	70	140	143	37	65	129	131	
	140	147.69	7	28020	20	0.0070	55	92	189	192	41	68	140	143	37	63	129	131	
	160	164.73	6	26963	17	0.0069	55	90	189	192	41	67	140	143	37	61	129	131	
	180	184.62	5	25415	14	0.0069	55	84	189	192	41	62	140	143	37	57	129	131	**E4B** x4
	200	205.71	5	28020	14	0.0040	55	80	189	192	41	60	140	143	37	55	129	131	
	224	229.45	4	26963	12	0.0040	55	79	189	192	41	58	140	143	37	54	129	131	
	250	257.14	4	25415	10	0.0040	55	76	189	192	41	56	140	143	37	52	129	131	
	280	295.38	3	28020	10	0.0022	55	76	189	192	41	56	140	143	37	52	129	131	
	315	329.47	3	26963	9	0.0022	55	76	189	192	41	56	140	143	37	52	129	131	
	355	369.23	3	25415	7	0.0021	55	76	189	192	41	56	140	143	37	52	129	131	
	400	406.15	2	25415	7	0.0021	55	76	189	192	41	56	140	143	37	52	129	131	

For tunnel bell housings with an integrated fan, please refer to the calculation method presented on page 25.
Dimensions of motor bell housing are shown in page 272.

E3B / E4B ...25 — MONOBLOCK HOUSING — 50 Hz — 30 kNm

n_1 = 1500 rpm

i_N	i_{eff}	n_2 [rpm]	T_{2N} [Nm]	P_N [kW]	J [Kgm²]	R1 P_{t0} [kW]	R1	R1 H_2O	R1 $+H_2O$	S5 P_{t0} [kW]	S5	S5 H_2O	S5 $+H_2O$	T6 P_{t0} [kW]	T6	T6 H_2O	T6 $+H_2O$	Type
11.2	11.94	126	18688	246	0.0892	86	227	225	352	64	169	167	261	59	155	154	240	E3B (x3)
12.5	13.64	110	21179	244	0.0790	86	227	225	352	64	169	167	261	59	155	154	240	
14	14.92	101	23137	244	0.0735	86	227	225	352	64	169	167	261	59	155	154	240	
16	16.91	89	26163	243	0.0670	86	227	225	352	64	169	167	261	59	155	154	240	
18	18.61	81	28832	243	0.0629	86	227	225	352	64	169	167	261	59	155	154	240	
20	21.49	70	29098	213	0.0579	86	227	225	352	64	169	167	261	59	155	154	240	
22.4	23.88	63	29098	191	0.0549	83	233	225	360	61	173	167	267	56	159	154	246	
25	26.63	56	28556	168	0.0531	96	238	226	368	71	177	168	273	65	162	154	251	
28	29.85	50	25451	134	0.0507	79	212	225	327	59	157	167	243	54	145	154	224	
31.5	34.29	44	28556	131	0.0275	78	201	225	311	58	150	167	231	53	138	154	213	
35.5	38.24	39	28020	115	0.0266	79	198	225	307	58	147	167	228	54	135	154	209	
40	42.86	35	25629	94	0.0255	71	184	225	288	53	137	167	214	48	126	154	197	
45	47.76	31	28556	94	0.0157	66	166	225	286	49	123	167	212	45	113	154	195	
50	53.27	28	27489	81	0.0152	65	162	225	286	48	120	167	212	45	110	154	195	
56	59.69	25	25629	67	0.0146	65	153	225	286	48	114	167	212	44	104	154	195	
63	68.57	22	28556	65	0.0084	65	133	225	286	48	99	167	212	44	91	154	195	
71	76.48	20	27489	56	0.0082	65	129	225	286	48	96	167	212	44	88	154	195	
80	85.71	18	25629	47	0.0079	65	126	225	286	48	94	167	212	44	86	154	195	
90	94.29	16	25926	43	0.0078	65	126	225	286	48	94	167	212	44	86	154	195	
100	102.86	15	28020	43	0.0135	54	136	180	229	40	101	134	170	37	93	123	156	E4B (x4)
112	114.73	13	27489	38	0.0134	53	134	180	229	39	99	134	170	36	91	123	156	
125	128.57	12	25415	31	0.0133	52	126	180	229	39	94	134	170	36	86	123	156	
140	147.69	10	28020	30	0.0070	52	122	180	229	39	91	134	170	36	83	123	156	
160	164.73	9	26963	26	0.0069	52	120	180	229	39	89	134	170	36	82	123	156	
180	184.62	8	25415	22	0.0069	52	112	180	229	39	83	134	170	36	76	123	156	
200	205.71	7	28020	21	0.0040	52	107	180	229	39	79	134	170	36	73	123	156	
224	229.45	7	26963	18	0.0040	52	105	180	229	39	78	134	170	36	72	123	156	
250	257.14	6	25415	16	0.0040	52	101	180	229	39	75	134	170	36	69	123	156	
280	295.38	5	28020	15	0.0022	52	101	180	229	39	75	134	170	36	69	123	156	
315	329.47	5	26963	13	0.0022	52	101	180	229	39	75	134	170	36	69	123	156	
355	369.23	4	25415	11	0.0021	52	101	180	229	39	75	134	170	36	69	123	156	
400	406.15	4	25415	10	0.0021	52	101	180	229	39	75	134	170	36	69	123	156	

For tunnel bell housings with an integrated fan, please refer to the calculation method presented on page 25.
Dimensions of motor bell housing are shown in page 272.

E3B / E4B ...25 — MONOBLOCK HOUSING — 60 Hz — 30 kNm

	i_N	i_{eff}	n_2 [rpm]	T_{2N} [Nm]	P_N [kW]	J [Kgm²]	R1 P_{t0} [kW]	R1	R1 H_2O	R1 $+H_2O$	S5 P_{t0} [kW]	S5	S5 H_2O	S5 $+H_2O$	T6 P_{t0} [kW]	T6	T6 H_2O	T6 $+H_2O$	Type
n_1 = 1200 rpm	**11.2**	11.94	101	18688	197	0.0892	88	196	232	316	66	145	172	235	60	134	159	216	
	12.5	13.64	88	21179	195	0.0790	88	196	232	316	66	145	172	235	60	134	159	216	
	14	14.92	80	23137	195	0.0735	88	196	232	316	66	145	172	235	60	134	159	216	
	16	16.91	71	26163	194	0.0670	88	196	232	316	66	145	172	235	60	134	159	216	
	18	18.61	64	28832	195	0.0629	88	196	232	316	66	145	172	235	60	134	159	216	
	20	21.49	56	29098	170	0.0579	88	196	232	316	66	145	172	235	60	134	159	216	
	22.4	23.88	50	29098	153	0.0549	85	200	232	324	63	149	172	240	58	137	158	221	
	25	26.63	45	28556	135	0.0531	99	205	233	331	73	152	173	246	67	140	159	226	
	28	29.85	40	25451	107	0.0507	82	182	232	295	61	135	172	219	56	124	158	201	**E3B** (x3)
	31.5	34.29	35	28556	105	0.0275	81	173	232	280	60	129	172	208	55	118	158	191	
	35.5	38.24	31	28020	92	0.0266	81	170	232	276	60	127	172	205	55	116	158	188	
	40	42.86	28	25629	75	0.0255	73	158	232	259	54	118	172	193	50	108	158	177	
	45	47.76	25	28556	75	0.0157	68	143	232	257	50	106	172	191	46	98	158	176	
	50	53.27	23	27489	65	0.0152	67	139	232	257	50	103	172	191	46	95	158	176	
	56	59.69	20	25629	54	0.0146	67	131	232	257	50	98	172	191	46	90	158	176	
	63	68.57	18	28556	52	0.0084	67	114	232	257	50	85	172	191	46	78	158	176	
	71	76.48	16	27489	45	0.0082	67	111	232	257	50	83	172	191	46	76	158	176	
	80	85.71	14	25629	38	0.0079	67	108	232	257	50	81	172	191	46	74	158	176	
	90	94.29	13	25926	35	0.0078	67	108	232	257	50	81	172	191	46	74	158	176	
	100	102.86	12	28020	34	0.0135	56	117	185	206	41	87	138	153	38	80	127	141	
	112	114.73	10	27489	30	0.0134	55	115	185	206	41	85	138	153	37	79	127	141	
	125	128.57	9	25415	25	0.0133	54	108	185	206	40	80	138	153	37	74	127	141	
	140	147.69	8	28020	24	0.0070	54	105	185	206	40	78	138	153	37	72	127	141	
	160	164.73	7	26963	21	0.0069	54	103	185	206	40	77	138	153	37	70	127	141	
	180	184.62	6	25415	17	0.0069	54	96	185	206	40	71	138	153	37	66	127	141	**E4B** (x4)
	200	205.71	6	28020	17	0.0040	54	92	185	206	40	68	138	153	37	63	127	141	
	224	229.45	5	26963	15	0.0040	54	90	185	206	40	67	138	153	37	62	127	141	
	250	257.14	5	25415	12	0.0040	54	87	185	206	40	64	138	153	37	59	127	141	
	280	295.38	4	28020	12	0.0022	54	87	185	206	40	64	138	153	37	59	127	141	
	315	329.47	4	26963	10	0.0022	54	87	185	206	40	64	138	153	37	59	127	141	
	355	369.23	3	25415	9	0.0021	54	87	185	206	40	64	138	153	37	59	127	141	
	400	406.15	3	25415	8	0.0021	54	87	185	206	40	64	138	153	37	59	127	141	

For tunnel bell housings with an integrated fan, please refer to the calculation method presented on page 25.
Dimensions of motor bell housing are shown in page 272.

E3B / E4B ...25 — MONOBLOCK HOUSING — 60 Hz — 30 kNm

n_1 = 1800 rpm

i_N	i_{eff}	n_2 [rpm]	T_{2N} [Nm]	P_N [kW]	J [Kgm²]	R1 P_{t0} [kW]	R1	R1 H_2O	R1 $+H_2O$	S5 P_{t0} [kW]	S5	S5 H_2O	S5 $+H_2O$	T6 P_{t0} [kW]	T6	T6 H_2O	T6 $+H_2O$	Type
11.2	11.94	151	18688	295	0.0892	83	234	219	359	62	174	162	266	57	160	149	245	
12.5	13.64	132	21179	293	0.0790	83	234	219	359	62	174	162	266	57	160	149	245	
14	14.92	121	23137	292	0.0735	83	234	219	359	62	174	162	266	57	160	149	245	
16	16.91	106	26163	292	0.0670	83	234	219	359	62	174	162	266	57	160	149	245	
18	18.61	97	28832	292	0.0629	83	234	219	359	62	174	162	266	57	160	149	245	
20	21.49	84	29098	255	0.0579	83	234	219	359	62	174	162	266	57	160	149	245	
22.4	23.88	75	29098	230	0.0549	80	240	218	367	60	178	162	273	55	164	149	251	
25	26.63	68	28556	202	0.0531	93	245	219	375	69	182	163	279	63	167	150	256	
28	29.85	60	25451	161	0.0507	77	218	218	334	57	162	162	248	53	149	149	228	**E3B** (x3)
31.5	34.29	52	28556	157	0.0275	76	207	218	318	56	154	162	236	52	142	149	217	
35.5	38.24	47	28020	138	0.0266	76	204	218	313	57	152	162	232	52	139	149	214	
40	42.86	42	25629	113	0.0255	69	190	218	294	51	141	162	218	47	130	149	201	
45	47.76	38	28556	113	0.0157	64	171	218	292	47	127	162	217	44	117	149	199	
50	53.27	34	27489	97	0.0152	63	167	218	292	47	124	162	217	43	114	149	199	
56	59.69	30	25629	81	0.0146	63	157	218	292	47	117	162	217	43	108	149	199	
63	68.57	26	28556	78	0.0084	63	137	218	292	47	101	162	217	43	93	149	199	
71	76.48	24	27489	68	0.0082	63	133	218	292	47	99	162	217	43	91	149	199	
80	85.71	21	25629	56	0.0079	63	130	218	292	47	96	162	217	43	89	149	199	
90	94.29	19	25926	52	0.0078	63	130	218	292	47	96	162	217	43	89	149	199	
100	102.86	17	28020	51	0.0135	52	141	175	233	39	104	130	173	36	96	119	159	
112	114.73	16	27489	45	0.0134	51	138	175	233	38	102	130	173	35	94	119	159	
125	128.57	14	25415	37	0.0133	50	130	175	233	37	96	130	173	34	89	119	159	
140	147.69	12	28020	36	0.0070	50	126	175	233	37	94	130	173	34	86	119	159	
160	164.73	11	26963	31	0.0069	50	123	175	233	37	92	130	173	34	84	119	159	
180	184.62	10	25415	26	0.0069	50	115	175	233	37	86	130	173	34	79	119	159	**E4B** (x4)
200	205.71	9	28020	26	0.0040	50	110	175	233	37	82	130	173	34	75	119	159	
224	229.45	8	26963	22	0.0040	50	108	175	233	37	80	130	173	34	74	119	159	
250	257.14	7	25415	19	0.0040	50	104	175	233	37	77	130	173	34	71	119	159	
280	295.38	6	28020	18	0.0022	50	104	175	233	37	77	130	173	34	71	119	159	
315	329.47	5	26963	15	0.0022	50	104	175	233	37	77	130	173	34	71	119	159	
355	369.23	5	25415	13	0.0021	50	104	175	233	37	77	130	173	34	71	119	159	
400	406.15	4	25415	12	0.0021	50	104	175	233	37	77	130	173	34	71	119	159	

For tunnel bell housings with an integrated fan, please refer to the calculation method presented on page 25.
Dimensions of motor bell housing are shown in page 272.

E3B / E4B ...26 — MONOBLOCK HOUSING — 50 Hz — 36 kNm

	i_N	i_{eff}	n_2 [rpm]	T_{2N} [Nm]	P_N [kW]	J [Kgm²]	R1 P_{t0} [kW]	R1	R1 H_2O	R1 $+H_2O$	S5 P_{t0} [kW]	S5	S5 H_2O	S5 $+H_2O$	T6 P_{t0} [kW]	T6	T6 H_2O	T6 $+H_2O$	Type
n_1 = 1000 rpm	**9**	8.91	112	24155	284	0.2176	96	212	213	318	71	157	159	236	66	145	146	217	
	10	10.19	98	27458	282	0.1886	96	212	213	318	71	157	159	236	66	145	146	217	
	11.2	11.14	90	30142	283	0.1727	96	212	213	318	71	157	159	236	66	145	146	217	
	12.5	12.63	79	33125	275	0.1547	96	212	213	318	71	157	159	236	66	145	146	217	
	14	13.90	72	33125	250	0.1433	96	212	213	318	71	157	159	236	66	145	146	217	
	16	16.05	62	33125	216	0.1298	96	212	213	318	71	157	159	236	66	145	146	217	
	18	17.83	56	36008	211	0.1217	102	223	225	335	76	166	167	249	70	152	153	229	
	20	19.89	50	36324	191	0.1176	96	209	210	313	71	155	156	233	65	143	143	214	
	22.4	22.60	44	36324	168	0.1105	91	203	206	305	68	151	153	227	62	139	141	208	**E3B** (x3)
	25	25.60	39	35672	146	0.0659	95	195	205	292	71	145	152	217	65	133	140	200	
	28	28.55	35	35672	131	0.0639	89	183	205	274	66	136	152	204	61	125	140	187	
	31.5	32.46	31	35672	115	0.0605	89	178	205	268	66	133	152	199	61	122	140	183	
	35.5	35.66	28	35672	105	0.0380	83	162	205	243	62	120	152	181	57	111	140	166	
	40	39.77	25	35672	94	0.0370	83	153	205	229	62	114	152	170	57	104	140	157	
	45	45.21	22	35672	83	0.0352	81	149	205	227	60	111	152	168	55	102	140	155	
	50	51.20	20	35672	73	0.0204	81	131	205	224	60	97	152	167	55	89	140	153	
	56	57.11	18	35027	64	0.0199	81	124	205	224	60	92	152	167	55	85	140	153	
	63	64.91	15	35027	57	0.0190	81	121	205	224	60	90	152	167	55	82	140	153	
	71	72.86	14	35027	50	0.0187	81	114	205	224	60	85	152	167	55	78	140	153	
	80	80.82	12	35027	45	0.0164	73	134	164	201	54	100	122	150	50	92	112	138	
	90	90.15	11	35027	41	0.0162	69	127	164	191	52	94	122	142	47	87	112	130	
	100	102.47	10	35027	36	0.0159	68	124	164	187	50	92	122	139	46	85	112	128	
	112	116.05	9	35027	32	0.0084	67	122	164	183	50	91	122	136	46	83	112	125	
	125	129.44	8	35027	28	0.0083	64	116	164	179	48	86	122	133	44	79	112	123	
	140	147.14	7	35027	25	0.0081	64	113	164	179	48	84	122	133	44	77	112	123	**E4B** (x4)
	160	161.65	6	35027	23	0.0048	64	109	164	179	48	81	122	133	44	74	112	123	
	180	180.30	6	35027	20	0.0047	64	103	164	179	48	77	122	133	44	70	112	123	
	200	204.94	5	35027	18	0.0046	64	101	164	179	48	75	122	133	44	69	112	123	
	224	232.11	4	34387	16	0.0025	64	95	164	179	48	71	122	133	44	65	112	123	
	250	258.89	4	34387	14	0.0025	64	91	164	179	48	67	122	133	44	62	112	123	
	280	294.28	3	34387	12	0.0025	64	89	164	179	48	66	122	133	44	61	112	123	
	315	330.31	3	34387	11	0.0024	64	89	164	179	48	66	122	133	44	61	112	123	

For tunnel bell housings with an integrated fan, please refer to the calculation method presented on page 25.
Dimensions of motor bell housing are shown in page 272.

E3B / E4B ...26 — MONOBLOCK HOUSING — 50 Hz — 36 kNm

	i_N	i_{eff}	n_2 [rpm]	T_{2N} [Nm]	P_N [kW]	J [Kgm²]	R1 P_{t0} [kW]	R1	R1 H_2O	R1 $+H_2O$	S5 P_{t0} [kW]	S5	S5 H_2O	S5 $+H_2O$	T6 P_{t0} [kW]	T6	T6 H_2O	T6 $+H_2O$	Type
n_1 = 1500 rpm	**9**	8.91	168	24155	426	0.2176	92	282	203	378	68	210	151	281	63	193	139	258	
	10	10.19	147	27458	423	0.1886	92	282	203	378	68	210	151	281	63	193	139	258	
	11.2	11.14	135	30142	425	0.1727	92	282	203	378	68	210	151	281	63	193	139	258	
	12.5	12.63	119	33125	412	0.1547	92	282	203	378	68	210	151	281	63	193	139	258	
	14	13.90	108	33125	374	0.1433	92	282	203	378	68	210	151	281	63	193	139	258	
	16	16.05	93	33125	324	0.1298	92	282	203	378	68	210	151	281	63	193	139	258	
	18	17.83	84	36008	317	0.1217	97	297	214	399	72	221	159	297	66	203	146	273	
	20	19.89	75	36324	287	0.1176	91	278	200	373	68	207	148	277	62	190	137	255	
	22.4	22.60	66	36324	252	0.1105	87	271	196	363	64	201	146	270	59	185	134	248	**E3B** (x3)
	25	25.60	59	35672	219	0.0659	91	260	195	348	67	193	145	259	62	177	133	238	
	28	28.55	53	35672	196	0.0639	85	244	195	326	63	181	145	243	58	166	133	223	
	31.5	32.46	46	35672	173	0.0605	84	238	195	319	63	177	145	237	58	163	133	218	
	35.5	35.66	42	35672	157	0.0380	79	216	195	290	59	161	145	215	54	148	133	198	
	40	39.77	38	35672	141	0.0370	79	204	195	273	59	151	145	203	54	139	133	187	
	45	45.21	33	35672	124	0.0352	77	199	195	270	57	148	145	201	53	136	133	184	
	50	51.20	29	35672	109	0.0204	77	174	195	267	57	130	145	198	53	119	133	182	
	56	57.11	26	35027	96	0.0199	77	165	195	267	57	123	145	198	53	113	133	182	
	63	64.91	23	35027	85	0.0190	77	161	195	267	57	120	145	198	53	110	133	182	
	71	72.86	21	35027	76	0.0187	77	152	195	267	57	113	145	198	53	104	133	182	
	80	80.82	19	35027	68	0.0164	70	179	156	240	52	133	116	178	48	122	107	164	
	90	90.15	17	35027	61	0.0162	66	169	156	227	49	126	116	169	45	116	107	155	
	100	102.47	15	35027	54	0.0159	65	166	156	222	48	123	116	165	44	113	107	152	
	112	116.05	13	35027	47	0.0084	63	163	156	218	47	121	116	162	43	111	107	149	
	125	129.44	12	35027	43	0.0083	61	154	156	214	45	115	116	159	42	105	107	146	
	140	147.14	10	35027	37	0.0081	61	151	156	214	45	112	116	159	42	103	107	146	**E4B** (x4)
	160	161.65	9	35027	34	0.0048	61	145	156	214	45	108	116	159	42	99	107	146	
	180	180.30	8	35027	31	0.0047	61	137	156	214	45	102	116	159	42	94	107	146	
	200	204.94	7	35027	27	0.0046	61	134	156	214	45	100	116	159	42	92	107	146	
	224	232.11	6	34387	23	0.0025	61	127	156	214	45	94	116	159	42	87	107	146	
	250	258.89	6	34387	21	0.0025	61	121	156	214	45	90	116	159	42	82	107	146	
	280	294.28	5	34387	18	0.0025	61	119	156	214	45	89	116	159	42	81	107	146	
	315	330.31	5	34387	16	0.0024	61	119	156	214	45	89	116	159	42	81	107	146	

For tunnel bell housings with an integrated fan, please refer to the calculation method presented on page 25.
Dimensions of motor bell housing are shown in page 272.

E3B / E4B ...26 — MONOBLOCK HOUSING — 60 Hz — 36 kNm

	i_N	i_{eff}	n_2 [rpm]	T_{2N} [Nm]	P_N [kW]	J [Kgm²]	R1 P_{t0} [kW]	R1	R1 H_2O	R1 +H_2O	S5 P_{t0} [kW]	S5	S5 H_2O	S5 +H_2O	T6 P_{t0} [kW]	T6	T6 H_2O	T6 +H_2O	Type
n_1 = 1200 rpm	**9**	8.91	135	24155	341	0.2176	94	243	209	341	70	180	156	253	64	166	143	233	
	10	10.19	118	27458	339	0.1886	94	243	209	341	70	180	156	253	64	166	143	233	
	11.2	11.14	108	30142	340	0.1727	94	243	209	341	70	180	156	253	64	166	143	233	
	12.5	12.63	95	33125	330	0.1547	94	243	209	341	70	180	156	253	64	166	143	233	
	14	13.90	86	33125	300	0.1433	94	243	209	341	70	180	156	253	64	166	143	233	
	16	16.05	75	33125	259	0.1298	94	243	209	341	70	180	156	253	64	166	143	233	
	18	17.83	67	36008	254	0.1217	100	256	220	359	74	190	164	267	68	175	150	245	
	20	19.89	60	36324	229	0.1176	94	239	206	336	70	178	153	249	64	163	141	229	
	22.4	22.60	53	36324	202	0.1105	89	233	202	327	66	173	150	243	61	159	138	223	**E3B**
	25	25.60	47	35672	175	0.0659	93	223	201	313	69	166	149	233	64	153	137	214	x3
	28	28.55	42	35672	157	0.0639	88	210	201	294	65	156	149	218	60	143	137	201	
	31.5	32.46	37	35672	138	0.0605	87	205	201	287	65	152	149	213	59	140	137	196	
	35.5	35.66	34	35672	126	0.0380	82	186	201	261	61	138	149	194	56	127	137	178	
	40	39.77	30	35672	113	0.0370	81	175	201	246	60	130	149	183	55	120	137	168	
	45	45.21	27	35672	99	0.0352	79	171	201	243	59	127	149	181	54	117	137	166	
	50	51.20	23	35672	88	0.0204	79	150	201	240	59	111	149	179	54	102	137	164	
	56	57.11	21	35027	77	0.0199	79	142	201	240	59	106	149	179	54	97	137	164	
	63	64.91	18	35027	68	0.0190	79	138	201	240	59	103	149	179	54	95	137	164	
	71	72.86	16	35027	60	0.0187	79	131	201	240	59	97	149	179	54	89	137	164	
	80	80.82	15	35027	54	0.0164	72	154	161	216	53	114	119	160	49	105	110	147	
	90	90.15	13	35027	49	0.0162	68	146	161	204	51	108	119	152	46	99	110	139	
	100	102.47	12	35027	43	0.0159	67	143	161	200	50	106	119	149	46	97	110	137	
	112	116.05	10	35027	38	0.0084	65	140	161	196	49	104	119	146	45	96	110	134	
	125	129.44	9	35027	34	0.0083	63	133	161	192	47	99	119	143	43	91	110	131	
	140	147.14	8	35027	30	0.0081	63	130	161	192	47	97	119	143	43	89	110	131	**E4B**
	160	161.65	7	35027	27	0.0048	63	125	161	192	47	93	119	143	43	85	110	131	x4
	180	180.30	7	35027	24	0.0047	63	118	161	192	47	88	119	143	43	81	110	131	
	200	204.94	6	35027	21	0.0046	63	115	161	192	47	86	119	143	43	79	110	131	
	224	232.11	5	34387	19	0.0025	63	109	161	192	47	81	119	143	43	74	110	131	
	250	258.89	5	34387	17	0.0025	63	104	161	192	47	77	119	143	43	71	110	131	
	280	294.28	4	34387	15	0.0025	63	103	161	192	47	76	119	143	43	70	110	131	
	315	330.31	4	34387	13	0.0024	63	103	161	192	47	76	119	143	43	70	110	131	

For tunnel bell housings with an integrated fan, please refer to the calculation method presented on page 25.
Dimensions of motor bell housing are shown in page 272.

E3B / E4B ...26 — MONOBLOCK HOUSING — 60 Hz — 36 kNm

	i_N	i_{eff}	n_2 [rpm]	T_{2N} [Nm]	P_N [kW]	J [Kgm²]	R1 P_{t0} [kW]	R1	R1 H_2O	R1 $+H_2O$	S5 P_{t0} [kW]	S5	S5 H_2O	S5 $+H_2O$	T6 P_{t0} [kW]	T6	T6 H_2O	T6 $+H_2O$	Type
n_1 = 1800 rpm	**9**	8.91	202	24155	511	0.2176	89	291	197	386	66	216	147	287	61	198	135	264	
	10	10.19	177	27458	508	0.1886	89	291	197	386	66	216	147	287	61	198	135	264	
	11.2	11.14	162	30142	510	0.1727	89	291	197	386	66	216	147	287	61	198	135	264	
	12.5	12.63	143	33125	494	0.1547	89	291	197	386	66	216	147	287	61	198	135	264	
	14	13.90	130	33125	449	0.1433	89	291	197	386	66	216	147	287	61	198	135	264	
	16	16.05	112	33125	389	0.1298	89	291	197	386	66	216	147	287	61	198	135	264	
	18	17.83	101	36008	381	0.1217	94	306	207	407	70	228	154	303	64	209	142	278	
	20	19.89	90	36324	344	0.1176	88	287	194	380	66	213	144	283	60	196	132	260	
	22.4	22.60	80	36324	303	0.1105	84	279	190	370	62	207	141	275	57	191	130	253	**E3B** (x3)
	25	25.60	70	35672	263	0.0659	88	268	189	355	65	199	141	264	60	183	129	242	
	28	28.55	63	35672	236	0.0639	82	251	189	333	61	186	141	247	56	171	129	227	
	31.5	32.46	55	35672	207	0.0605	82	245	189	325	61	182	141	242	56	167	129	222	
	35.5	35.66	50	35672	189	0.0380	77	223	189	295	57	165	141	219	53	152	129	202	
	40	39.77	45	35672	169	0.0370	77	210	189	279	57	156	141	207	52	143	129	190	
	45	45.21	40	35672	149	0.0352	75	205	189	275	56	152	141	205	51	140	129	188	
	50	51.20	35	35672	131	0.0204	75	180	189	272	55	133	141	202	51	123	129	186	
	56	57.11	32	35027	116	0.0199	75	170	189	272	55	126	141	202	51	116	129	186	
	63	64.91	28	35027	102	0.0190	75	166	189	272	55	123	141	202	51	113	129	186	
	71	72.86	25	35027	91	0.0187	75	157	189	272	55	116	141	202	51	107	129	186	
	80	80.82	22	35027	82	0.0164	68	184	151	245	50	137	112	182	46	126	103	167	
	90	90.15	20	35027	73	0.0162	64	174	151	231	48	130	112	172	44	119	103	158	
	100	102.47	18	35027	64	0.0159	63	171	151	227	47	127	112	168	43	117	103	155	
	112	116.05	16	35027	57	0.0084	62	168	151	223	46	125	112	165	42	115	103	152	
	125	129.44	14	35027	51	0.0083	59	159	151	218	44	118	112	162	40	109	103	149	
	140	147.14	12	35027	45	0.0081	59	156	151	218	44	116	112	162	40	106	103	149	**E4B** (x4)
	160	161.65	11	35027	41	0.0048	59	149	151	218	44	111	112	162	40	102	103	149	
	180	180.30	10	35027	37	0.0047	59	142	151	218	44	105	112	162	40	97	103	149	
	200	204.94	9	35027	32	0.0046	59	138	151	218	44	103	112	162	40	94	103	149	
	224	232.11	8	34387	28	0.0025	59	131	151	218	44	97	112	162	40	89	103	149	
	250	258.89	7	34387	25	0.0025	59	124	151	218	44	92	112	162	40	85	103	149	
	280	294.28	6	34387	22	0.0025	59	123	151	218	44	91	112	162	40	84	103	149	
	315	330.31	5	34387	20	0.0024	59	123	151	218	44	91	112	162	40	84	103	149	

For tunnel bell housings with an integrated fan, please refer to the calculation method presented on page 25.
Dimensions of motor bell housing are shown in page 272.

E3B / E4B ...28 — MONOBLOCK HOUSING — 50 Hz — 39 kNm

	i_N	i_{eff}	n_2 [rpm]	T_{2N} [Nm]	P_N [kW]	J [Kgm²]	R1 P_{t0} [kW]	R1	R1 H_2O	R1 +H_2O	S5 P_{t0} [kW]	S5	S5 H_2O	S5 +H_2O	T6 P_{t0} [kW]	T6	T6 H_2O	T6 +H_2O	Type
n_1 = 1000 rpm	**9**	8.91	112	24118	283	0.2135	96	212	213	318	71	157	159	236	66	145	146	217	
	10	10.19	98	27453	282	0.1855	96	212	213	318	71	157	159	236	66	145	146	217	
	11.2	11.14	90	30242	284	0.1701	96	212	213	318	71	157	159	236	66	145	146	217	
	12.5	12.63	79	34086	283	0.1526	96	212	213	318	71	157	159	236	66	145	146	217	
	14	13.90	72	37203	280	0.1416	96	212	213	318	71	157	159	236	66	145	146	217	
	16	16.05	62	38042	248	0.1285	96	212	213	318	71	157	159	236	66	145	146	217	
	18	17.83	56	36300	213	0.1207	102	223	225	335	76	166	167	249	70	152	153	229	
	20	19.89	50	38076	200	0.1168	96	209	210	313	71	155	156	233	65	143	143	214	
	22.4	22.60	44	36598	170	0.1099	91	203	206	305	68	151	153	227	62	139	141	208	**E3B** x3
	25	25.60	39	38076	156	0.0654	95	195	205	292	71	145	152	217	65	133	140	200	
	28	28.55	35	38076	140	0.0635	89	183	205	274	66	136	152	204	61	125	140	187	
	31.5	32.46	31	36598	118	0.0602	89	178	205	268	66	133	152	199	61	122	140	183	
	35.5	35.66	28	37333	110	0.0378	83	162	205	243	62	120	152	181	57	111	140	166	
	40	39.77	25	37333	98	0.0368	83	153	205	229	62	114	152	170	57	104	140	157	
	45	45.21	22	35869	83	0.0351	81	149	205	227	60	111	152	168	55	102	140	155	
	50	51.20	20	37333	76	0.0203	81	131	205	224	60	97	152	167	55	89	140	153	
	56	57.11	18	37333	68	0.0198	81	124	205	224	60	92	152	167	55	85	140	153	
	63	64.91	15	35869	58	0.0190	81	121	205	224	60	90	152	167	55	82	140	153	
	71	72.86	14	37333	54	0.0187	81	114	205	224	60	85	152	167	55	78	140	153	
	80	80.82	12	37333	48	0.0163	73	134	164	201	54	100	122	150	50	92	112	138	
	90	90.15	11	36598	43	0.0162	69	127	164	191	52	94	122	142	47	87	112	130	
	100	102.47	10	35148	36	0.0158	68	124	164	187	50	92	122	139	46	85	112	128	
	112	116.05	9	36598	33	0.0084	67	122	164	183	50	91	122	136	46	83	112	125	
	125	129.44	8	36598	30	0.0083	64	116	164	179	48	86	122	133	44	79	112	123	
	140	147.14	7	35148	25	0.0081	64	113	164	179	48	84	122	133	44	77	112	123	**E4B** x4
	160	161.65	6	36598	24	0.0047	64	109	164	179	48	81	122	133	44	74	112	123	
	180	180.30	6	36598	21	0.0047	64	103	164	179	48	77	122	133	44	70	112	123	
	200	204.94	5	35148	18	0.0046	64	101	164	179	48	75	122	133	44	69	112	123	
	224	232.11	4	36598	17	0.0025	64	95	164	179	48	71	122	133	44	65	112	123	
	250	258.89	4	36598	15	0.0025	64	91	164	179	48	67	122	133	44	62	112	123	
	280	294.28	3	35148	13	0.0025	64	89	164	179	48	66	122	133	44	61	112	123	
	315	330.31	3	36598	12	0.0024	64	89	164	179	48	66	122	133	44	61	112	123	

For tunnel bell housings with an integrated fan, please refer to the calculation method presented on page 25.
Dimensions of motor bell housing are shown in page 272.

E3B / E4B ...28 — MONOBLOCK HOUSING — 50 Hz — 39 kNm

	i_N	i_{eff}	n_2 [rpm]	T_{2N} [Nm]	P_N [kW]	J [Kgm²]	R1 P_{t0} [kW]	R1	R1 H_2O	R1 $+H_2O$	S5 P_{t0} [kW]	S5	S5 H_2O	S5 $+H_2O$	T6 P_{t0} [kW]	T6	T6 H_2O	T6 $+H_2O$	Type
n_1 = 1500 rpm	**9**	8.91	168	24118	425	0.2135	92	282	203	378	68	210	151	281	63	193	139	258	
	10	10.19	147	27453	423	0.1855	92	282	203	378	68	210	151	281	63	193	139	258	
	11.2	11.14	135	30242	426	0.1701	92	282	203	378	68	210	151	281	63	193	139	258	
	12.5	12.63	119	34086	424	0.1526	92	282	203	378	68	210	151	281	63	193	139	258	
	14	13.90	108	37203	421	0.1416	92	282	203	378	68	210	151	281	63	193	139	258	
	16	16.05	93	38042	372	0.1285	92	282	203	378	68	210	151	281	63	193	139	258	
	18	17.83	84	36300	320	0.1207	97	297	214	399	72	221	159	297	66	203	146	273	
	20	19.89	75	38076	301	0.1168	91	278	200	373	68	207	148	277	62	190	137	255	
	22.4	22.60	66	36598	254	0.1099	87	271	196	363	64	201	146	270	59	185	134	248	**E3B** (x3)
	25	25.60	59	38076	234	0.0654	91	260	195	348	67	193	145	259	62	177	133	238	
	28	28.55	53	38076	209	0.0635	85	244	195	326	63	181	145	243	58	166	133	223	
	31.5	32.46	46	36598	177	0.0602	84	238	195	319	63	177	145	237	58	163	133	218	
	35.5	35.66	42	37333	164	0.0378	79	216	195	290	59	161	145	215	54	148	133	198	
	40	39.77	38	37333	147	0.0368	79	204	195	273	59	151	145	203	54	139	133	187	
	45	45.21	33	35869	125	0.0351	77	199	195	270	57	148	145	201	53	136	133	184	
	50	51.20	29	37333	115	0.0203	77	174	195	267	57	130	145	198	53	119	133	182	
	56	57.11	26	37333	103	0.0198	77	165	195	267	57	123	145	198	53	113	133	182	
	63	64.91	23	35869	87	0.0190	77	161	195	267	57	120	145	198	53	110	133	182	
	71	72.86	21	37333	80	0.0187	77	152	195	267	57	113	145	198	53	104	133	182	
	80	80.82	19	37333	73	0.0163	70	179	156	240	52	133	116	178	48	122	107	164	
	90	90.15	17	36598	64	0.0162	66	169	156	227	49	126	116	169	45	116	107	155	
	100	102.47	15	35148	54	0.0158	65	166	156	222	48	123	116	165	44	113	107	152	
	112	116.05	13	36598	50	0.0084	63	163	156	218	47	121	116	162	43	111	107	149	
	125	129.44	12	36598	44	0.0083	61	154	156	214	45	115	116	159	42	105	107	146	
	140	147.14	10	35148	38	0.0081	61	151	156	214	45	112	116	159	42	103	107	146	**E4B** (x4)
	160	161.65	9	36598	36	0.0047	61	145	156	214	45	108	116	159	42	99	107	146	
	180	180.30	8	36598	32	0.0047	61	137	156	214	45	102	116	159	42	94	107	146	
	200	204.94	7	35148	27	0.0046	61	134	156	214	45	100	116	159	42	92	107	146	
	224	232.11	6	36598	25	0.0025	61	127	156	214	45	94	116	159	42	87	107	146	
	250	258.89	6	36598	22	0.0025	61	121	156	214	45	90	116	159	42	82	107	146	
	280	294.28	5	35148	19	0.0025	61	119	156	214	45	89	116	159	42	81	107	146	
	315	330.31	5	36598	17	0.0024	61	119	156	214	45	89	116	159	42	81	107	146	

For tunnel bell housings with an integrated fan, please refer to the calculation method presented on page 25.
Dimensions of motor bell housing are shown in page 272.

E3B / E4B ...28 — MONOBLOCK HOUSING — 60 Hz — 39 kNm

	i_N	i_{eff}	n_2 [rpm]	T_{2N} [Nm]	P_N [kW]	J [Kgm²]	R1 P_{t0} [kW]	R1	R1 H_2O	R1 $+H_2O$	S5 P_{t0} [kW]	S5	S5 H_2O	S5 $+H_2O$	T6 P_{t0} [kW]	T6	T6 H_2O	T6 $+H_2O$	Type
n_1 = 1200 rpm	**9**	8.91	135	24118	340	0.2135	94	243	209	341	70	180	156	253	64	166	143	233	
	10	10.19	118	27453	339	0.1855	94	243	209	341	70	180	156	253	64	166	143	233	
	11.2	11.14	108	30242	341	0.1701	94	243	209	341	70	180	156	253	64	166	143	233	
	12.5	12.63	95	34086	339	0.1526	94	243	209	341	70	180	156	253	64	166	143	233	
	14	13.90	86	37203	336	0.1416	94	243	209	341	70	180	156	253	64	166	143	233	
	16	16.05	75	38042	298	0.1285	94	243	209	341	70	180	156	253	64	166	143	233	
	18	17.83	67	36300	256	0.1207	100	256	220	359	74	190	164	267	68	175	150	245	
	20	19.89	60	38076	241	0.1168	94	239	206	336	70	178	153	249	64	163	141	229	
	22.4	22.60	53	36598	203	0.1099	89	233	202	327	66	173	150	243	61	159	138	223	**E3B** x3
	25	25.60	47	38076	187	0.0654	93	223	201	313	69	166	149	233	64	153	137	214	
	28	28.55	42	38076	168	0.0635	88	210	201	294	65	156	149	218	60	143	137	201	
	31.5	32.46	37	36598	142	0.0602	87	205	201	287	65	152	149	213	59	140	137	196	
	35.5	35.66	34	37333	132	0.0378	82	186	201	261	61	138	149	194	56	127	137	178	
	40	39.77	30	37333	118	0.0368	81	175	201	246	60	130	149	183	55	120	137	168	
	45	45.21	27	35869	100	0.0351	79	171	201	243	59	127	149	181	54	117	137	166	
	50	51.20	23	37333	92	0.0203	79	150	201	240	59	111	149	179	54	102	137	164	
	56	57.11	21	37333	82	0.0198	79	142	201	240	59	106	149	179	54	97	137	164	
	63	64.91	18	35869	69	0.0190	79	138	201	240	59	103	149	179	54	95	137	164	
	71	72.86	16	37333	64	0.0187	79	131	201	240	59	97	149	179	54	89	137	164	
	80	80.82	15	37333	58	0.0163	72	154	161	216	53	114	119	160	49	105	110	147	
	90	90.15	13	36598	51	0.0162	68	146	161	204	51	108	119	152	46	99	110	139	
	100	102.47	12	35148	43	0.0158	67	143	161	200	50	106	119	149	46	97	110	137	
	112	116.05	10	36598	40	0.0084	65	140	161	196	49	104	119	146	45	96	110	134	
	125	129.44	9	36598	36	0.0083	63	133	161	192	47	99	119	143	43	91	110	131	
	140	147.14	8	35148	30	0.0081	63	130	161	192	47	97	119	143	43	89	110	131	**E4B** x4
	160	161.65	7	36598	28	0.0047	63	125	161	192	47	93	119	143	43	85	110	131	
	180	180.30	7	36598	26	0.0047	63	118	161	192	47	88	119	143	43	81	110	131	
	200	204.94	6	35148	22	0.0046	63	115	161	192	47	86	119	143	43	79	110	131	
	224	232.11	5	36598	20	0.0025	63	109	161	192	47	81	119	143	43	74	110	131	
	250	258.89	5	36598	18	0.0025	63	104	161	192	47	77	119	143	43	71	110	131	
	280	294.28	4	35148	15	0.0025	63	103	161	192	47	76	119	143	43	70	110	131	
	315	330.31	4	36598	14	0.0024	63	103	161	192	47	76	119	143	43	70	110	131	

For tunnel bell housings with an integrated fan, please refer to the calculation method presented on page 25.
Dimensions of motor bell housing are shown in page 272.

E3B / E4B ...28 — MONOBLOCK HOUSING — 60 Hz — 39 kNm

	i_N	i_{eff}	n_2 [rpm]	T_{2N} [Nm]	P_N [kW]	J [Kgm²]	R1 P_{t0} [kW]	R1	R1 H_2O	R1 $+H_2O$	S5 P_{t0} [kW]	S5	S5 H_2O	S5 $+H_2O$	T6 P_{t0} [kW]	T6	T6 H_2O	T6 $+H_2O$	Type
n_1 = 1800 rpm	9	8.91	202	24118	510	0.2135	89	291	197	386	66	216	147	287	61	198	135	264	
	10	10.19	177	27453	508	0.1855	89	291	197	386	66	216	147	287	61	198	135	264	
	11.2	11.14	162	30242	512	0.1701	89	291	197	386	66	216	147	287	61	198	135	264	
	12.5	12.63	143	34086	509	0.1526	89	291	197	386	66	216	147	287	61	198	135	264	
	14	13.90	130	37203	505	0.1416	89	291	197	386	66	216	147	287	61	198	135	264	
	16	16.05	112	38042	447	0.1285	89	291	197	386	66	216	147	287	61	198	135	264	
	18	17.83	101	36300	384	0.1207	94	306	207	407	70	228	154	303	64	209	142	278	
	20	19.89	90	38076	361	0.1168	88	287	194	380	66	213	144	283	60	196	132	260	
	22.4	22.60	80	36598	305	0.1099	84	279	190	370	62	207	141	275	57	191	130	253	E3B (x3)
	25	25.60	70	38076	280	0.0654	88	268	189	355	65	199	141	264	60	183	129	242	
	28	28.55	63	38076	251	0.0635	82	251	189	333	61	186	141	247	56	171	129	227	
	31.5	32.46	55	36598	213	0.0602	82	245	189	325	61	182	141	242	56	167	129	222	
	35.5	35.66	50	37333	197	0.0378	77	223	189	295	57	165	141	219	53	152	129	202	
	40	39.77	45	37333	177	0.0368	77	210	189	279	57	156	141	207	52	143	129	190	
	45	45.21	40	35869	150	0.0351	75	205	189	275	56	152	141	205	51	140	129	188	
	50	51.20	35	37333	137	0.0203	75	180	189	272	55	133	141	202	51	123	129	186	
	56	57.11	32	37333	123	0.0198	75	170	189	272	55	126	141	202	51	116	129	186	
	63	64.91	28	35869	104	0.0190	75	166	189	272	55	123	141	202	51	113	129	186	
	71	72.86	25	37333	97	0.0187	75	157	189	272	55	116	141	202	51	107	129	186	
	80	80.82	22	37333	87	0.0163	68	184	151	245	50	137	112	182	46	126	103	167	
	90	90.15	20	36598	77	0.0162	64	174	151	231	48	130	112	172	44	119	103	158	
	100	102.47	18	35148	65	0.0158	63	171	151	227	47	127	112	168	43	117	103	155	
	112	116.05	16	36598	59	0.0084	62	168	151	223	46	125	112	165	42	115	103	152	
	125	129.44	14	36598	53	0.0083	59	159	151	218	44	118	112	162	40	109	103	149	
	140	147.14	12	35148	45	0.0081	59	156	151	218	44	116	112	162	40	106	103	149	E4B (x4)
	160	161.65	11	36598	43	0.0047	59	149	151	218	44	111	112	162	40	102	103	149	
	180	180.30	10	36598	38	0.0047	59	142	151	218	44	105	112	162	40	97	103	149	
	200	204.94	9	35148	32	0.0046	59	138	151	218	44	103	112	162	40	94	103	149	
	224	232.11	8	36598	30	0.0025	59	131	151	218	44	97	112	162	40	89	103	149	
	250	258.89	7	36598	27	0.0025	59	124	151	218	44	92	112	162	40	85	103	149	
	280	294.28	6	35148	23	0.0025	59	123	151	218	44	91	112	162	40	84	103	149	
	315	330.31	5	36598	21	0.0024	59	123	151	218	44	91	112	162	40	84	103	149	

For tunnel bell housings with an integrated fan, please refer to the calculation method presented on page 25.
Dimensions of motor bell housing are shown in page 272.

E3B / E4B ...31 — MONOBLOCK HOUSING — 50 Hz — 50 kNm

	i_N	i_{eff}	n_2 [rpm]	T_{2N} [Nm]	P_N [kW]	J [Kgm²]	R1 P_{t0} [kW]	R1	R1 H_2O	R1 $+H_2O$	S5 P_{t0} [kW]	S5	S5 H_2O	S5 $+H_2O$	T6 P_{t0} [kW]	T6	T6 H_2O	T6 $+H_2O$	Type
n_1 = 1000 rpm	**12.5**	12.07	83	32791	284	0.2349	115	246	334	429	85	183	248	319	78	168	228	293	
	14	13.80	72	37475	284	0.2019	115	246	334	429	85	183	248	319	78	168	228	293	
	16	15.09	66	40821	283	0.1838	115	246	334	429	85	183	248	319	78	168	228	293	
	18	17.10	58	46175	283	0.1633	115	246	334	429	85	183	248	319	78	168	228	293	
	20	18.82	53	49521	276	0.1504	115	246	334	429	85	183	248	319	78	168	228	293	
	22.4	21.73	46	49521	239	0.1351	115	246	334	429	85	183	248	319	78	168	228	293	
	25.0	24.14	41	49350	214	0.1261	120	260	342	453	89	193	254	337	82	178	233	310	
	28	26.93	37	49520	193	0.1211	115	243	330	423	85	180	245	314	78	166	225	289	
	31.5	30.61	33	49520	169	0.1132	110	236	330	410	82	175	245	305	75	161	225	280	**E3B** x3
	35.5	34.67	29	49520	150	0.0680	114	226	330	394	84	168	245	293	78	155	225	269	
	40	38.67	26	49520	134	0.0656	106	212	330	369	79	158	245	274	73	145	225	252	
	45	43.95	23	49520	118	0.0618	106	206	330	359	79	153	245	267	73	141	225	245	
	50	48.29	21	49520	107	0.0391	100	188	330	337	74	140	245	250	68	129	225	230	
	56	53.86	19	49520	96	0.0379	97	178	330	337	72	132	245	250	66	121	225	230	
	63	61.22	16	48741	83	0.0359	97	173	330	337	72	128	245	250	66	118	225	230	
	71	69.33	14	49855	75	0.0209	97	151	330	337	72	112	245	250	66	103	225	230	
	80	77.33	13	49855	68	0.0203	97	143	330	337	72	106	245	250	66	98	225	230	
	90	87.90	11	48741	58	0.0194	97	139	330	337	72	103	245	250	66	95	225	230	
	100	98.67	10	49855	53	0.0190	97	134	330	337	72	100	245	250	66	92	225	230	
	112	109.45	9	49855	48	0.0166	84	156	264	272	62	116	196	202	57	107	180	186	
	125	122.08	8	49855	43	0.0164	79	148	264	269	59	110	196	200	54	101	180	184	
	140	138.76	7	47780	36	0.0160	78	145	264	269	58	107	196	200	53	99	180	184	
	160	157.16	6	49855	33	0.0085	78	142	264	269	58	105	196	200	53	97	180	184	
	180	175.29	6	49855	30	0.0084	78	134	264	269	58	100	196	200	53	92	180	184	
	200	199.25	5	47780	25	0.0082	78	131	264	269	58	97	196	200	53	90	180	184	**E4B** x4
	224	218.90	5	49855	24	0.0048	78	126	264	269	58	94	196	200	53	86	180	184	
	250	244.15	4	49855	21	0.0047	78	120	264	269	58	89	196	200	53	82	180	184	
	280	277.53	4	47780	18	0.0047	78	116	264	269	58	86	196	200	53	79	180	184	
	315	314.31	3	49855	17	0.0026	78	110	264	269	58	82	196	200	53	75	180	184	
	355	350.58	3	49855	15	0.0025	78	107	264	269	58	80	196	200	53	73	180	184	
	400	398.50	3	46829	12	0.0025	78	107	264	269	58	80	196	200	53	73	180	184	
	450	447.29	2	49711	12	0.0025	78	107	264	269	58	80	196	200	53	73	180	184	

For tunnel bell housings with an integrated fan, please refer to the calculation method presented on page 25.
Dimensions of motor bell housing are shown in page 272.

E3B / E4B ...31 — MONOBLOCK HOUSING — 50 Hz — 50 kNm

	i_N	i_{eff}	n_2 [rpm]	T_{2N} [Nm]	P_N [kW]	J [Kgm²]	R1 P_{t0} [kW]	R1	R1 H_2O	R1 +H_2O	S5 P_{t0} [kW]	S5	S5 H_2O	S5 +H_2O	T6 P_{t0} [kW]	T6	T6 H_2O	T6 +H_2O	Type
n_1 = 1500 rpm	**12.5**	12.07	124	32791	427	0.2349	109	328	318	510	81	244	236	379	75	224	217	349	
	14	13.80	109	37475	427	0.2019	109	328	318	510	81	244	236	379	75	224	217	349	
	16	15.09	99	40821	425	0.1838	109	328	318	510	81	244	236	379	75	224	217	349	
	18	17.10	88	46175	424	0.1633	109	328	318	510	81	244	236	379	75	224	217	349	
	20	18.82	80	49521	413	0.1504	109	328	318	510	81	244	236	379	75	224	217	349	
	22.4	21.73	69	49521	358	0.1351	109	328	318	510	81	244	236	379	75	224	217	349	
	25	24.14	62	49350	321	0.1261	114	347	325	540	85	258	242	401	78	237	222	369	
	28	26.93	56	49520	289	0.1211	109	324	314	503	81	241	233	374	75	221	214	344	
	31.5	30.61	49	49520	254	0.1132	105	314	314	488	78	233	233	363	71	215	214	333	**E3B** (x3)
	35.5	34.67	43	49520	224	0.0680	108	302	314	469	80	224	233	348	74	206	214	320	
	40	38.67	39	49520	201	0.0656	101	283	314	439	75	210	233	326	69	193	214	300	
	45	43.95	34	49520	177	0.0618	101	275	314	428	75	204	233	318	69	188	214	292	
	50	48.29	31	49520	161	0.0391	95	251	314	401	71	186	233	298	65	171	214	274	
	56	53.86	28	49520	144	0.0379	92	237	314	401	68	176	233	298	63	162	214	274	
	63	61.22	25	48741	125	0.0359	92	230	314	401	68	171	233	298	63	157	214	274	
	71	69.33	22	49855	113	0.0209	92	202	314	401	68	150	233	298	63	138	214	274	
	80	77.33	19	49855	101	0.0203	92	191	314	401	68	142	233	298	63	131	214	274	
	90	87.90	17	48741	87	0.0194	92	185	314	401	68	138	233	298	63	127	214	274	
	100	98.67	15	49855	79	0.0190	92	179	314	401	68	133	233	298	63	122	214	274	
	112	109.45	14	49855	72	0.0166	80	209	251	324	59	155	186	241	55	142	171	221	
	125	122.08	12	49855	64	0.0164	76	198	251	321	56	147	186	238	52	135	171	219	
	140	138.76	11	47780	54	0.0160	74	193	251	321	55	143	186	238	51	132	171	219	
	160	157.16	10	49855	50	0.0085	74	189	251	321	55	140	186	238	51	129	171	219	
	180	175.29	9	49855	45	0.0084	74	179	251	321	55	133	186	238	51	122	171	219	
	200	199.25	8	47780	38	0.0082	74	175	251	321	55	130	186	238	51	119	171	219	**E4B** (x4)
	224	218.90	7	49855	36	0.0048	74	169	251	321	55	125	186	238	51	115	171	219	
	250	244.15	6	49855	32	0.0047	74	160	251	321	55	119	186	238	51	109	171	219	
	280	277.53	5	47780	27	0.0047	74	155	251	321	55	115	186	238	51	106	171	219	
	315	314.31	5	49855	25	0.0026	74	147	251	321	55	109	186	238	51	100	171	219	
	355	350.58	4	49855	22	0.0025	74	143	251	321	55	106	186	238	51	98	171	219	
	400	398.50	4	46829	18	0.0025	74	143	251	321	55	106	186	238	51	98	171	219	
	450	447.29	3	49711	17	0.0025	74	143	251	321	55	106	186	238	51	98	171	219	

For tunnel bell housings with an integrated fan, please refer to the calculation method presented on page 25.
Dimensions of motor bell housing are shown in page 272.

E3B / E4B ...31 — MONOBLOCK HOUSING — 60 Hz — 50 kNm

	i_N	i_{eff}	n_2 [rpm]	T_{2N} [Nm]	P_N [kW]	J [Kgm²]	R1 P_{t0} [kW]	R1	R1 H_2O	R1 +H_2O	S5 P_{t0} [kW]	S5	S5 H_2O	S5 +H_2O	T6 P_{t0} [kW]	T6	T6 H_2O	T6 +H_2O	Type
n_1 = 1200 rpm	**12.5**	12.07	99	32791	341	0.2349	113	282	327	459	84	210	243	341	77	193	224	314	
	14	13.80	87	37475	341	0.2019	113	282	327	459	84	210	243	341	77	193	224	314	
	16	15.09	80	40821	340	0.1838	113	282	327	459	84	210	243	341	77	193	224	314	
	18	17.10	70	46175	339	0.1633	113	282	327	459	84	210	243	341	77	193	224	314	
	20	18.82	64	49521	331	0.1504	113	282	327	459	84	210	243	341	77	193	224	314	
	22.4	21.73	55	49521	286	0.1351	113	282	327	459	84	210	243	341	77	193	224	314	
	25	24.14	50	49350	257	0.1261	118	299	335	486	87	222	249	361	80	204	229	332	
	28	26.93	45	49520	231	0.1211	112	278	323	453	84	207	240	337	77	190	221	309	
	31.5	30.61	39	49520	203	0.1132	108	270	323	439	80	201	240	327	74	184	221	300	**E3B** (x3)
	35.5	34.67	35	49520	179	0.0680	111	259	323	422	83	193	240	314	76	177	221	288	
	40	38.67	31	49520	161	0.0656	104	243	323	395	77	181	240	294	71	166	221	270	
	45	43.95	27	49520	142	0.0618	104	237	323	385	77	176	240	286	71	162	221	263	
	50	48.29	25	49520	129	0.0391	98	216	323	361	73	160	240	268	67	147	221	246	
	56	53.86	22	49520	116	0.0379	95	204	323	361	71	151	240	268	65	139	221	246	
	63	61.22	20	48741	100	0.0359	95	198	323	361	70	147	240	268	65	135	221	246	
	71	69.33	17	49855	90	0.0209	95	174	323	361	70	129	240	268	65	119	221	246	
	80	77.33	16	49855	81	0.0203	95	164	323	361	70	122	240	268	65	112	221	246	
	90	87.90	14	48741	70	0.0194	95	159	323	361	70	118	240	268	65	109	221	246	
	100	98.67	12	49855	63	0.0190	95	154	323	361	70	114	240	268	65	105	221	246	
	112	109.45	11	49855	57	0.0166	82	179	259	292	61	133	192	217	56	122	177	199	
	125	122.08	10	49855	51	0.0164	78	170	259	289	58	126	192	215	53	116	177	197	
	140	138.76	9	47780	43	0.0160	76	166	259	289	57	123	192	215	52	113	177	197	
	160	157.16	8	49855	40	0.0085	76	163	259	289	57	121	192	215	52	111	177	197	
	180	175.29	7	49855	36	0.0084	76	154	259	289	57	114	192	215	52	105	177	197	
	200	199.25	6	47780	30	0.0082	76	150	259	289	57	112	192	215	52	103	177	197	**E4B** (x4)
	224	218.90	5	49855	29	0.0048	76	145	259	289	57	108	192	215	52	99	177	197	
	250	244.15	5	49855	26	0.0047	76	137	259	289	57	102	192	215	52	94	177	197	
	280	277.53	4	47780	22	0.0047	76	133	259	289	57	99	192	215	52	91	177	197	
	315	314.31	4	49855	20	0.0026	76	126	259	289	57	94	192	215	52	86	177	197	
	355	350.58	3	49855	18	0.0025	76	123	259	289	57	92	192	215	52	84	177	197	
	400	398.50	3	46829	15	0.0025	76	123	259	289	57	92	192	215	52	84	177	197	
	450	447.29	3	49711	14	0.0025	76	123	259	289	57	92	192	215	52	84	177	197	

For tunnel bell housings with an integrated fan, please refer to the calculation method presented on page 25.
Dimensions of motor bell housing are shown in page 272.

E3B / E4B ...31 — MONOBLOCK HOUSING — 60 Hz — 50 kNm

n_1 = 1800 rpm

i_N	i_{eff}	n_2 [rpm]	T_{2N} [Nm]	P_N [kW]	J [Kgm²]	R1 P_{t0} [kW]	R1	R1 H_2O	R1 $+H_2O$	S5 P_{t0} [kW]	S5	S5 H_2O	S5 $+H_2O$	T6 P_{t0} [kW]	T6	T6 H_2O	T6 $+H_2O$	Type
12.5	12.07	149	32791	512	0.2349	106	338	308	521	79	251	229	387	72	231	211	356	
14	13.80	130	37475	512	0.2019	106	338	308	521	79	251	229	387	72	231	211	356	
16	15.09	119	40821	510	0.1838	106	338	308	521	79	251	229	387	72	231	211	356	
18	17.10	105	46175	509	0.1633	106	338	308	521	79	251	229	387	72	231	211	356	
20	18.82	96	49521	496	0.1504	106	338	308	521	79	251	229	387	72	231	211	356	
22.4	21.73	83	49521	430	0.1351	106	338	308	521	79	251	229	387	72	231	211	356	
25	24.14	75	49350	385	0.1261	111	358	316	550	82	266	235	409	76	244	216	376	
28	26.93	67	49520	347	0.1211	106	333	305	513	79	248	226	381	72	228	208	351	
31.5	30.61	59	49520	305	0.1132	102	324	305	498	75	240	226	370	69	221	208	340	**E3B** (x3)
35.5	34.67	52	49520	269	0.0680	105	311	305	478	78	231	226	355	72	212	208	327	
40	38.67	47	49520	241	0.0656	98	291	305	448	73	216	226	333	67	199	208	306	
45	43.95	41	49520	212	0.0618	98	283	305	436	73	211	226	324	67	194	208	298	
50	48.29	37	49520	193	0.0391	92	259	305	409	68	192	226	304	63	177	208	279	
56	53.86	33	49520	173	0.0379	89	244	305	409	66	181	226	304	61	167	208	279	
63	61.22	29	48741	150	0.0359	89	237	305	409	66	176	226	304	61	162	208	279	
71	69.33	26	49855	136	0.0209	89	208	305	409	66	154	226	304	61	142	208	279	
80	77.33	23	49855	122	0.0203	89	197	305	409	66	146	226	304	61	134	208	279	
90	87.90	20	48741	105	0.0194	89	191	305	409	66	142	226	304	61	130	208	279	
100	98.67	18	49855	95	0.0190	89	184	305	409	66	137	226	304	61	126	208	279	
112	109.45	16	49855	86	0.0166	77	215	243	331	58	160	181	246	53	147	166	226	
125	122.08	15	49855	77	0.0164	73	203	243	327	55	151	181	243	50	139	166	223	
140	138.76	13	47780	65	0.0160	72	199	243	327	53	148	181	243	49	136	166	223	
160	157.16	11	49855	60	0.0085	72	195	243	327	53	145	181	243	49	133	166	223	
180	175.29	10	49855	54	0.0084	72	184	243	327	53	137	181	243	49	126	166	223	
200	199.25	9	47780	45	0.0082	72	180	243	327	53	134	181	243	49	123	166	223	**E4B** (x4)
224	218.90	8	49855	43	0.0048	72	174	243	327	53	129	181	243	49	119	166	223	
250	244.15	7	49855	38	0.0047	72	165	243	327	53	122	181	243	49	112	166	223	
280	277.53	6	47780	32	0.0047	72	160	243	327	53	119	181	243	49	109	166	223	
315	314.31	6	49855	30	0.0026	72	151	243	327	53	112	181	243	49	103	166	223	
355	350.58	5	49855	27	0.0025	72	147	243	327	53	110	181	243	49	101	166	223	
400	398.50	5	46829	22	0.0025	72	147	243	327	53	110	181	243	49	101	166	223	
450	447.29	4	49711	21	0.0025	72	147	243	327	53	110	181	243	49	101	166	223	

For tunnel bell housings with an integrated fan, please refer to the calculation method presented on page 25.
Dimensions of motor bell housing are shown in page 272.

E3C / E4C ...18 — MONOBLOCK HOUSING — 50 Hz — 10 kNm

	i_N	i_{eff}	n_2 [rpm]	T_{2N} [Nm]	P_N [kW]	J [Kgm²]	R1 P_{t0} [kW]				S5 P_{t0} [kW]				T6 P_{t0} [kW]				Type
									H_2O	$+H_2O$			H_2O	$+H_2O$			H_2O	$+H_2O$	
n_1 = 1000 rpm	25	25.41	39	9366	39	0.0072	46	55	70	84	34	41	52	62	31	37	48	57	E3C x3
	28	28.34	35	9366	35	0.0069	45	53	70	84	34	40	52	62	31	36	48	57	
	31.5	32.16	31	9366	30	0.0066	44	52	70	84	33	39	52	62	30	36	48	57	
	35.5	35.39	28	9366	28	0.0041	38	51	70	84	28	38	52	62	26	35	48	57	
	40	39.48	25	9366	25	0.0040	37	51	70	84	27	38	52	62	25	35	48	57	
	45	44.80	22	9366	22	0.0038	37	51	70	84	27	38	52	62	25	35	48	57	
	50	50.82	20	9366	19	0.0022	37	51	70	84	27	38	52	62	25	35	48	57	
	56	56.69	18	9366	17	0.0022	37	51	70	84	27	38	52	62	25	35	48	57	
	63	64.32	16	9366	15	0.0021	37	51	70	84	27	38	52	62	25	35	48	57	
	71	71.15	14	9016	13	0.0020	37	51	70	84	27	38	52	62	25	35	48	57	
	80	81.20	12	9191	12	0.0032	32	41	56	67	24	30	41	50	22	28	38	46	E4C x4
	90	90.57	11	9191	11	0.0031	31	41	56	67	23	30	41	50	21	28	38	46	
	100	102.77	10	9191	9	0.0031	32	41	56	67	24	30	41	50	22	28	38	46	
	112	116.60	9	9191	8	0.0016	30	41	56	67	22	30	41	50	20	28	38	46	
	125	130.05	8	9191	7	0.0015	29	41	56	67	22	30	41	50	20	28	38	46	
	140	147.57	7	9191	7	0.0015	30	41	56	67	22	30	41	50	20	28	38	46	
	160	162.40	6	9191	6	0.0009	29	41	56	67	22	30	41	50	20	28	38	46	
	180	181.14	6	9191	5	0.0009	29	41	56	67	22	30	41	50	20	28	38	46	
	200	205.54	5	9191	5	0.0009	29	41	56	67	22	30	41	50	20	28	38	46	
	224	233.19	4	9191	4	0.0005	29	41	56	67	22	30	41	50	20	28	38	46	
	250	260.10	4	9191	4	0.0005	29	41	56	67	22	30	41	50	20	28	38	46	
	280	295.13	3	9191	3	0.0005	29	41	56	67	22	30	41	50	20	28	38	46	
	315	326.47	3	8844	3	0.0005	29	41	56	67	22	30	41	50	20	28	38	46	
n_1 = 1500 rpm	25	25.41	59	9366	58	0.0072	44	73	67	100	32	54	50	74	30	50	46	68	E3C x3
	28	28.34	53	9366	52	0.0069	43	71	67	100	32	53	50	74	29	49	46	68	
	31.5	32.16	47	9366	46	0.0066	42	69	67	100	31	52	50	74	29	47	46	68	
	35.5	35.39	42	9366	42	0.0041	36	68	67	100	27	51	50	74	24	46	46	68	
	40	39.48	38	9366	37	0.0040	35	68	67	100	26	51	50	74	24	46	46	68	
	45	44.80	33	9366	33	0.0038	35	68	67	100	26	51	50	74	24	46	46	68	
	50	50.82	30	9366	29	0.0022	35	68	67	100	26	51	50	74	24	46	46	68	
	56	56.69	26	9366	26	0.0022	35	68	67	100	26	51	50	74	24	46	46	68	
	63	64.32	23	9366	23	0.0021	35	68	67	100	26	51	50	74	24	46	46	68	
	71	71.15	21	9016	20	0.0020	35	68	67	100	26	51	50	74	24	46	46	68	
	80	81.20	18	9191	18	0.0032	31	54	53	80	23	40	39	59	21	37	36	55	E4C x4
	90	90.57	17	9191	16	0.0031	30	54	53	80	22	40	39	59	20	37	36	55	
	100	102.77	15	9191	14	0.0031	31	54	53	80	23	40	39	59	21	37	36	55	
	112	116.60	13	9191	12	0.0016	28	54	53	80	21	40	39	59	19	37	36	55	
	125	130.05	12	9191	11	0.0015	28	54	53	80	21	40	39	59	19	37	36	55	
	140	147.57	10	9191	10	0.0015	28	54	53	80	21	40	39	59	19	37	36	55	
	160	162.40	9	9191	9	0.0009	28	54	53	80	21	40	39	59	19	37	36	55	
	180	181.14	8	9191	8	0.0009	28	54	53	80	21	40	39	59	19	37	36	55	
	200	205.54	7	9191	7	0.0009	28	54	53	80	21	40	39	59	19	37	36	55	
	224	233.19	6	9191	6	0.0005	28	54	53	80	21	40	39	59	19	37	36	55	
	250	260.10	6	9191	6	0.0005	28	54	53	80	21	40	39	59	19	37	36	55	
	280	295.13	5	9191	5	0.0005	28	54	53	80	21	40	39	59	19	37	36	55	
	315	326.47	5	8844	4	0.0005	28	54	53	80	21	40	39	59	19	37	36	55	

E3C / E4C ...18 — MONOBLOCK HOUSING — 60 Hz — 10 kNm

	i_N	i_{eff}	n_2 [rpm]	T_{2N} [Nm]	P_N [kW]	J [Kgm²]	R1 P_{t0} [kW]	R1	R1 H_2O	R1 $+H_2O$	S5 P_{t0} [kW]	S5	S5 H_2O	S5 $+H_2O$	T6 P_{t0} [kW]	T6	T6 H_2O	T6 $+H_2O$	Type
n_1 = 1200 rpm	**25**	25.41	47	9366	46	0.0072	45	63	69	90	33	47	51	67	31	43	47	61	E3C (x3)
	28	28.34	42	9366	42	0.0069	44	61	69	90	33	45	51	67	30	42	47	61	
	31.5	32.16	37	9366	37	0.0066	43	60	69	90	32	44	51	67	30	41	47	61	
	35.5	35.39	34	9366	33	0.0041	37	58	69	90	27	43	51	67	25	40	47	61	
	40	39.48	30	9366	30	0.0040	36	58	69	90	27	43	51	67	25	40	47	61	
	45	44.80	27	9366	26	0.0038	36	58	69	90	27	43	51	67	25	40	47	61	
	50	50.82	24	9366	23	0.0022	36	58	69	90	27	43	51	67	25	40	47	61	
	56	56.69	21	9366	21	0.0022	36	58	69	90	27	43	51	67	25	40	47	61	
	63	64.32	19	9366	18	0.0021	36	58	69	90	27	43	51	67	25	40	47	61	
	71	71.15	17	9016	16	0.0020	36	58	69	90	27	43	51	67	25	40	47	61	
	80	81.20	15	9191	14	0.0032	32	47	55	72	24	35	41	53	22	32	37	49	E4C (x4)
	90	90.57	13	9191	13	0.0031	31	47	55	72	23	35	41	53	21	32	37	49	
	100	102.77	12	9191	11	0.0031	31	47	55	72	23	35	41	53	21	32	37	49	
	112	116.60	10	9191	10	0.0016	29	47	55	72	22	35	41	53	20	32	37	49	
	125	130.05	9	9191	9	0.0015	29	47	55	72	21	35	41	53	20	32	37	49	
	140	147.57	8	9191	8	0.0015	29	47	55	72	22	35	41	53	20	32	37	49	
	160	162.40	7	9191	7	0.0009	29	47	55	72	21	35	41	53	20	32	37	49	
	180	181.14	7	9191	6	0.0009	29	47	55	72	21	35	41	53	20	32	37	49	
	200	205.54	6	9191	6	0.0009	29	47	55	72	21	35	41	53	20	32	37	49	
	224	233.19	5	9191	5	0.0005	29	47	55	72	21	35	41	53	20	32	37	49	
	250	260.10	5	9191	4	0.0005	29	47	55	72	21	35	41	53	20	32	37	49	
	280	295.13	4	9191	4	0.0005	29	47	55	72	21	35	41	53	20	32	37	49	
	315	326.47	4	8844	3	0.0005	29	47	55	72	21	35	41	53	20	32	37	49	
n_1 = 1800 rpm	**25**	25.41	71	9366	69	0.0072	42	75	65	102	31	56	48	76	29	51	44	70	E3C (x3)
	28	28.34	64	9366	62	0.0069	42	73	65	102	31	54	48	76	28	50	44	70	
	31.5	32.16	56	9366	55	0.0066	41	71	65	102	30	53	48	76	28	49	44	70	
	35.5	35.39	51	9366	50	0.0041	35	70	65	102	26	52	48	76	24	48	44	70	
	40	39.48	46	9366	45	0.0040	34	70	65	102	25	52	48	76	23	48	44	70	
	45	44.80	40	9366	39	0.0038	34	70	65	102	25	52	48	76	23	48	44	70	
	50	50.82	35	9366	35	0.0022	34	70	65	102	25	52	48	76	23	48	44	70	
	56	56.69	32	9366	31	0.0022	34	70	65	102	25	52	48	76	23	48	44	70	
	63	64.32	28	9366	27	0.0021	34	70	65	102	25	52	48	76	23	48	44	70	
	71	71.15	25	9016	24	0.0020	34	70	65	102	25	52	48	76	23	48	44	70	
	80	81.20	22	9191	21	0.0032	30	56	51	82	22	42	38	61	20	38	35	56	E4C (x4)
	90	90.57	20	9191	19	0.0031	29	56	51	82	22	42	38	61	20	38	35	56	
	100	102.77	18	9191	17	0.0031	30	56	51	82	22	42	38	61	20	38	35	56	
	112	116.60	15	9191	15	0.0016	27	56	51	82	20	42	38	61	19	38	35	56	
	125	130.05	14	9191	13	0.0015	27	56	51	82	20	42	38	61	19	38	35	56	
	140	147.57	12	9191	12	0.0015	27	56	51	82	20	42	38	61	19	38	35	56	
	160	162.40	11	9191	11	0.0009	27	56	51	82	20	42	38	61	19	38	35	56	
	180	181.14	10	9191	10	0.0009	27	56	51	82	20	42	38	61	19	38	35	56	
	200	205.54	9	9191	8	0.0009	27	56	51	82	20	42	38	61	19	38	35	56	
	224	233.19	8	9191	7	0.0005	27	56	51	82	20	42	38	61	19	38	35	56	
	250	260.10	7	9191	7	0.0005	27	56	51	82	20	42	38	61	19	38	35	56	
	280	295.13	6	9191	6	0.0005	27	56	51	82	20	42	38	61	19	38	35	56	
	315	326.47	6	8844	5	0.0005	27	56	51	82	20	42	38	61	19	38	35	56	

E3C / E4C ...19 — MONOBLOCK HOUSING — 50 Hz — 13 kNm

	i_N	i_{eff}	n_2 [rpm]	T_{2N} [Nm]	P_N [kW]	J [Kgm²]	R1 P_{t0} [kW]	R1	R1 H_2O	R1 +H_2O	S5 P_{t0} [kW]	S5	S5 H_2O	S5 +H_2O	T6 P_{t0} [kW]	T6	T6 H_2O	T6 +H_2O	Type
n_1 = 1000 rpm	**31.5**	31.53	32	12301	41	0.0074	47	58	102	113	35	43	76	84	32	40	70	77	E3C (x3)
	35.5	35.17	28	12301	37	0.0071	41	58	102	113	31	43	76	84	28	39	70	77	
	40	39.90	25	11858	31	0.0067	41	58	102	113	31	43	76	84	28	39	70	77	
	45	43.92	23	12078	29	0.0043	41	58	102	113	31	43	76	84	28	39	70	77	
	50	48.98	20	12078	26	0.0041	41	58	102	113	31	43	76	84	28	39	70	77	
	56	55.58	18	11858	22	0.0039	41	58	102	113	31	43	76	84	28	39	70	77	
	63	63.06	16	12078	20	0.0023	41	58	102	113	31	43	76	84	28	39	70	77	
	71	70.33	14	12078	18	0.0022	41	58	102	113	31	43	76	84	28	39	70	77	
	80	79.81	13	11639	15	0.0021	41	58	102	113	31	43	76	84	28	39	70	77	
	90	88.28	11	11208	13	0.0021	41	58	102	113	31	43	76	84	28	39	70	77	
	100	100.75	10	12078	13	0.0032	34	46	82	91	25	34	61	67	23	32	56	62	E4C (x4)
	112	112.37	9	12078	11	0.0031	34	46	82	91	25	34	61	67	23	32	56	62	
	125	127.51	8	11639	10	0.0031	34	46	82	91	25	34	61	67	23	32	56	62	
	140	144.66	7	11858	9	0.0016	34	46	82	91	25	34	61	67	23	32	56	62	
	160	161.36	6	11858	8	0.0015	34	46	82	91	25	34	61	67	23	32	56	62	
	180	183.09	5	11639	7	0.0015	34	46	82	91	25	34	61	67	23	32	56	62	
	200	201.50	5	11858	6	0.0009	34	46	82	91	25	34	61	67	23	32	56	62	
	224	224.75	4	11858	6	0.0009	34	46	82	91	25	34	61	67	23	32	56	62	
	250	255.02	4	11423	5	0.0009	34	46	82	91	25	34	61	67	23	32	56	62	
	280	289.33	3	11858	4	0.0005	34	46	82	91	25	34	61	67	23	32	56	62	
	315	322.71	3	11858	4	0.0005	34	46	82	91	25	34	61	67	23	32	56	62	
	355	366.18	3	11423	3	0.0005	34	46	82	91	25	34	61	67	23	32	56	62	
	400	405.06	2	10996	3	0.0005	34	46	82	91	25	34	61	67	23	32	56	62	
n_1 = 1500 rpm	**31.5**	31.53	48	12301	61	0.0074	44	78	98	135	33	58	72	100	30	53	67	92	E3C (x3)
	35.5	35.17	43	12301	55	0.0071	40	77	98	135	29	57	72	100	27	53	67	92	
	40	39.90	38	11858	47	0.0067	40	77	98	135	29	57	72	100	27	53	67	92	
	45	43.92	34	12078	43	0.0043	40	77	98	135	29	57	72	100	27	53	67	92	
	50	48.98	31	12078	39	0.0041	40	77	98	135	29	57	72	100	27	53	67	92	
	56	55.58	27	11858	34	0.0039	40	77	98	135	29	57	72	100	27	53	67	92	
	63	63.06	24	12078	30	0.0023	40	77	98	135	29	57	72	100	27	53	67	92	
	71	70.33	21	12078	27	0.0022	40	77	98	135	29	57	72	100	27	53	67	92	
	80	79.81	19	11639	23	0.0021	40	77	98	135	29	57	72	100	27	53	67	92	
	90	88.28	17	11208	20	0.0021	40	77	98	135	29	57	72	100	27	53	67	92	
	100	100.75	15	12078	19	0.0032	32	62	78	108	24	46	58	80	22	42	53	74	E4C (x4)
	112	112.37	13	12078	17	0.0031	32	62	78	108	24	46	58	80	22	42	53	74	
	125	127.51	12	11639	14	0.0031	32	62	78	108	24	46	58	80	22	42	53	74	
	140	144.66	10	11858	13	0.0016	32	62	78	108	24	46	58	80	22	42	53	74	
	160	161.36	9	11858	12	0.0015	32	62	78	108	24	46	58	80	22	42	53	74	
	180	183.09	8	11639	10	0.0015	32	62	78	108	24	46	58	80	22	42	53	74	
	200	201.50	7	11858	9	0.0009	32	62	78	108	24	46	58	80	22	42	53	74	
	224	224.75	7	11858	8	0.0009	32	62	78	108	24	46	58	80	22	42	53	74	
	250	255.02	6	11423	7	0.0009	32	62	78	108	24	46	58	80	22	42	53	74	
	280	289.33	5	11858	6	0.0005	32	62	78	108	24	46	58	80	22	42	53	74	
	315	322.71	5	11858	6	0.0005	32	62	78	108	24	46	58	80	22	42	53	74	
	355	366.18	4	11423	5	0.0005	32	62	78	108	24	46	58	80	22	42	53	74	
	400	405.06	4	10996	4	0.0005	32	62	78	108	24	46	58	80	22	42	53	74	

E3C / E4C ...19 — MONOBLOCK HOUSING — 60 Hz — 13 kNm

	i_N	i_{eff}	n_2 [rpm]	T_{2N} [Nm]	P_N [kW]	J [Kgm²]	R1 P_{t0} [kW]	R1	R1 H_2O	R1 $+H_2O$	S5 P_{t0} [kW]	S5	S5 H_2O	S5 $+H_2O$	T6 P_{t0} [kW]	T6	T6 H_2O	T6 $+H_2O$	Type
n_1 = 1200 rpm	**31.5**	31.53	38	12301	49	0.0074	46	67	100	122	34	50	75	90	31	46	69	83	E3C (x3)
	35.5	35.17	34	12301	44	0.0071	41	66	100	122	30	49	75	90	28	45	69	83	
	40	39.90	30	11858	37	0.0067	41	66	100	122	30	49	75	90	28	45	69	83	
	45	43.92	27	12078	35	0.0043	41	66	100	122	30	49	75	90	28	45	69	83	
	50	48.98	24	12078	31	0.0041	41	66	100	122	30	49	75	90	28	45	69	83	
	56	55.58	22	11858	27	0.0039	41	66	100	122	30	49	75	90	28	45	69	83	
	63	63.06	19	12078	24	0.0023	41	66	100	122	30	49	75	90	28	45	69	83	
	71	70.33	17	12078	22	0.0022	41	66	100	122	30	49	75	90	28	45	69	83	
	80	79.81	15	11639	18	0.0021	41	66	100	122	30	49	75	90	28	45	69	83	
	90	88.28	14	11208	16	0.0021	41	66	100	122	30	49	75	90	28	45	69	83	
	100	100.75	12	12078	15	0.0032	33	53	80	97	25	39	60	72	23	36	55	66	E4C (x4)
	112	112.37	11	12078	14	0.0031	33	53	80	97	24	39	60	72	23	36	55	66	
	125	127.51	9	11639	11	0.0031	33	53	80	97	24	39	60	72	23	36	55	66	
	140	144.66	8	11858	10	0.0016	33	53	80	97	24	39	60	72	23	36	55	66	
	160	161.36	7	11858	9	0.0015	33	53	80	97	24	39	60	72	23	36	55	66	
	180	183.09	7	11639	8	0.0015	33	53	80	97	24	39	60	72	23	36	55	66	
	200	201.50	6	11858	7	0.0009	33	53	80	97	24	39	60	72	23	36	55	66	
	224	224.75	5	11858	7	0.0009	33	53	80	97	24	39	60	72	23	36	55	66	
	250	255.02	5	11423	6	0.0009	33	53	80	97	24	39	60	72	23	36	55	66	
	280	289.33	4	11858	5	0.0005	33	53	80	97	24	39	60	72	23	36	55	66	
	315	322.71	4	11858	5	0.0005	33	53	80	97	24	39	60	72	23	36	55	66	
	355	366.18	3	11423	4	0.0005	33	53	80	97	24	39	60	72	23	36	55	66	
	400	405.06	3	10996	3	0.0005	33	53	80	97	24	39	60	72	23	36	55	66	
n_1 = 1800 rpm	**31.5**	31.53	57	12301	74	0.0074	43	80	95	138	32	59	70	102	29	55	65	94	E3C (x3)
	35.5	35.17	51	12301	66	0.0071	38	79	95	138	28	59	70	102	26	54	65	94	
	40	39.90	45	11858	56	0.0067	38	79	95	138	28	59	70	102	26	54	65	94	
	45	43.92	41	12078	52	0.0043	38	79	95	138	28	59	70	102	26	54	65	94	
	50	48.98	37	12078	46	0.0041	38	79	95	138	28	59	70	102	26	54	65	94	
	56	55.58	32	11858	40	0.0039	38	79	95	138	28	59	70	102	26	54	65	94	
	63	63.06	29	12078	36	0.0023	38	79	95	138	28	59	70	102	26	54	65	94	
	71	70.33	26	12078	32	0.0022	38	79	95	138	28	59	70	102	26	54	65	94	
	80	79.81	23	11639	27	0.0021	38	79	95	138	28	59	70	102	26	54	65	94	
	90	88.28	20	11208	24	0.0021	38	79	95	138	28	59	70	102	26	54	65	94	
	100	100.75	18	12078	23	0.0032	31	63	76	110	23	47	56	82	21	43	52	75	E4C (x4)
	112	112.37	16	12078	20	0.0031	31	63	76	110	23	47	56	82	21	43	52	75	
	125	127.51	14	11639	17	0.0031	31	63	76	110	23	47	56	82	21	43	52	75	
	140	144.66	12	11858	15	0.0016	31	63	76	110	23	47	56	82	21	43	52	75	
	160	161.36	11	11858	14	0.0015	31	63	76	110	23	47	56	82	21	43	52	75	
	180	183.09	10	11639	12	0.0015	31	63	76	110	23	47	56	82	21	43	52	75	
	200	201.50	9	11858	11	0.0009	31	63	76	110	23	47	56	82	21	43	52	75	
	224	224.75	8	11858	10	0.0009	31	63	76	110	23	47	56	82	21	43	52	75	
	250	255.02	7	11423	8	0.0009	31	63	76	110	23	47	56	82	21	43	52	75	
	280	289.33	6	11858	8	0.0005	31	63	76	110	23	47	56	82	21	43	52	75	
	315	322.71	6	11858	7	0.0005	31	63	76	110	23	47	56	82	21	43	52	75	
	355	366.18	5	11423	6	0.0005	31	63	76	110	23	47	56	82	21	43	52	75	
	400	405.06	4	10996	5	0.0005	31	63	76	110	23	47	56	82	21	43	52	75	

E3C / E4C ...20 — MONOBLOCK HOUSING — 50 Hz — 15 kNm

	i_N	i_{eff}	n_2 [rpm]	T_{2N} [Nm]	P_N [kW]	J [Kgm²]	R1 P_{t0} [kW]	R1	R1 H_2O	R1 +H_2O	S5 P_{t0} [kW]	S5	S5 H_2O	S5 +H_2O	T6 P_{t0} [kW]	T6	T6 H_2O	T6 +H_2O	Type
n_1 = 1000 rpm	**35.5**	36.71	27	13961	40	0.0076	57	69	134	143	42	51	100	106	39	47	92	98	E3C x3
	40	40.94	24	13961	36	0.0072	55	67	134	143	41	50	100	106	38	46	92	98	
	45	46.46	22	13961	31	0.0068	55	66	134	143	41	49	100	106	37	45	92	98	
	50	51.13	20	13961	29	0.0043	47	65	134	143	35	48	100	106	32	44	92	98	
	56	57.03	18	13961	26	0.0042	46	65	134	143	34	48	100	106	32	44	92	98	
	63	64.71	15	13961	23	0.0039	46	65	134	143	34	48	100	106	32	44	92	98	
	71	73.41	14	13689	20	0.0023	46	65	134	143	34	48	100	106	32	44	92	98	
	80	81.88	12	13689	18	0.0022	46	65	134	143	34	48	100	106	32	44	92	98	
	90	92.91	11	13689	15	0.0021	46	65	134	143	34	48	100	106	32	44	92	98	
	100	102.78	10	13152	13	0.0021	46	65	134	143	34	48	100	106	32	44	92	98	
	112	117.29	9	13689	12	0.0032	40	52	108	114	30	38	80	85	27	35	74	78	E4C x4
	125	130.82	8	13689	11	0.0032	39	52	108	114	29	38	80	85	27	35	74	78	
	140	148.44	7	13689	10	0.0031	40	52	108	114	30	38	80	85	27	35	74	78	
	160	168.42	6	13689	9	0.0016	38	52	108	114	28	38	80	85	26	35	74	78	
	180	187.85	5	13689	8	0.0016	38	52	108	114	28	38	80	85	26	35	74	78	
	200	213.15	5	13689	7	0.0015	38	52	108	114	28	38	80	85	26	35	74	78	
	224	234.58	4	13689	6	0.0009	38	52	108	114	28	38	80	85	26	35	74	78	
	250	261.65	4	13689	5	0.0009	38	52	108	114	28	38	80	85	26	35	74	78	
	280	296.89	3	13419	5	0.0009	38	52	108	114	28	38	80	85	26	35	74	78	
	315	336.83	3	13689	4	0.0005	38	52	108	114	28	38	80	85	26	35	74	78	
	355	375.70	3	13689	4	0.0005	38	52	108	114	28	38	80	85	26	35	74	78	
	400	426.30	2	13419	3	0.0005	38	52	108	114	28	38	80	85	26	35	74	78	
	450	471.56	2	12888	3	0.0005	50	64	115	125	37	47	85	93	34	44	78	86	
n_1 = 1500 rpm	**35.5**	36.71	41	13961	60	0.0076	54	91	128	170	40	68	95	126	37	62	87	116	E3C x3
	40	40.94	37	13961	54	0.0072	53	89	128	170	39	66	95	126	36	61	87	116	
	45	46.46	32	13961	47	0.0068	52	88	128	170	39	66	95	126	36	60	87	116	
	50	51.13	29	13961	43	0.0043	45	86	128	170	33	64	95	126	30	59	87	116	
	56	57.03	26	13961	38	0.0042	44	86	128	170	33	64	95	126	30	59	87	116	
	63	64.71	23	13961	34	0.0039	44	86	128	170	33	64	95	126	30	59	87	116	
	71	73.41	20	13689	29	0.0023	44	86	128	170	33	64	95	126	30	59	87	116	
	80	81.88	18	13689	26	0.0022	44	86	128	170	33	64	95	126	30	59	87	116	
	90	92.91	16	13689	23	0.0021	44	86	128	170	33	64	95	126	30	59	87	116	
	100	102.78	15	13152	20	0.0021	44	86	128	170	33	64	95	126	30	59	87	116	
	112	117.29	13	13689	18	0.0032	38	69	103	136	28	51	77	101	26	47	70	93	E4C x4
	125	130.82	11	13689	16	0.0032	37	69	103	136	28	51	77	101	25	47	70	93	
	140	148.44	10	13689	14	0.0031	38	69	103	136	28	51	77	101	26	47	70	93	
	160	168.42	9	13689	13	0.0016	36	69	103	136	27	51	77	101	25	47	70	93	
	180	187.85	8	13689	11	0.0016	36	69	103	136	27	51	77	101	25	47	70	93	
	200	213.15	7	13689	10	0.0015	36	69	103	136	27	51	77	101	25	47	70	93	
	224	234.58	6	13689	9	0.0009	36	69	103	136	27	51	77	101	25	47	70	93	
	250	261.65	6	13689	8	0.0009	36	69	103	136	27	51	77	101	25	47	70	93	
	280	296.89	5	13419	7	0.0009	36	69	103	136	27	51	77	101	25	47	70	93	
	315	336.83	4	13689	6	0.0005	36	69	103	136	27	51	77	101	25	47	70	93	
	355	375.70	4	13689	6	0.0005	36	69	103	136	27	51	77	101	25	47	70	93	
	400	426.30	4	13419	5	0.0005	36	69	103	136	27	51	77	101	25	47	70	93	
	450	471.56	3	12888	4	0.0005	48	85	109	149	36	63	81	111	33	58	75	102	

E3C / E4C ...20 — MONOBLOCK HOUSING — 60 Hz — 15 kNm

	i_N	i_{eff}	n_2 [rpm]	T_{2N} [Nm]	P_N [kW]	J [Kgm²]	R1 P_{t0} [kW]	R1	R1 H_2O	R1 $+H_2O$	S5 P_{t0} [kW]	S5	S5 H_2O	S5 $+H_2O$	T6 P_{t0} [kW]	T6	T6 H_2O	T6 $+H_2O$	Type
n_1 = 1200 rpm	**35.5**	36.71	33	13961	48	0.0076	56	79	132	153	41	58	98	114	38	54	90	104	E3C (x3)
	40	40.94	29	13961	43	0.0072	54	77	132	153	40	57	98	114	37	52	90	104	
	45	46.46	26	13961	38	0.0068	54	76	132	153	40	56	98	114	37	52	90	104	
	50	51.13	23	13961	34	0.0043	46	74	132	153	34	55	98	114	31	51	90	104	
	56	57.03	21	13961	31	0.0042	45	74	132	153	34	55	98	114	31	51	90	104	
	63	64.71	19	13961	27	0.0039	45	74	132	153	34	55	98	114	31	51	90	104	
	71	73.41	16	13689	23	0.0023	45	74	132	153	34	55	98	114	31	51	90	104	
	80	81.88	15	13689	21	0.0022	45	74	132	153	34	55	98	114	31	51	90	104	
	90	92.91	13	13689	19	0.0021	45	74	132	153	34	55	98	114	31	51	90	104	
	100	102.78	12	13152	16	0.0021	45	74	132	153	34	55	98	114	31	51	90	104	
	112	117.29	10	13689	15	0.0032	39	59	106	122	29	44	79	91	27	40	72	84	E4C (x4)
	125	130.82	9	13689	13	0.0032	38	59	106	122	29	44	79	91	26	40	72	84	
	140	148.44	8	13689	12	0.0031	39	59	106	122	29	44	79	91	27	40	72	84	
	160	168.42	7	13689	10	0.0016	37	59	106	122	28	44	79	91	25	40	72	84	
	180	187.85	6	13689	9	0.0016	37	59	106	122	28	44	79	91	25	40	72	84	
	200	213.15	6	13689	8	0.0015	37	59	106	122	28	44	79	91	25	40	72	84	
	224	234.58	5	13689	7	0.0009	37	59	106	122	28	44	79	91	25	40	72	84	
	250	261.65	5	13689	7	0.0009	37	59	106	122	28	44	79	91	25	40	72	84	
	280	296.89	4	13419	6	0.0009	37	59	106	122	28	44	79	91	25	40	72	84	
	315	336.83	4	13689	5	0.0005	37	59	106	122	28	44	79	91	25	40	72	84	
	355	375.70	3	13689	5	0.0005	37	59	106	122	28	44	79	91	25	40	72	84	
	400	426.30	3	13419	4	0.0005	37	59	106	122	28	44	79	91	25	40	72	84	
	450	471.56	3	12888	3	0.0005	49	73	113	134	37	54	84	100	34	50	77	92	
n_1 = 1800 rpm	**35.5**	36.71	49	13961	72	0.0076	52	94	124	173	39	70	92	129	36	64	85	118	E3C (x3)
	40	40.94	44	13961	64	0.0072	51	92	124	173	38	68	92	129	35	63	85	118	
	45	46.46	39	13961	57	0.0068	50	91	124	173	37	67	92	129	34	62	85	118	
	50	51.13	35	13961	51	0.0043	43	89	124	173	32	66	92	129	30	61	85	118	
	56	57.03	32	13961	46	0.0042	43	89	124	173	32	66	92	129	29	61	85	118	
	63	64.71	28	13961	41	0.0039	43	89	124	173	32	66	92	129	29	61	85	118	
	71	73.41	25	13689	35	0.0023	43	89	124	173	32	66	92	129	29	61	85	118	
	80	81.88	22	13689	32	0.0022	43	89	124	173	32	66	92	129	29	61	85	118	
	90	92.91	19	13689	28	0.0021	43	89	124	173	32	66	92	129	29	61	85	118	
	100	102.78	18	13152	24	0.0021	43	89	124	173	32	66	92	129	29	61	85	118	
	112	117.29	15	13689	22	0.0032	37	71	100	139	27	53	74	103	25	48	68	95	E4C (x4)
	125	130.82	14	13689	20	0.0032	36	71	100	139	27	53	74	103	25	48	68	95	
	140	148.44	12	13689	17	0.0031	37	71	100	139	27	53	74	103	25	48	68	95	
	160	168.42	11	13689	15	0.0016	35	71	100	139	26	53	74	103	24	48	68	95	
	180	187.85	10	13689	14	0.0016	35	71	100	139	26	53	74	103	24	48	68	95	
	200	213.15	8	13689	12	0.0015	35	71	100	139	26	53	74	103	24	48	68	95	
	224	234.58	8	13689	11	0.0009	35	71	100	139	26	53	74	103	24	48	68	95	
	250	261.65	7	13689	10	0.0009	35	71	100	139	26	53	74	103	24	48	68	95	
	280	296.89	6	13419	9	0.0009	35	71	100	139	26	53	74	103	24	48	68	95	
	315	336.83	5	13689	8	0.0005	35	71	100	139	26	53	74	103	24	48	68	95	
	355	375.70	5	13689	7	0.0005	35	71	100	139	26	53	74	103	24	48	68	95	
	400	426.30	4	13419	6	0.0005	35	71	100	139	26	53	74	103	24	48	68	95	
	450	471.56	4	12888	5	0.0005	47	88	106	152	35	65	79	113	32	60	72	104	

E3C / E4C ...22 — MONOBLOCK HOUSING — 50 Hz — 20 kNm

	i_N	i_{eff}	n_2 [rpm]	T_{2N} [Nm]	P_N [kW]	J [Kgm²]	R1 P_{t0} [kW]	R1	R1 H_2O	R1 +H_2O	S5 P_{t0} [kW]	S5	S5 H_2O	S5 +H_2O	T6 P_{t0} [kW]	T6	T6 H_2O	T6 +H_2O	Type
n_1 = 1000 rpm	**25**	25.14	40	19413	81	0.0264	64	84	145	159	47	63	108	118	44	58	99	108	E3C x3
	28	28.04	36	19413	73	0.0258	67	84	145	159	50	63	108	118	46	57	99	108	
	31.5	31.43	32	18837	63	0.0248	60	79	145	159	44	59	108	118	41	54	99	108	
	35.5	35.02	29	19413	58	0.0151	57	79	145	159	42	59	108	118	39	54	99	108	
	40	39.06	26	19413	52	0.0148	57	79	145	192	42	59	108	143	39	54	99	131	
	45	43.78	23	18837	45	0.0143	57	79	145	159	42	59	108	118	39	54	99	108	
	50	50.29	20	19038	40	0.0081	57	79	145	159	42	59	108	118	39	54	99	108	
	56	56.09	18	19038	36	0.0080	57	79	145	159	42	59	108	118	39	54	99	108	
	63	62.86	16	18837	31	0.0077	57	79	145	159	42	59	108	118	39	54	99	108	
	71	69.14	14	19038	29	0.0076	57	79	145	159	42	59	108	118	39	54	99	108	
	80	75.43	13	19038	26	0.0134	46	63	97	127	34	47	72	94	32	43	66	87	E4C x4
	90	84.13	12	19038	24	0.0133	46	63	97	127	34	47	72	94	31	43	66	87	
	100	94.29	11	18667	21	0.0132	45	63	97	127	34	47	72	94	31	43	66	87	
	112	108.31	9	19038	18	0.0069	45	63	97	127	34	47	72	94	31	43	66	87	
	125	120.80	8	19038	17	0.0069	45	63	97	127	34	47	72	94	31	43	66	87	
	140	135.38	7	18667	14	0.0068	45	63	97	127	34	47	72	94	31	43	66	87	
	160	150.86	7	19038	13	0.0040	45	63	97	127	34	47	72	94	31	43	66	87	
	180	168.26	6	18667	12	0.0040	45	63	97	127	34	47	72	94	31	43	66	87	
	200	188.57	5	18667	10	0.0040	45	63	97	127	34	47	72	94	31	43	66	87	
	224	216.62	5	18667	9	0.0022	45	63	97	127	34	47	72	94	31	43	66	87	
	250	241.61	4	18667	8	0.0021	45	63	97	127	34	47	72	94	31	43	66	87	
	280	270.77	4	18667	7	0.0021	45	63	97	127	34	47	72	94	31	43	66	87	
	315	297.85	3	18299	6	0.0021	45	63	97	127	34	47	72	94	31	43	66	87	
n_1 = 1500 rpm	**25**	25.14	60	19413	121	0.0264	61	112	138	189	45	84	103	140	42	77	94	129	E3C x3
	28	28.04	53	19413	109	0.0258	64	112	138	189	48	83	103	140	44	77	94	129	
	31.5	31.43	48	18837	94	0.0248	57	105	138	189	42	78	103	140	39	72	94	129	
	35.5	35.02	43	19413	87	0.0151	54	105	138	189	40	78	103	140	37	72	94	129	
	40	39.06	38	19413	78	0.0148	54	105	138	229	40	78	103	170	37	72	94	156	
	45	43.78	34	18837	68	0.0143	54	105	138	189	40	78	103	140	37	72	94	129	
	50	50.29	30	19038	59	0.0081	54	105	138	189	40	78	103	140	37	72	94	129	
	56	56.09	27	19038	53	0.0080	54	105	138	189	40	78	103	140	37	72	94	129	
	63	62.86	24	18837	47	0.0077	54	105	138	189	40	78	103	140	37	72	94	129	
	71	69.14	22	19038	43	0.0076	54	105	138	189	40	78	103	140	37	72	94	129	
	80	75.43	20	19038	40	0.0134	44	84	92	151	33	62	68	112	30	57	63	103	E4C x4
	90	84.13	18	19038	36	0.0133	43	84	92	151	32	62	68	112	30	57	63	103	
	100	94.29	16	18667	31	0.0132	43	84	92	151	32	62	68	112	29	57	63	103	
	112	108.31	14	19038	28	0.0069	43	84	92	151	32	62	68	112	29	57	63	103	
	125	120.80	12	19038	25	0.0069	43	84	92	151	32	62	68	112	29	57	63	103	
	140	135.38	11	18667	22	0.0068	43	84	92	151	32	62	68	112	29	57	63	103	
	160	150.86	10	19038	20	0.0040	43	84	92	151	32	62	68	112	29	57	63	103	
	180	168.26	9	18667	17	0.0040	43	84	92	151	32	62	68	112	29	57	63	103	
	200	188.57	8	18667	16	0.0040	43	84	92	151	32	62	68	112	29	57	63	103	
	224	216.62	7	18667	14	0.0022	43	84	92	151	32	62	68	112	29	57	63	103	
	250	241.61	6	18667	12	0.0021	43	84	92	151	32	62	68	112	29	57	63	103	
	280	270.77	6	18667	11	0.0021	43	84	92	151	32	62	68	112	29	57	63	103	
	315	297.85	5	18299	10	0.0021	43	84	92	151	32	62	68	112	29	57	63	103	

E3C / E4C ...22 — MONOBLOCK HOUSING — 60 Hz — 20 kNm

	i_N	i_{eff}	n_2 [rpm]	T_{2N} [Nm]	P_N [kW]	J [Kgm²]	R1 P_{t0} [kW]	R1	R1 H_2O	R1 +H_2O	S5 P_{t0} [kW]	S5	S5 H_2O	S5 +H_2O	T6 P_{t0} [kW]	T6	T6 H_2O	T6 +H_2O	Type
n_1 = 1200 rpm	**25**	25.14	48	19413	97	0.0264	63	97	142	170	47	72	106	126	43	66	97	116	E3C (x3)
	28	28.04	43	19413	87	0.0258	66	96	142	170	49	72	106	126	45	66	97	116	
	31.5	31.43	38	18837	75	0.0248	59	91	142	170	44	67	106	126	40	62	97	116	
	35.5	35.02	34	19413	70	0.0151	56	90	142	170	41	67	106	126	38	62	97	116	
	40	39.06	31	19413	62	0.0148	56	90	142	206	41	67	106	153	38	62	97	141	
	45	43.78	27	18837	54	0.0143	56	90	142	170	41	67	106	126	38	62	97	116	
	50	50.29	24	19038	48	0.0081	56	90	142	170	41	67	106	126	38	62	97	116	
	56	56.09	21	19038	43	0.0080	56	90	142	170	41	67	106	126	38	62	97	116	
	63	62.86	19	18837	38	0.0077	56	90	142	170	41	67	106	126	38	62	97	116	
	71	69.14	17	19038	35	0.0076	56	90	142	170	41	67	106	126	38	62	97	116	
	80	75.43	16	19038	32	0.0134	45	72	95	136	34	54	70	101	31	49	65	93	E4C (x4)
	90	84.13	14	19038	28	0.0133	45	72	95	136	33	54	70	101	31	49	65	93	
	100	94.29	13	18667	25	0.0132	44	72	95	136	33	54	70	101	30	49	65	93	
	112	108.31	11	19038	22	0.0069	44	72	95	136	33	54	70	101	30	49	65	93	
	125	120.80	10	19038	20	0.0069	44	72	95	136	33	54	70	101	30	49	65	93	
	140	135.38	9	18667	17	0.0068	44	72	95	136	33	54	70	101	30	49	65	93	
	160	150.86	8	19038	16	0.0040	44	72	95	136	33	54	70	101	30	49	65	93	
	180	168.26	7	18667	14	0.0040	44	72	95	136	33	54	70	101	30	49	65	93	
	200	188.57	6	18667	12	0.0040	44	72	95	136	33	54	70	101	30	49	65	93	
	224	216.62	6	18667	11	0.0022	44	72	95	136	33	54	70	101	30	49	65	93	
	250	241.61	5	18667	10	0.0021	44	72	95	136	33	54	70	101	30	49	65	93	
	280	270.77	4	18667	9	0.0021	44	72	95	136	33	54	70	101	30	49	65	93	
	315	297.85	4	18299	8	0.0021	44	72	95	136	33	54	70	101	30	49	65	93	
n_1 = 1800 rpm	**25**	25.14	72	19413	146	0.0264	59	116	134	193	44	86	99	143	40	79	91	132	E3C (x3)
	28	28.04	64	19413	131	0.0258	62	116	134	193	46	86	99	143	43	79	91	132	
	31.5	31.43	57	18837	113	0.0248	55	109	134	193	41	81	99	143	38	74	91	132	
	35.5	35.02	51	19413	104	0.0151	52	108	134	193	39	80	99	143	36	74	91	132	
	40	39.06	46	19413	94	0.0148	52	108	134	234	39	80	99	173	36	74	91	159	
	45	43.78	41	18837	81	0.0143	52	108	134	193	39	80	99	143	36	74	91	132	
	50	50.29	36	19038	71	0.0081	52	108	134	193	39	80	99	143	36	74	91	132	
	56	56.09	32	19038	64	0.0080	52	108	134	193	39	80	99	143	36	74	91	132	
	63	62.86	29	18837	56	0.0077	52	108	134	193	39	80	99	143	36	74	91	132	
	71	69.14	26	19038	52	0.0076	52	108	134	193	39	80	99	143	36	74	91	132	
	80	75.43	24	19038	48	0.0134	43	87	89	154	32	64	66	115	29	59	61	105	E4C (x4)
	90	84.13	21	19038	43	0.0133	42	87	89	154	31	64	66	115	29	59	61	105	
	100	94.29	19	18667	37	0.0132	42	87	89	154	31	64	66	115	28	59	61	105	
	112	108.31	17	19038	33	0.0069	42	87	89	154	31	64	66	115	28	59	61	105	
	125	120.80	15	19038	30	0.0069	42	87	89	154	31	64	66	115	28	59	61	105	
	140	135.38	13	18667	26	0.0068	42	87	89	154	31	64	66	115	28	59	61	105	
	160	150.86	12	19038	24	0.0040	42	87	89	154	31	64	66	115	28	59	61	105	
	180	168.26	11	18667	21	0.0040	42	87	89	154	31	64	66	115	28	59	61	105	
	200	188.57	10	18667	19	0.0040	42	87	89	154	31	64	66	115	28	59	61	105	
	224	216.62	8	18667	16	0.0022	42	87	89	154	31	64	66	115	28	59	61	105	
	250	241.61	7	18667	15	0.0021	42	87	89	154	31	64	66	115	28	59	61	105	
	280	270.77	7	18667	13	0.0021	42	87	89	154	31	64	66	115	28	59	61	105	
	315	297.85	6	18299	12	0.0021	42	87	89	154	31	64	66	115	28	59	61	105	

E3C / E4C ...25 — MONOBLOCK HOUSING — 50 Hz — 30 kNm

	i_N	i_{eff}	n_2 [rpm]	T_{2N} [Nm]	P_N [kW]	J [Kgm²]	R1 P_{t0} [kW]	R1	R1 H_2O	R1 +H_2O	S5 P_{t0} [kW]	S5	S5 H_2O	S5 +H_2O	T6 P_{t0} [kW]	T6	T6 H_2O	T6 +H_2O	Type
n_1 = 1000 rpm	**31.5**	34.29	29	28556	87	0.0275	82	106	236	240	61	79	176	178	56	72	161	164	E3C x3
	35.5	38.24	26	28020	77	0.0266	82	104	236	240	61	77	176	178	56	71	161	164	
	40	42.86	23	25629	63	0.0255	74	97	236	240	55	72	176	178	51	66	161	164	
	45	47.76	21	28556	63	0.0157	69	95	236	240	51	70	176	178	47	65	161	164	
	50	53.27	19	27489	54	0.0152	69	95	236	240	51	70	176	178	47	65	161	164	
	56	59.69	17	25629	45	0.0146	68	95	236	240	51	70	176	178	47	65	161	164	
	63	68.57	15	28556	44	0.0084	68	95	236	240	51	70	176	178	47	65	161	164	
	71	76.48	13	27489	38	0.0082	68	95	236	240	51	70	176	178	47	65	161	164	
	80	85.71	12	25629	31	0.0079	68	95	236	240	51	70	176	178	47	65	161	164	
	90	94.29	11	25926	29	0.0078	68	95	236	240	51	70	176	178	47	65	161	164	
	100	102.86	10	28020	29	0.0135	57	76	189	192	42	56	140	143	39	52	129	131	E4C x4
	112	114.73	9	27489	25	0.0134	56	76	189	192	41	56	140	143	38	52	129	131	
	125	128.57	8	25415	21	0.0133	55	76	189	192	41	56	140	143	37	52	129	131	
	140	147.92	7	24600	18	0.0069	55	76	189	192	41	56	140	143	37	52	129	131	
	160	164.73	6	26963	17	0.0069	55	76	189	192	41	56	140	143	37	52	129	131	
	180	184.62	5	25415	14	0.0069	55	76	189	192	41	56	140	143	37	52	129	131	
	200	205.71	5	28020	14	0.0040	55	76	189	192	41	56	140	143	37	52	129	131	
	224	229.45	4	26963	12	0.0040	55	76	189	192	41	56	140	143	37	52	129	131	
	250	257.14	4	25415	10	0.0040	55	76	189	192	41	56	140	143	37	52	129	131	
	280	295.38	3	28020	10	0.0022	55	76	189	192	41	56	140	143	37	52	129	131	
	315	329.47	3	26963	9	0.0022	55	76	189	192	41	56	140	143	37	52	129	131	
	355	369.23	3	25415	7	0.0021	55	76	189	192	41	56	140	143	37	52	129	131	
	400	406.15	2	25415	7	0.0021	55	76	189	192	41	56	140	143	37	52	129	131	
n_1 = 1500 rpm	**31.5**	34.29	44	28556	131	0.0275	78	141	225	286	58	105	167	212	53	96	154	195	E3C x3
	35.5	38.24	39	28020	115	0.0266	79	139	225	286	58	103	167	212	54	95	154	195	
	40	42.86	35	25629	94	0.0255	71	129	225	286	53	96	167	212	48	88	154	195	
	45	47.76	31	28556	94	0.0157	66	126	225	286	49	94	167	212	45	86	154	195	
	50	53.27	28	27489	81	0.0152	65	126	225	286	48	94	167	212	45	86	154	195	
	56	59.69	25	25629	67	0.0146	65	126	225	286	48	94	167	212	44	86	154	195	
	63	68.57	22	28556	65	0.0084	65	126	225	286	48	94	167	212	44	86	154	195	
	71	76.48	20	27489	56	0.0082	65	126	225	286	48	94	167	212	44	86	154	195	
	80	85.71	18	25629	47	0.0079	65	126	225	286	48	94	167	212	44	86	154	195	
	90	94.29	16	25926	43	0.0078	65	126	225	286	48	94	167	212	44	86	154	195	
	100	102.86	15	28020	43	0.0135	54	101	180	229	40	75	134	170	37	69	123	156	E4C x4
	112	114.73	13	27489	38	0.0134	53	101	180	229	39	75	134	170	36	69	123	156	
	125	128.57	12	25415	31	0.0133	52	101	180	229	39	75	134	170	36	69	123	156	
	140	147.92	11	24600	28	0.0069	52	101	180	229	39	75	134	170	36	69	123	156	
	160	164.73	9	26963	26	0.0069	52	101	180	229	39	75	134	170	36	69	123	156	
	180	184.62	8	25415	22	0.0069	52	101	180	229	39	75	134	170	36	69	123	156	
	200	205.71	7	28020	21	0.0040	52	101	180	229	39	75	134	170	36	69	123	156	
	224	229.45	7	26963	18	0.0040	52	101	180	229	39	75	134	170	36	69	123	156	
	250	257.14	6	25415	16	0.0040	52	101	180	229	39	75	134	170	36	69	123	156	
	280	295.38	5	28020	15	0.0022	52	101	180	229	39	75	134	170	36	69	123	156	
	315	329.47	5	26963	13	0.0022	52	101	180	229	39	75	134	170	36	69	123	156	
	355	369.23	4	25415	11	0.0021	52	101	180	229	39	75	134	170	36	69	123	156	
	400	406.15	4	25415	10	0.0021	52	101	180	229	39	75	134	170	36	69	123	156	

E3C / E4C ...25 — MONOBLOCK HOUSING — 60 Hz — 30 kNm

	i_N	i_{eff}	n_2 [rpm]	T_{2N} [Nm]	P_N [kW]	J [Kgm²]	R1 P_{t0} [kW]	R1	R1 H_2O	R1 $+H_2O$	S5 P_{t0} [kW]	S5	S5 H_2O	S5 $+H_2O$	T6 P_{t0} [kW]	T6	T6 H_2O	T6 $+H_2O$	Type
n_1 = 1200 rpm	**31.5**	34.29	35	28556	105	0.0275	81	121	232	257	60	90	172	191	55	83	158	176	E3C (x3)
	35.5	38.24	31	28020	92	0.0266	81	119	232	257	60	89	172	191	55	82	158	176	
	40	42.86	28	25629	75	0.0255	73	111	232	257	54	82	172	191	50	76	158	176	
	45	47.76	25	28556	75	0.0157	68	108	232	257	50	81	172	191	46	74	158	176	
	50	53.27	23	27489	65	0.0152	67	108	232	257	50	81	172	191	46	74	158	176	
	56	59.69	20	25629	54	0.0146	67	108	232	257	50	81	172	191	46	74	158	176	
	63	68.57	18	28556	52	0.0084	67	108	232	257	50	81	172	191	46	74	158	176	
	71	76.48	16	27489	45	0.0082	67	108	232	257	50	81	172	191	46	74	158	176	
	80	85.71	14	25629	38	0.0079	67	108	232	257	50	81	172	191	46	74	158	176	
	90	94.29	13	25926	35	0.0078	67	108	232	257	50	81	172	191	46	74	158	176	
	100	102.86	12	28020	34	0.0135	56	87	185	206	41	64	138	153	38	59	127	141	E4C (x4)
	112	114.73	10	27489	30	0.0134	55	87	185	206	41	64	138	153	37	59	127	141	
	125	128.57	9	25415	25	0.0133	54	87	185	206	40	64	138	153	37	59	127	141	
	140	147.92	9	24600	22	0.0069	54	87	185	206	40	64	138	153	37	59	127	141	
	160	164.73	7	26963	21	0.0069	54	87	185	206	40	64	138	153	37	59	127	141	
	180	184.62	6	25415	17	0.0069	54	87	185	206	40	64	138	153	37	59	127	141	
	200	205.71	6	28020	17	0.0040	54	87	185	206	40	64	138	153	37	59	127	141	
	224	229.45	5	26963	15	0.0040	54	87	185	206	40	64	138	153	37	59	127	141	
	250	257.14	5	25415	12	0.0040	54	87	185	206	40	64	138	153	37	59	127	141	
	280	295.38	4	28020	12	0.0022	54	87	185	206	40	64	138	153	37	59	127	141	
	315	329.47	4	26963	10	0.0022	54	87	185	206	40	64	138	153	37	59	127	141	
	355	369.23	3	25415	9	0.0021	54	87	185	206	40	64	138	153	37	59	127	141	
	400	406.15	3	25415	8	0.0021	54	87	185	206	40	64	138	153	37	59	127	141	
n_1 = 1800 rpm	**31.5**	34.29	52	28556	157	0.0275	76	145	218	292	56	108	162	217	52	99	149	199	E3C (x3)
	35.5	38.24	47	28020	138	0.0266	76	143	218	292	57	106	162	217	52	98	149	199	
	40	42.86	42	25629	113	0.0255	69	133	218	292	51	99	162	217	47	91	149	199	
	45	47.76	38	28556	113	0.0157	64	130	218	292	47	96	162	217	44	89	149	199	
	50	53.27	34	27489	97	0.0152	63	130	218	292	47	96	162	217	43	89	149	199	
	56	59.69	30	25629	81	0.0146	63	130	218	292	47	96	162	217	43	89	149	199	
	63	68.57	26	28556	78	0.0084	63	130	218	292	47	96	162	217	43	89	149	199	
	71	76.48	24	27489	68	0.0082	63	130	218	292	47	96	162	217	43	89	149	199	
	80	85.71	21	25629	56	0.0079	63	130	218	292	47	96	162	217	43	89	149	199	
	90	94.29	19	25926	52	0.0078	63	130	218	292	47	96	162	217	43	89	149	199	
	100	102.86	17	28020	51	0.0135	52	104	175	233	39	77	130	173	36	71	119	159	E4C (x4)
	112	114.73	16	27489	45	0.0134	51	104	175	233	38	77	130	173	35	71	119	159	
	125	128.57	14	25415	37	0.0133	50	104	175	233	37	77	130	173	34	71	119	159	
	140	147.92	13	24600	33	0.0069	50	104	175	233	37	77	130	173	34	71	119	159	
	160	164.73	11	26963	31	0.0069	50	104	175	233	37	77	130	173	34	71	119	159	
	180	184.62	10	25415	26	0.0069	50	104	175	233	37	77	130	173	34	71	119	159	
	200	205.71	9	28020	26	0.0040	50	104	175	233	37	77	130	173	34	71	119	159	
	224	229.45	8	26963	22	0.0040	50	104	175	233	37	77	130	173	34	71	119	159	
	250	257.14	7	25415	19	0.0040	50	104	175	233	37	77	130	173	34	71	119	159	
	280	295.38	6	28020	18	0.0022	50	104	175	233	37	77	130	173	34	71	119	159	
	315	329.47	5	26963	15	0.0022	50	104	175	233	37	77	130	173	34	71	119	159	
	355	369.23	5	25415	13	0.0021	50	104	175	233	37	77	130	173	34	71	119	159	
	400	406.15	4	25415	12	0.0021	50	104	175	233	37	77	130	173	34	71	119	159	

E3C / E4C ...26 — MONOBLOCK HOUSING — 50 Hz — 36 kNm

	i_N	i_{eff}	n_2 [rpm]	T_{2N} [Nm]	P_N [kW]	J [Kgm²]	R1 P_{t0} [kW]	R1	R1 H_2O	R1 +H_2O	S5 P_{t0} [kW]	S5	S5 H_2O	S5 +H_2O	T6 P_{t0} [kW]	T6	T6 H_2O	T6 +H_2O	Type
n_1 = 1000 rpm	**25**	25.60	39	35672	146	0.0659	95	136	205	228	71	101	152	169	65	93	140	156	E3C x3
	28	28.55	35	35672	131	0.0639	89	127	205	224	66	95	152	167	61	87	140	153	
	31.5	32.46	31	35672	115	0.0605	89	125	205	224	66	93	152	167	61	85	140	153	
	35.5	35.66	28	35672	105	0.0380	83	114	205	224	62	85	152	167	57	78	140	153	
	40	39.77	25	35672	94	0.0370	83	112	205	224	62	83	152	167	57	76	140	153	
	45	45.21	22	35672	83	0.0352	81	112	205	224	60	83	152	167	55	76	140	153	
	50	51.20	20	35672	73	0.0204	81	112	205	224	60	83	152	167	55	76	140	153	
	56	57.11	18	35027	64	0.0199	81	112	205	224	60	83	152	167	55	76	140	153	
	63	64.91	15	35027	57	0.0190	81	112	205	224	60	83	152	167	55	76	140	153	
	71	72.86	14	35027	50	0.0187	81	112	205	224	60	83	152	167	55	76	140	153	
	80	80.82	12	35027	45	0.0164	73	94	164	179	54	70	122	133	50	64	112	123	E4C x4
	90	90.15	11	35027	41	0.0162	69	89	164	179	52	66	122	133	47	61	112	123	
	100	102.47	10	35027	36	0.0159	68	89	164	179	50	66	122	133	46	61	112	123	
	112	116.05	9	35027	32	0.0084	67	89	164	179	50	66	122	133	46	61	112	123	
	125	129.44	8	35027	28	0.0083	64	89	164	179	48	66	122	133	44	61	112	123	
	140	147.14	7	35027	25	0.0081	64	89	164	179	48	66	122	133	44	61	112	123	
	160	161.65	6	35027	23	0.0048	64	89	164	179	48	66	122	133	44	61	112	123	
	180	180.30	6	35027	20	0.0047	64	89	164	179	48	66	122	133	44	61	112	123	
	200	204.94	5	35027	18	0.0046	64	89	164	179	48	66	122	133	44	61	112	123	
	224	232.11	4	34387	16	0.0025	64	89	164	179	48	66	122	133	44	61	112	123	
	250	258.60	4	34387	14	0.0025	64	89	164	179	48	66	122	133	44	61	112	123	
	280	294.28	3	34387	12	0.0025	64	89	164	179	48	66	122	133	44	61	112	123	
	315	330.31	3	34387	11	0.0024	64	89	164	179	48	66	122	133	44	61	112	123	
n_1 = 1500 rpm	**25**	25.60	59	35672	219	0.0659	91	181	195	271	67	134	145	201	62	123	133	185	E3C x3
	28	28.55	53	35672	196	0.0639	85	170	195	267	63	126	145	198	58	116	133	182	
	31.5	32.46	46	35672	173	0.0605	84	167	195	267	63	124	145	198	58	114	133	182	
	35.5	35.66	42	35672	157	0.0380	79	152	195	267	59	113	145	198	54	104	133	182	
	40	39.77	38	35672	141	0.0370	79	149	195	267	59	111	145	198	54	102	133	182	
	45	45.21	33	35672	124	0.0352	77	149	195	267	57	111	145	198	53	102	133	182	
	50	51.20	29	35672	109	0.0204	77	149	195	267	57	111	145	198	53	102	133	182	
	56	57.11	26	35027	96	0.0199	77	149	195	267	57	111	145	198	53	102	133	182	
	63	64.91	23	35027	85	0.0190	77	149	195	267	57	111	145	198	53	102	133	182	
	71	72.86	21	35027	76	0.0187	77	149	195	267	57	111	145	198	53	102	133	182	
	80	80.82	19	35027	68	0.0164	70	125	156	214	52	93	116	159	48	86	107	146	E4C x4
	90	90.15	17	35027	61	0.0162	66	119	156	214	49	89	116	159	45	81	107	146	
	100	102.47	15	35027	54	0.0159	65	119	156	214	48	89	116	159	44	81	107	146	
	112	116.05	13	35027	47	0.0084	63	119	156	214	47	89	116	159	43	81	107	146	
	125	129.44	12	35027	43	0.0083	61	119	156	214	45	89	116	159	42	81	107	146	
	140	147.14	10	35027	37	0.0081	61	119	156	214	45	89	116	159	42	81	107	146	
	160	161.65	9	35027	34	0.0048	61	119	156	214	45	89	116	159	42	81	107	146	
	180	180.30	8	35027	31	0.0047	61	119	156	214	45	89	116	159	42	81	107	146	
	200	204.94	7	35027	27	0.0046	61	119	156	214	45	89	116	159	42	81	107	146	
	224	232.11	6	34387	23	0.0025	61	119	156	214	45	89	116	159	42	81	107	146	
	250	258.60	6	34387	22	0.0025	61	119	156	214	45	89	116	159	42	81	107	146	
	280	294.28	5	34387	18	0.0025	61	119	156	214	45	89	116	159	42	81	107	146	
	315	330.31	5	34387	16	0.0024	61	119	156	214	45	89	116	159	42	81	107	146	

E3C / E4C ...26 — MONOBLOCK HOUSING — 60 Hz — 36 kNm

	i_N	i_{eff}	n_2 [rpm]	T_{2N} [Nm]	P_N [kW]	J [Kgm²]	R1 P_{t0} [kW]	R1	R1 H_2O	R1 $+H_2O$	S5 P_{t0} [kW]	S5	S5 H_2O	S5 $+H_2O$	T6 P_{t0} [kW]	T6	T6 H_2O	T6 $+H_2O$	Type
n_1 = 1200 rpm	**25**	25.60	47	35672	175	0.0659	93	155	201	244	69	115	149	181	64	106	137	167	E3C (x3)
	28	28.55	42	35672	157	0.0639	88	146	201	240	65	108	149	179	60	100	137	164	
	31.5	32.46	37	35672	138	0.0605	87	143	201	240	65	106	149	179	59	98	137	164	
	35.5	35.66	34	35672	126	0.0380	82	131	201	240	61	97	149	179	56	89	137	164	
	40	39.77	30	35672	113	0.0370	81	128	201	240	60	95	149	179	55	88	137	164	
	45	45.21	27	35672	99	0.0352	79	128	201	240	59	95	149	179	54	88	137	164	
	50	51.20	23	35672	88	0.0204	79	128	201	240	59	95	149	179	54	88	137	164	
	56	57.11	21	35027	77	0.0199	79	128	201	240	59	95	149	179	54	88	137	164	
	63	64.91	18	35027	68	0.0190	79	128	201	240	59	95	149	179	54	88	137	164	
	71	72.86	16	35027	60	0.0187	79	128	201	240	59	95	149	179	54	88	137	164	
	80	80.82	15	35027	54	0.0164	72	108	161	192	53	80	119	143	49	74	110	131	E4C (x4)
	90	90.15	13	35027	49	0.0162	68	103	161	192	51	76	119	143	46	70	110	131	
	100	102.47	12	35027	43	0.0159	67	103	161	192	50	76	119	143	46	70	110	131	
	112	116.05	10	35027	38	0.0084	65	103	161	192	49	76	119	143	45	70	110	131	
	125	129.44	9	35027	34	0.0083	63	103	161	192	47	76	119	143	43	70	110	131	
	140	147.14	8	35027	30	0.0081	63	103	161	192	47	76	119	143	43	70	110	131	
	160	161.65	7	35027	27	0.0048	63	103	161	192	47	76	119	143	43	70	110	131	
	180	180.30	7	35027	24	0.0047	63	103	161	192	47	76	119	143	43	70	110	131	
	200	204.94	6	35027	21	0.0046	63	103	161	192	47	76	119	143	43	70	110	131	
	224	232.11	5	34387	19	0.0025	63	103	161	192	47	76	119	143	43	70	110	131	
	250	258.60	5	34387	17	0.0025	63	103	161	192	47	76	119	143	43	70	110	131	
	280	294.28	4	34387	15	0.0025	63	103	161	192	47	76	119	143	43	70	110	131	
	315	330.31	4	34387	13	0.0024	63	103	161	192	47	76	119	143	43	70	110	131	
n_1 = 1800 rpm	**25**	25.60	70	35672	263	0.0659	88	186	189	277	65	138	141	205	60	127	129	189	E3C (x3)
	28	28.55	63	35672	236	0.0639	82	175	189	272	61	130	141	202	56	119	129	186	
	31.5	32.46	55	35672	207	0.0605	82	172	189	272	61	127	141	202	56	117	129	186	
	35.5	35.66	50	35672	189	0.0380	77	156	189	272	57	116	141	202	53	107	129	186	
	40	39.77	45	35672	169	0.0370	77	153	189	272	57	114	141	202	52	105	129	186	
	45	45.21	40	35672	149	0.0352	75	153	189	272	56	114	141	202	51	105	129	186	
	50	51.20	35	35672	131	0.0204	75	153	189	272	55	114	141	202	51	105	129	186	
	56	57.11	32	35027	116	0.0199	75	153	189	272	55	114	141	202	51	105	129	186	
	63	64.91	28	35027	102	0.0190	75	153	189	272	55	114	141	202	51	105	129	186	
	71	72.86	25	35027	91	0.0187	75	153	189	272	55	114	141	202	51	105	129	186	
	80	80.82	22	35027	82	0.0164	68	129	151	218	50	96	112	162	46	88	103	149	E4C (x4)
	90	90.15	20	35027	73	0.0162	64	123	151	218	48	91	112	162	44	84	103	149	
	100	102.47	18	35027	64	0.0159	63	123	151	218	47	91	112	162	43	84	103	149	
	112	116.05	16	35027	57	0.0084	62	123	151	218	46	91	112	162	42	84	103	149	
	125	129.44	14	35027	51	0.0083	59	123	151	218	44	91	112	162	40	84	103	149	
	140	147.14	12	35027	45	0.0081	59	123	151	218	44	91	112	162	40	84	103	149	
	160	161.65	11	35027	41	0.0048	59	123	151	218	44	91	112	162	40	84	103	149	
	180	180.30	10	35027	37	0.0047	59	123	151	218	44	91	112	162	40	84	103	149	
	200	204.94	9	35027	32	0.0046	59	123	151	218	44	91	112	162	40	84	103	149	
	224	232.11	8	34387	28	0.0025	59	123	151	218	44	91	112	162	40	84	103	149	
	250	258.60	7	34387	26	0.0025	59	123	151	218	44	91	112	162	40	84	103	149	
	280	294.28	6	34387	22	0.0025	59	123	151	218	44	91	112	162	40	84	103	149	
	315	330.31	5	34387	20	0.0024	59	123	151	218	44	91	112	162	40	84	103	149	

E3C / E4C ...28 — MONOBLOCK HOUSING — 50 Hz — 39 kNm

	i_N	i_{eff}	n_2 [rpm]	T_{2N} [Nm]	P_N [kW]	J [Kgm²]	R1 P_{t0} [kW]	R1	R1 H_2O	R1 +H_2O	S5 P_{t0} [kW]	S5	S5 H_2O	S5 +H_2O	T6 P_{t0} [kW]	T6	T6 H_2O	T6 +H_2O	Type
n_1 = 1000 rpm	**25**	25.60	39	38076	156	0.0654	95	136	205	228	71	101	152	169	65	93	140	156	E3C x3
	28	28.55	35	38076	140	0.0635	89	127	205	224	66	95	152	167	61	87	140	153	
	31.5	32.46	31	36598	118	0.0602	89	125	205	224	66	93	152	167	61	85	140	153	
	35.5	35.66	28	37333	110	0.0378	83	114	205	224	62	85	152	167	57	78	140	153	
	40	39.77	25	37333	98	0.0368	83	112	205	224	62	83	152	167	57	76	140	153	
	45	45.21	22	35869	83	0.0351	81	112	205	224	60	83	152	167	55	76	140	153	
	50	51.20	20	37333	76	0.0203	81	112	205	224	60	83	152	167	55	76	140	153	
	56	57.11	18	37333	68	0.0198	81	112	205	224	60	83	152	167	55	76	140	153	
	63	64.91	15	35869	58	0.0190	81	112	205	224	60	83	152	167	55	76	140	153	
	71	72.86	14	37333	54	0.0187	81	112	205	224	60	83	152	167	55	76	140	153	
	80	80.82	12	37333	48	0.0163	73	94	164	179	54	70	122	133	50	64	112	123	E4C x4
	90	90.15	11	36598	43	0.0162	69	89	164	179	52	66	122	133	47	61	112	123	
	100	102.47	10	35148	36	0.0158	68	89	164	179	50	66	122	133	46	61	112	123	
	112	116.05	9	36598	33	0.0084	67	89	164	179	50	66	122	133	46	61	112	123	
	125	129.44	8	36598	30	0.0083	64	89	164	179	48	66	122	133	44	61	112	123	
	140	147.14	7	35148	25	0.0081	64	89	164	179	48	66	122	133	44	61	112	123	
	160	161.65	6	36598	24	0.0047	64	89	164	179	48	66	122	133	44	61	112	123	
	180	180.30	6	36598	21	0.0047	64	89	164	179	48	66	122	133	44	61	112	123	
	200	205.05	5	36598	19	0.0047	64	89	164	179	48	66	122	133	44	61	112	123	
	224	232.11	4	36598	17	0.0025	64	89	164	179	48	66	122	133	44	61	112	123	
	250	258.89	4	36598	15	0.0025	64	89	164	179	48	66	122	133	44	61	112	123	
	280	294.28	3	35148	13	0.0025	64	89	164	179	48	66	122	133	44	61	112	123	
	315	330.31	3	36598	12	0.0024	64	89	164	179	48	66	122	133	44	61	112	123	
n_1 = 1500 rpm	**25**	25.60	59	38076	234	0.0654	91	181	195	271	67	134	145	201	62	123	133	185	E3C x3
	28	28.55	53	38076	209	0.0635	85	170	195	267	63	126	145	198	58	116	133	182	
	31.5	32.46	46	36598	177	0.0602	84	167	195	267	63	124	145	198	58	114	133	182	
	35.5	35.66	42	37333	164	0.0378	79	152	195	267	59	113	145	198	54	104	133	182	
	40	39.77	38	37333	147	0.0368	79	149	195	267	59	111	145	198	54	102	133	182	
	45	45.21	33	35869	125	0.0351	77	149	195	267	57	111	145	198	53	102	133	182	
	50	51.20	29	37333	115	0.0203	77	149	195	267	57	111	145	198	53	102	133	182	
	56	57.11	26	37333	103	0.0198	77	149	195	267	57	111	145	198	53	102	133	182	
	63	64.91	23	35869	87	0.0190	77	149	195	267	57	111	145	198	53	102	133	182	
	71	72.86	21	37333	80	0.0187	77	149	195	267	57	111	145	198	53	102	133	182	
	80	80.82	19	37333	73	0.0163	70	125	156	214	52	93	116	159	48	86	107	146	E4C x4
	90	90.15	17	36598	64	0.0162	66	119	156	214	49	89	116	159	45	81	107	146	
	100	102.47	15	35148	54	0.0158	65	119	156	214	48	89	116	159	44	81	107	146	
	112	116.05	13	36598	50	0.0084	63	119	156	214	47	89	116	159	43	81	107	146	
	125	129.44	12	36598	44	0.0083	61	119	156	214	45	89	116	159	42	81	107	146	
	140	147.14	10	35148	38	0.0081	61	119	156	214	45	89	116	159	42	81	107	146	
	160	161.65	9	36598	36	0.0047	61	119	156	214	45	89	116	159	42	81	107	146	
	180	180.30	8	36598	32	0.0047	61	119	156	214	45	89	116	159	42	81	107	146	
	200	205.05	8	36598	29	0.0047	61	119	156	214	45	89	116	159	42	81	107	146	
	224	232.11	6	36598	25	0.0025	61	119	156	214	45	89	116	159	42	81	107	146	
	250	258.89	6	36598	22	0.0025	61	119	156	214	45	89	116	159	42	81	107	146	
	280	294.28	5	35148	19	0.0025	61	119	156	214	45	89	116	159	42	81	107	146	
	315	330.31	5	36598	17	0.0024	61	119	156	214	45	89	116	159	42	81	107	146	

E3C / E4C ...28 — MONOBLOCK HOUSING — 60 Hz — 39 kNm

	i_N	i_{eff}	n_2 [rpm]	T_{2N} [Nm]	P_N [kW]	J [Kgm²]	R1 P_{t0} [kW]	R1	R1 H_2O	R1 $+H_2O$	S5 P_{t0} [kW]	S5	S5 H_2O	S5 $+H_2O$	T6 P_{t0} [kW]	T6	T6 H_2O	T6 $+H_2O$	Type
n_1 = 1200 rpm	**25**	25.60	47	38076	187	0.0654	93	155	201	244	69	115	149	181	64	106	137	167	E3C (x3)
	28	28.55	42	38076	168	0.0635	88	146	201	240	65	108	149	179	60	100	137	164	
	31.5	32.46	37	36598	142	0.0602	87	143	201	240	65	106	149	179	59	98	137	164	
	35.5	35.66	34	37333	132	0.0378	82	131	201	240	61	97	149	179	56	89	137	164	
	40	39.77	30	37333	118	0.0368	81	128	201	240	60	95	149	179	55	88	137	164	
	45	45.21	27	35869	100	0.0351	79	128	201	240	59	95	149	179	54	88	137	164	
	50	51.20	23	37333	92	0.0203	79	128	201	240	59	95	149	179	54	88	137	164	
	56	57.11	21	37333	82	0.0198	79	128	201	240	59	95	149	179	54	88	137	164	
	63	64.91	18	35869	69	0.0190	79	128	201	240	59	95	149	179	54	88	137	164	
	71	72.86	16	37333	64	0.0187	79	128	201	240	59	95	149	179	54	88	137	164	
	80	80.82	15	37333	58	0.0163	72	108	161	192	53	80	119	143	49	74	110	131	E4C (x4)
	90	90.15	13	36598	51	0.0162	68	103	161	192	51	76	119	143	46	70	110	131	
	100	102.47	12	35148	43	0.0158	67	103	161	192	50	76	119	143	46	70	110	131	
	112	116.05	10	36598	40	0.0084	65	103	161	192	49	76	119	143	45	70	110	131	
	125	129.44	9	36598	36	0.0083	63	103	161	192	47	76	119	143	43	70	110	131	
	140	147.14	8	35148	30	0.0081	63	103	161	192	47	76	119	143	43	70	110	131	
	160	161.65	7	36598	28	0.0047	63	103	161	192	47	76	119	143	43	70	110	131	
	180	180.30	7	36598	26	0.0047	63	103	161	192	47	76	119	143	43	70	110	131	
	200	205.05	6	36598	23	0.0047	63	103	161	192	47	76	119	143	43	70	110	131	
	224	232.11	5	36598	20	0.0025	63	103	161	192	47	76	119	143	43	70	110	131	
	250	258.89	5	36598	18	0.0025	63	103	161	192	47	76	119	143	43	70	110	131	
	280	294.28	4	35148	15	0.0025	63	103	161	192	47	76	119	143	43	70	110	131	
	315	330.31	4	36598	14	0.0024	63	103	161	192	47	76	119	143	43	70	110	131	
n_1 = 1800 rpm	**25**	25.60	70	38076	280	0.0654	88	186	189	277	65	138	141	205	60	127	129	189	E3C (x3)
	28	28.55	63	38076	251	0.0635	82	175	189	272	61	130	141	202	56	119	129	186	
	31.5	32.46	55	36598	213	0.0602	82	172	189	272	61	127	141	202	56	117	129	186	
	35.5	35.66	50	37333	197	0.0378	77	156	189	272	57	116	141	202	53	107	129	186	
	40	39.77	45	37333	177	0.0368	77	153	189	272	57	114	141	202	52	105	129	186	
	45	45.21	40	35869	150	0.0351	75	153	189	272	56	114	141	202	51	105	129	186	
	50	51.20	35	37333	137	0.0203	75	153	189	272	55	114	141	202	51	105	129	186	
	56	57.11	32	37333	123	0.0198	75	153	189	272	55	114	141	202	51	105	129	186	
	63	64.91	28	35869	104	0.0190	75	153	189	272	55	114	141	202	51	105	129	186	
	71	72.86	25	37333	97	0.0187	75	153	189	272	55	114	141	202	51	105	129	186	
	80	80.82	22	37333	87	0.0163	68	129	151	218	50	96	112	162	46	88	103	149	E4C (x4)
	90	90.15	20	36598	77	0.0162	64	123	151	218	48	91	112	162	44	84	103	149	
	100	102.47	18	35148	65	0.0158	63	123	151	218	47	91	112	162	43	84	103	149	
	112	116.05	16	36598	59	0.0084	62	123	151	218	46	91	112	162	42	84	103	149	
	125	129.44	14	36598	53	0.0083	59	123	151	218	44	91	112	162	40	84	103	149	
	140	147.14	12	35148	45	0.0081	59	123	151	218	44	91	112	162	40	84	103	149	
	160	161.65	11	36598	43	0.0047	59	123	151	218	44	91	112	162	40	84	103	149	
	180	180.30	10	36598	38	0.0047	59	123	151	218	44	91	112	162	40	84	103	149	
	200	205.05	9	36598	34	0.0047	59	123	151	218	44	91	112	162	40	84	103	149	
	224	232.11	8	36598	30	0.0025	59	123	151	218	44	91	112	162	40	84	103	149	
	250	258.89	7	36598	27	0.0025	59	123	151	218	44	91	112	162	40	84	103	149	
	280	294.28	6	35148	23	0.0025	59	123	151	218	44	91	112	162	40	84	103	149	
	315	330.31	5	36598	21	0.0024	59	123	151	218	44	91	112	162	40	84	103	149	

E3C / E4C ...31 — MONOBLOCK HOUSING — 50 Hz — 50 kNm

	i_N	i_{eff}	n_2 [rpm]	T_{2N} [Nm]	P_N [kW]	J [Kgm²]	R1 P_{t0} [kW]	R1	R1 H_2O	R1 +H_2O	S5 P_{t0} [kW]	S5	S5 H_2O	S5 +H_2O	T6 P_{t0} [kW]	T6	T6 H_2O	T6 +H_2O	Type
n_1 = 1000 rpm	**35.5**	34.67	29	49520	150	0.0680	114	158	330	337	84	117	245	250	78	108	225	230	E3C x3
	40	38.67	26	49520	134	0.0656	106	148	330	337	79	110	245	250	73	101	225	230	
	45	43.95	23	49520	118	0.0618	106	144	330	337	79	107	245	250	73	99	225	230	
	50	48.29	21	49520	107	0.0391	100	135	330	337	74	100	245	250	68	92	225	230	
	56	53.86	19	49520	96	0.0379	97	134	330	337	72	100	245	250	66	92	225	230	
	63	61.22	16	48741	83	0.0359	97	134	330	337	72	100	245	250	66	92	225	230	
	71	69.33	14	49855	75	0.0209	97	134	330	337	72	100	245	250	66	92	225	230	
	80	77.33	13	49855	68	0.0203	97	134	330	337	72	100	245	250	66	92	225	230	
	90	87.90	11	48741	58	0.0194	97	134	330	337	72	100	245	250	66	92	225	230	
	100	98.67	10	49855	53	0.0190	97	134	330	337	72	100	245	250	66	92	225	230	
	112	109.45	9	49855	48	0.0166	84	109	264	269	62	81	196	200	57	75	180	184	E4C x4
	125	122.08	8	49855	43	0.0164	79	107	264	269	59	80	196	200	54	73	180	184	
	140	138.76	7	47780	36	0.0160	78	107	264	269	58	80	196	200	53	73	180	184	
	160	157.16	6	49855	33	0.0085	78	107	264	269	58	80	196	200	53	73	180	184	
	180	175.29	6	49855	30	0.0084	78	107	264	269	58	80	196	200	53	73	180	184	
	200	199.25	5	47780	25	0.0082	78	107	264	269	58	80	196	200	53	73	180	184	
	224	218.90	5	49855	24	0.0048	78	107	264	269	58	80	196	200	53	73	180	184	
	250	244.15	4	49855	21	0.0047	78	107	264	269	58	80	196	200	53	73	180	184	
	280	277.53	4	47780	18	0.0047	78	107	264	269	58	80	196	200	53	73	180	184	
	315	314.31	3	49855	17	0.0026	78	107	264	269	58	80	196	200	53	73	180	184	
	355	350.58	3	49855	15	0.0025	78	107	264	269	58	80	196	200	53	73	180	184	
	400	398.50	3	46829	12	0.0025	78	107	264	269	58	80	196	200	53	73	180	184	
	450	447.29	2	49711	12	0.0025	78	107	264	269	58	80	196	200	53	73	180	184	
n_1 = 1500 rpm	**35.5**	34.67	43	49520	224	0.0680	108	211	314	401	80	157	233	298	74	144	214	274	E3C x3
	40	38.67	39	49520	201	0.0656	101	198	314	401	75	147	233	298	69	135	214	274	
	45	43.95	34	49520	177	0.0618	101	193	314	401	75	143	233	298	69	132	214	274	
	50	48.29	31	49520	161	0.0391	95	179	314	401	71	133	233	298	65	123	214	274	
	56	53.86	28	49520	144	0.0379	92	179	314	401	68	133	233	298	63	122	214	274	
	63	61.22	25	48741	125	0.0359	92	179	314	401	68	133	233	298	63	122	214	274	
	71	69.33	22	49855	113	0.0209	92	179	314	401	68	133	233	298	63	122	214	274	
	80	77.33	19	49855	101	0.0203	92	179	314	401	68	133	233	298	63	122	214	274	
	90	87.90	17	48741	87	0.0194	92	179	314	401	68	133	233	298	63	122	214	274	
	100	98.67	15	49855	79	0.0190	92	179	314	401	68	133	233	298	63	122	214	274	
	112	109.45	14	49855	72	0.0166	80	146	251	321	59	108	186	238	55	100	171	219	E4C x4
	125	122.08	12	49855	64	0.0164	76	143	251	321	56	106	186	238	52	98	171	219	
	140	138.76	11	47780	54	0.0160	74	143	251	321	55	106	186	238	51	98	171	219	
	160	157.16	10	49855	50	0.0085	74	143	251	321	55	106	186	238	51	98	171	219	
	180	175.29	9	49855	45	0.0084	74	143	251	321	55	106	186	238	51	98	171	219	
	200	199.25	8	47780	38	0.0082	74	143	251	321	55	106	186	238	51	98	171	219	
	224	218.90	7	49855	36	0.0048	74	143	251	321	55	106	186	238	51	98	171	219	
	250	244.15	6	49855	32	0.0047	74	143	251	321	55	106	186	238	51	98	171	219	
	280	277.53	5	47780	27	0.0047	74	143	251	321	55	106	186	238	51	98	171	219	
	315	314.31	5	49855	25	0.0026	74	143	251	321	55	106	186	238	51	98	171	219	
	355	350.58	4	49855	22	0.0025	74	143	251	321	55	106	186	238	51	98	171	219	
	400	398.50	4	46829	18	0.0025	74	143	251	321	55	106	186	238	51	98	171	219	
	450	447.29	3	49711	17	0.0025	74	143	251	321	55	106	186	238	51	98	171	219	

E3C / E4C ...31 — MONOBLOCK HOUSING — 60 Hz — 50 kNm

	i_N	i_{eff}	n_2 [rpm]	T_{2N} [Nm]	P_N [kW]	J [Kgm²]	R1 P_{t0} [kW]	R1	R1 H_2O	R1 $+H_2O$	S5 P_{t0} [kW]	S5	S5 H_2O	S5 $+H_2O$	T6 P_{t0} [kW]	T6	T6 H_2O	T6 $+H_2O$	Type
n_1 = 1200 rpm	**35.5**	34.67	35	49520	179	0.0680	111	181	323	361	83	135	240	268	76	124	221	246	E3C (x3)
	40	38.67	31	49520	161	0.0656	104	170	323	361	77	126	240	268	71	116	221	246	
	45	43.95	27	49520	142	0.0618	104	166	323	361	77	123	240	268	71	113	221	246	
	50	48.29	25	49520	129	0.0391	98	154	323	361	73	115	240	268	67	105	221	246	
	56	53.86	22	49520	116	0.0379	95	154	323	361	71	114	240	268	65	105	221	246	
	63	61.22	20	48741	100	0.0359	95	154	323	361	70	114	240	268	65	105	221	246	
	71	69.33	17	49855	90	0.0209	95	154	323	361	70	114	240	268	65	105	221	246	
	80	77.33	16	49855	81	0.0203	95	154	323	361	70	114	240	268	65	105	221	246	
	90	87.90	14	48741	70	0.0194	95	154	323	361	70	114	240	268	65	105	221	246	
	100	98.67	12	49855	63	0.0190	95	154	323	361	70	114	240	268	65	105	221	246	
	112	109.45	11	49855	57	0.0166	82	126	259	289	61	93	192	215	56	86	177	197	E4C (x4)
	125	122.08	10	49855	51	0.0164	78	123	259	289	58	92	192	215	53	84	177	197	
	140	138.76	9	47780	43	0.0160	76	123	259	289	57	92	192	215	52	84	177	197	
	160	157.16	8	49855	40	0.0085	76	123	259	289	57	92	192	215	52	84	177	197	
	180	175.29	7	49855	36	0.0084	76	123	259	289	57	92	192	215	52	84	177	197	
	200	199.25	6	47780	30	0.0082	76	123	259	289	57	92	192	215	52	84	177	197	
	224	218.90	5	49855	29	0.0048	76	123	259	289	57	92	192	215	52	84	177	197	
	250	244.15	5	49855	26	0.0047	76	123	259	289	57	92	192	215	52	84	177	197	
	280	277.53	4	47780	22	0.0047	76	123	259	289	57	92	192	215	52	84	177	197	
	315	314.31	4	49855	20	0.0026	76	123	259	289	57	92	192	215	52	84	177	197	
	355	350.58	3	49855	18	0.0025	76	123	259	289	57	92	192	215	52	84	177	197	
	400	398.50	3	46829	15	0.0025	76	123	259	289	57	92	192	215	52	84	177	197	
	450	447.29	3	49711	14	0.0025	76	123	259	289	57	92	192	215	52	84	177	197	
n_1 = 1800 rpm	**35.5**	34.67	52	49520	269	0.0680	105	217	305	409	78	161	226	304	72	148	208	279	E3C (x3)
	40	38.67	47	49520	241	0.0656	98	204	305	409	73	151	226	304	67	139	208	279	
	45	43.95	41	49520	212	0.0618	98	198	305	409	73	147	226	304	67	135	208	279	
	50	48.29	37	49520	193	0.0391	92	185	305	409	68	137	226	304	63	126	208	279	
	56	53.86	33	49520	173	0.0379	89	184	305	409	66	137	226	304	61	126	208	279	
	63	61.22	29	48741	150	0.0359	89	184	305	409	66	137	226	304	61	126	208	279	
	71	69.33	26	49855	136	0.0209	89	184	305	409	66	137	226	304	61	126	208	279	
	80	77.33	23	49855	122	0.0203	89	184	305	409	66	137	226	304	61	126	208	279	
	90	87.90	20	48741	105	0.0194	89	184	305	409	66	137	226	304	61	126	208	279	
	100	98.67	18	49855	95	0.0190	89	184	305	409	66	137	226	304	61	126	208	279	
	112	109.45	16	49855	86	0.0166	77	150	243	327	58	112	181	243	53	103	166	223	E4C (x4)
	125	122.08	15	49855	77	0.0164	73	147	243	327	55	110	181	243	50	101	166	223	
	140	138.76	13	47780	65	0.0160	72	147	243	327	53	110	181	243	49	101	166	223	
	160	157.16	11	49855	60	0.0085	72	147	243	327	53	110	181	243	49	101	166	223	
	180	175.29	10	49855	54	0.0084	72	147	243	327	53	110	181	243	49	101	166	223	
	200	199.25	9	47780	45	0.0082	72	147	243	327	53	110	181	243	49	101	166	223	
	224	218.90	8	49855	43	0.0048	72	147	243	327	53	110	181	243	49	101	166	223	
	250	244.15	7	49855	38	0.0047	72	147	243	327	53	110	181	243	49	101	166	223	
	280	277.53	6	47780	32	0.0047	72	147	243	327	53	110	181	243	49	101	166	223	
	315	314.31	6	49855	30	0.0026	72	147	243	327	53	110	181	243	49	101	166	223	
	355	350.58	5	49855	27	0.0025	72	147	243	327	53	110	181	243	49	101	166	223	
	400	398.50	5	46829	22	0.0025	72	147	243	327	53	110	181	243	49	101	166	223	
	450	447.29	4	49711	21	0.0025	72	147	243	327	53	110	181	243	49	101	166	223	

DANA
BREVINI®
Motion Systems

Type			Size	i_N	T_{2N} [kNm]	Efficiency η	Page
SPLIT HOUSING	Housing type 12 / Housing type 11 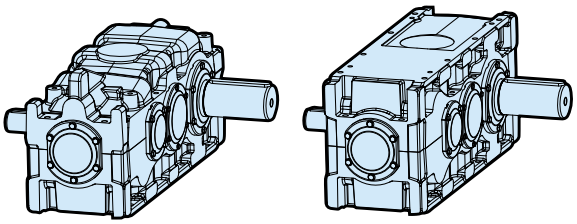 **Helical gear units**	**E2H**	**35**	4 - 450	59 - 64	0.98	114
			36	5 - 450	59 - 68		118
			40	5- 630	79 - 89		122
			42	4 - 450	100 - 111		126
		E3H	**43**	4.5 - 500	104 - 119		130
			45	5 - 560	118 - 140	0.97	134
			47	6.3 - 710	152 - 178		138
		E4H	**48**	4 - 450	177 - 191	0.96	142
			50	4 - 450	185 - 213		146
			53	4.5 - 560	230 - 255		150
			56	5.6 - 630	280 - 310		154
	Housing type 12 / Housing type 11 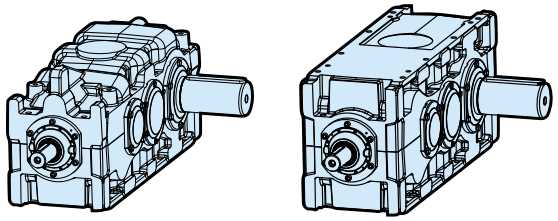 **Bevel-helical gear units**	**E3B**	**35**	9 - 315	43 - 65	0.96	158
			36	10 - 355	49 - 71		162
			40	11.2 - 400	57 - 85		166
			42	9 - 315	75 - 113		170
			43	10 - 355	85 - 130		174
			45	11.2 - 400	93 - 135		178
		E4B	**47**	14 - 500	88 - 175	0.95	182
			48	9 - 315	101 - 191		186
			50	10 - 315	116 - 212		190
			53	11.2 - 400	121 - 255		194
			56	12.5 - 450	148 - 310		198

E2H / E3H / E4H ...35 — SPLIT HOUSING — 50 Hz — 64 kNm

n_1 = 1000 rpm

i_N	i_{eff}	n_2 [rpm]	T_{2N} [Nm]	P_N [kW]	J [Kgm²]	R1 P_{t0} [kW]	R1	R1 H_2O	R1 +H_2O	S5 P_{t0} [kW]	S5	S5 H_2O	S5 +H_2O	T6 P_{t0} [kW]	T6	T6 H_2O	T6 +H_2O	Type
4	3.97	252	63632	1679	0.8643	343	660	678	996	255	491	504	740	234	451	463	680	E2H (x2)
4.5	4.48	223	63632	1489	0.7236	332	640	657	965	247	475	488	717	227	437	449	659	
5	5.06	198	63632	1316	0.6174	320	617	634	931	238	459	471	691	219	422	433	636	
5.6	5.74	174	63632	1160	0.5039	305	588	604	886	227	437	449	659	208	402	412	605	
6.3	6.27	160	63632	1063	0.4852	287	553	568	834	213	411	422	620	196	378	388	570	
7.1	7.16	140	62403	912	0.4021	272	525	539	791	202	390	400	588	186	358	368	540	
8	7.68	130	62403	851	0.3647	264	509	523	768	196	378	388	570	180	348	357	524	
9	8.70	115	62403	751	0.2903	257	495	508	746	191	368	378	554	175	338	347	510	
10	9.99	100	62403	654	0.2419	246	475	487	716	183	353	362	532	168	324	333	489	
11.2	10.86	92	62403	602	0.2126	236	455	467	685	175	338	347	509	161	310	319	468	
12.5	12.77	78	61185	502	0.1580	215	414	429	625	160	308	319	464	147	283	293	427	
14	14.36	70	61185	446	0.1371	207	390	422	588	154	290	314	437	142	266	288	402	
16	15.89	63	61185	403	0.1155	207	383	422	578	154	285	314	429	141	262	288	395	
18	17.84	56	58786	345	0.1028	207	354	422	534	154	263	314	397	141	242	288	365	
16	16.07	62	61185	399	0.1545	164	317	368	477	122	235	273	355	112	216	251	326	E3H (x3)
18	18.07	55	61185	355	0.1418	156	301	368	454	116	223	273	337	107	205	251	310	
20	19.99	50	59979	314	0.1282	155	296	368	446	115	220	273	331	106	202	251	304	
22.4	22.99	43	59979	273	0.0868	154	291	368	441	114	216	273	327	105	199	251	301	
25	25.85	39	59979	243	0.0806	154	277	368	437	114	206	273	325	105	189	251	298	
28	28.60	35	59979	220	0.0739	154	274	368	437	114	203	273	325	105	187	251	298	
31.5	32.10	31	61458	200	0.0700	154	258	368	437	114	192	273	325	105	176	251	298	
35.5	35.90	28	59979	175	0.0580	154	251	368	437	114	186	273	325	105	171	251	298	
40	39.73	25	58786	155	0.0546	154	248	368	437	114	184	273	325	105	169	251	298	
45	44.59	22	61458	144	0.0525	154	235	368	437	114	174	273	325	105	160	251	298	
50	51.10	20	59979	123	0.0279	154	223	368	437	114	166	273	325	105	152	251	298	
56	57.44	17	58786	107	0.0267	154	223	368	437	114	166	273	325	105	152	251	298	
63	63.56	16	58786	97	0.0253	154	223	368	437	114	166	273	325	105	152	251	298	
71	71.34	14	61458	90	0.0245	154	223	368	437	114	166	273	325	105	152	251	298	
80	78.99	13	58786	78	0.0162	154	223	368	437	114	166	273	325	105	152	251	298	
90	87.40	11	59983	72	0.0155	154	223	368	437	114	166	273	325	105	152	251	298	
100	98.10	10	61458	66	0.0151	154	223	368	437	114	166	273	325	105	152	251	298	
71	72.79	14	58786	85	0.0323	116	181	276	273	86	134	205	203	79	123	189	186	E4H (x4)
80	81.83	12	58786	75	0.0316	116	173	276	261	86	129	205	194	79	118	189	179	
90	90.55	11	59492	69	0.0310	116	171	276	258	86	127	205	191	79	117	189	176	
100	104.15	10	58786	59	0.0200	116	166	276	251	86	124	205	186	79	114	189	171	
112	117.09	9	58786	53	0.0197	116	160	276	248	86	119	205	179	79	109	189	164	
125	129.55	8	59492	48	0.0193	116	157	276	248	86	117	205	176	79	108	189	162	
140	145.42	7	59000	42	0.0191	116	151	276	248	86	111	205	168	79	102	189	154	
160	162.62	6	58786	38	0.0123	116	150	276	248	86	109	205	164	79	100	189	151	
180	179.94	6	59492	35	0.0122	116	150	276	248	86	107	205	162	79	99	189	149	
200	201.97	5	59000	31	0.0121	116	150	276	248	86	102	205	154	79	94	189	142	
224	231.44	4	58508	26	0.0069	116	150	276	248	86	103	205	155	79	94	189	142	
250	260.19	4	59000	24	0.0068	116	150	276	248	86	102	205	154	79	94	189	141	
280	287.90	3	59492	22	0.0068	116	150	276	248	86	101	205	153	79	93	189	140	
315	323.14	3	59000	19	0.0067	116	150	276	248	86	100	205	151	79	92	189	139	
355	364.27	3	59000	17	0.0039	116	150	276	248	86	100	205	150	79	92	189	138	
400	403.06	2	59492	15	0.0039	116	150	276	248	86	99	205	149	79	91	189	137	
450	452.40	2	59000	14	0.0039	116	150	276	248	86	97	205	146	79	89	189	134	

E2H / E3H / E4H ...35 — SPLIT HOUSING — 50 Hz — 64 kNm

n_1 = 1500 rpm

i_N	i_{eff}	n_2 [rpm]	T_{2N} [Nm]	P_N [kW]	J [Kgm²]	R1 P_{t0} [kW]	R1	R1 H_2O	R1 $+H_2O$	S5 P_{t0} [kW]	S5	S5 H_2O	S5 $+H_2O$	T6 P_{t0} [kW]	T6	T6 H_2O	T6 $+H_2O$	Type
4	3.97	378	63632	2518	0.8643	321	883	635	1197	238	656	472	889	219	603	434	818	E2H (x2)
4.5	4.48	335	63632	2233	0.7236	313	862	620	1169	233	641	461	869	214	589	423	798	
5	5.06	296	63632	1975	0.6174	304	837	602	1135	226	622	447	843	208	572	411	775	
5.6	5.74	261	63632	1740	0.5039	291	802	576	1087	216	596	428	808	199	548	394	743	
6.3	6.27	239	63632	1595	0.4852	275	758	544	1027	204	563	405	763	188	517	372	701	
7.1	7.16	209	62403	1369	0.4021	262	722	519	978	195	536	385	727	179	493	354	668	
8	7.68	195	62403	1277	0.3647	255	702	505	952	190	522	375	707	174	480	345	650	
9	8.70	172	62403	1126	0.2903	249	686	493	929	185	509	366	691	170	468	337	635	
10	9.99	150	62403	981	0.2419	240	660	474	895	178	490	353	665	164	451	324	611	
11.2	10.86	138	62403	902	0.2126	230	633	455	858	171	470	338	638	157	432	311	586	
12.5	12.77	117	61185	752	0.1580	211	577	424	782	157	429	315	581	144	394	289	534	
14	14.36	104	61185	669	0.1371	207	543	422	736	154	403	314	547	141	371	288	502	
16	15.89	94	61185	605	0.1155	207	533	422	722	154	396	314	536	141	364	288	493	
18	17.84	84	58786	518	0.1028	207	490	422	664	154	364	314	494	141	335	288	454	
16	16.07	93	61185	598	0.1545	158	434	368	589	117	323	273	437	108	297	251	402	E3H (x3)
18	18.07	83	61185	532	0.1418	154	412	368	558	114	306	273	415	105	281	251	381	
20	19.99	75	59979	471	0.1282	154	403	368	546	114	299	273	406	105	275	251	373	
22.4	22.99	65	59979	410	0.0868	154	402	368	545	114	299	273	405	105	275	251	373	
25	25.85	58	59979	364	0.0806	154	382	368	519	114	284	273	386	105	261	251	355	
28	28.60	52	59979	329	0.0739	154	376	368	515	114	279	273	382	105	257	251	352	
31.5	32.10	47	61458	301	0.0700	154	354	368	514	114	263	273	382	105	242	251	351	
35.5	35.90	42	59979	262	0.0580	154	350	368	514	114	260	273	382	105	239	251	351	
40	39.73	38	58786	232	0.0546	154	344	368	514	114	256	273	382	105	235	251	351	
45	44.59	34	61458	216	0.0525	154	326	368	514	114	242	273	382	105	222	251	351	
50	51.10	29	59979	184	0.0279	154	306	368	514	114	227	273	382	105	209	251	351	
56	57.44	26	58786	161	0.0267	154	300	368	514	114	223	273	382	105	205	251	351	
63	63.56	24	58786	145	0.0253	154	300	368	514	114	223	273	382	105	205	251	351	
71	71.34	21	61458	135	0.0245	154	300	368	514	114	223	273	382	105	205	251	351	
80	78.99	19	58786	117	0.0162	154	300	368	514	114	223	273	382	105	205	251	351	
90	87.40	17	59983	108	0.0155	154	300	368	514	114	223	273	382	105	205	251	351	
100	98.10	15	61458	98	0.0151	154	300	368	514	114	223	273	382	105	205	251	351	
71	72.79	21	58786	127	0.0323	116	250	276	339	86	186	205	252	79	171	189	231	E4H (x4)
80	81.83	18	58786	113	0.0316	116	239	276	324	86	178	205	241	79	163	189	221	
90	90.55	17	59492	103	0.0310	116	235	276	319	86	175	205	237	79	161	189	218	
100	104.15	14	58786	89	0.0200	116	231	276	313	86	172	205	233	79	158	189	214	
112	117.09	13	58786	79	0.0197	116	222	276	300	86	165	205	223	79	151	189	205	
125	129.55	12	59492	72	0.0193	116	218	276	296	86	162	205	220	79	149	189	202	
140	145.42	10	59000	64	0.0191	116	207	276	289	86	154	205	209	79	141	189	192	
160	162.62	9	58786	57	0.0123	116	205	276	289	86	151	205	205	79	139	189	188	
180	179.94	8	59492	52	0.0122	116	204	276	289	86	149	205	202	79	137	189	186	
200	201.97	7	59000	46	0.0121	116	202	276	289	86	142	205	192	79	130	189	177	
224	231.44	6	58508	40	0.0069	116	202	276	289	86	142	205	192	79	130	189	177	
250	260.19	6	59000	36	0.0068	116	202	276	289	86	141	205	191	79	129	189	175	
280	287.90	5	59492	32	0.0068	116	202	276	289	86	139	205	189	79	128	189	174	
315	323.14	5	59000	29	0.0067	116	202	276	289	86	137	205	186	79	126	189	171	
355	364.27	4	59000	25	0.0039	116	202	276	289	86	136	205	184	79	125	189	170	
400	403.06	4	59492	23	0.0039	116	202	276	289	86	134	205	182	79	123	189	167	
450	452.40	3	59000	20	0.0039	116	202	276	289	86	131	205	178	79	120	189	163	

E2H / E3H / E4H ...35 — SPLIT HOUSING — 60 Hz — 64 kNm

	i_N	i_{eff}	n_2 [rpm]	T_{2N} [Nm]	P_N [kW]	J [Kgm²]	R1 P_{t0} [kW]	R1	R1 H_2O	R1 +H_2O	S5 P_{t0} [kW]	S5	S5 H_2O	S5 +H_2O	T6 P_{t0} [kW]	T6	T6 H_2O	T6 +H_2O	Type
n_1 = 1200 rpm	**4**	3.97	302	63632	2015	0.8643	333	752	659	1078	248	559	490	801	228	514	450	737	E2H (x2)
	4.5	4.48	268	63632	1786	0.7236	324	731	641	1048	241	543	476	779	221	499	438	716	
	5	5.06	237	63632	1580	0.6174	313	707	620	1014	233	525	460	753	214	483	423	692	
	5.6	5.74	209	63632	1392	0.5039	299	675	592	968	222	502	440	719	204	461	404	661	
	6.3	6.27	191	63632	1276	0.4852	282	636	558	912	209	473	414	678	193	435	381	623	
	7.1	7.16	168	62403	1095	0.4021	268	605	530	867	199	449	394	644	183	413	362	592	
	8	7.68	156	62403	1021	0.3647	260	588	515	842	193	437	383	626	178	401	352	575	
	9	8.70	138	62403	901	0.2903	254	572	502	820	188	425	373	610	173	391	343	560	
	10	9.99	120	62403	785	0.2419	243	550	482	788	181	408	358	585	166	375	329	538	
	11.2	10.86	110	62403	722	0.2126	233	527	462	755	173	391	343	561	159	360	315	516	
	12.5	12.77	94	61185	602	0.1580	213	480	427	688	158	356	317	511	145	328	291	470	
	14	14.36	84	61185	535	0.1371	207	451	422	647	154	335	314	481	141	308	288	442	
	16	15.89	76	61185	484	0.1155	207	443	422	635	154	329	314	472	141	303	288	434	
	18	17.84	67	58786	414	0.1028	207	408	422	586	154	304	314	435	141	279	288	400	
	16	16.07	75	61185	478	0.1545	161	364	368	522	120	271	273	388	110	249	251	356	E3H (x3)
	18	18.07	66	61185	426	0.1418	154	346	368	495	115	257	273	368	106	236	251	338	
	20	19.99	60	59979	377	0.1282	154	339	368	486	114	252	273	361	105	231	251	332	
	22.4	22.99	52	59979	328	0.0868	154	336	368	482	114	250	273	358	105	230	251	329	
	25	25.85	46	59979	292	0.0806	154	320	368	458	114	238	273	341	105	218	251	313	
	28	28.60	42	59979	263	0.0739	154	315	368	452	114	234	273	336	105	215	251	309	
	31.5	32.10	37	61458	241	0.0700	154	297	368	437	114	221	273	325	105	203	251	298	
	35.5	35.90	33	59979	210	0.0580	154	291	368	437	114	216	273	325	105	199	251	298	
	40	39.73	30	58786	186	0.0546	154	287	368	437	114	213	273	325	105	196	251	298	
	45	44.59	27	61458	173	0.0525	154	272	368	437	114	202	273	325	105	186	251	298	
	50	51.10	23	59979	147	0.0279	154	254	368	437	114	188	273	325	105	173	251	298	
	56	57.44	21	58786	129	0.0267	154	242	368	437	114	180	273	325	105	166	251	298	
	63	63.56	19	58786	116	0.0253	154	239	368	437	114	178	273	325	105	164	251	298	
	71	71.34	17	61458	108	0.0245	154	228	368	437	114	169	273	325	105	156	251	298	
	80	78.99	15	58786	94	0.0162	154	223	368	437	114	166	273	325	105	152	251	298	
	90	87.40	14	59983	86	0.0155	154	223	368	437	114	166	273	325	105	152	251	298	
	100	98.10	12	61458	79	0.0151	154	223	368	437	114	166	273	325	105	152	251	298	
	71	72.79	16	58786	101	0.0323	116	209	276	299	86	155	205	222	79	143	189	204	E4H (x4)
	80	81.83	15	58786	90	0.0316	116	200	276	287	86	149	205	213	79	137	189	196	
	90	90.55	13	59492	83	0.0310	116	197	276	283	86	146	205	210	79	135	189	193	
	100	104.15	12	58786	71	0.0200	116	192	276	276	86	143	205	205	79	131	189	188	
	112	117.09	10	58786	63	0.0197	116	185	276	265	86	137	205	197	79	126	189	181	
	125	129.55	9	59492	58	0.0193	116	182	276	261	86	135	205	194	79	124	189	178	
	140	145.42	8	59000	51	0.0191	116	173	276	249	86	128	205	184	79	118	189	169	
	160	162.62	7	58786	45	0.0123	116	169	276	248	86	126	205	180	79	116	189	166	
	180	179.94	7	59492	42	0.0122	116	167	276	248	86	124	205	178	79	114	189	164	
	200	201.97	6	59000	37	0.0121	116	159	276	248	86	118	205	169	79	109	189	156	
	224	231.44	5	58508	32	0.0069	116	159	276	248	86	118	205	170	79	109	189	156	
	250	260.19	5	59000	28	0.0068	116	158	276	248	86	118	205	169	79	108	189	155	
	280	287.90	4	59492	26	0.0068	116	157	276	248	86	117	205	167	79	107	189	154	
	315	323.14	4	59000	23	0.0067	116	155	276	248	86	115	205	165	79	106	189	152	
	355	364.27	3	59000	20	0.0039	116	154	276	248	86	114	205	164	79	105	189	151	
	400	403.06	3	59492	19	0.0039	116	153	276	248	86	113	205	162	79	104	189	149	
	450	452.40	3	59000	16	0.0039	116	151	276	248	86	111	205	159	79	102	189	146	

E2H / E3H / E4H ...35 — SPLIT HOUSING — 60 Hz — 64 kNm

	i_N	i_{eff}	n_2 [rpm]	T_{2N} [Nm]	P_N [kW]	J [Kgm²]	R1 P_{t0} [kW]	R1	R1 H_2O	R1 $+H_2O$	S5 P_{t0} [kW]	S5	S5 H_2O	S5 $+H_2O$	T6 P_{t0} [kW]	T6	T6 H_2O	T6 $+H_2O$	Type
n_1 = 1800 rpm	4	3.97	454	63632	3022	0.8643	309	902	612	1205	230	670	455	895	211	616	418	823	E2H (x2)
	4.5	4.48	402	63632	2679	0.7236	303	885	600	1182	225	658	446	878	207	605	410	807	
	5	5.06	356	63632	2370	0.6174	296	863	585	1152	220	641	435	856	202	589	400	787	
	5.6	5.74	313	63632	2088	0.5039	284	830	562	1108	211	616	418	823	194	567	384	757	
	6.3	6.27	287	63632	1914	0.4852	269	785	532	1049	200	583	396	779	184	536	364	716	
	7.1	7.16	251	62403	1642	0.4021	257	750	508	1001	191	557	378	744	176	512	347	684	
	8	7.68	234	62403	1532	0.3647	250	730	495	975	186	543	368	725	171	499	338	666	
	9	8.70	207	62403	1351	0.2903	245	715	484	954	182	531	360	709	167	488	331	652	
	10	9.99	180	62403	1178	0.2419	236	689	467	920	175	512	347	684	161	471	319	629	
	11.2	10.86	166	62403	1083	0.2126	227	662	449	884	168	492	333	657	155	452	306	604	
	12.5	12.77	141	61185	903	0.1580	210	604	422	806	156	449	314	599	143	412	288	551	
	14	14.36	125	61185	803	0.1371	207	568	422	759	154	422	314	564	141	388	288	518	
	16	15.89	113	61185	726	0.1155	207	558	422	745	154	415	314	554	141	381	288	509	
	18	17.84	101	58786	621	0.1028	207	513	422	685	154	381	314	509	141	350	288	468	
	16	16.07	112	61185	718	0.1545	155	452	368	603	115	335	273	448	106	308	251	412	E3H (x3)
	18	18.07	100	61185	638	0.1418	154	428	368	571	114	318	273	425	105	292	251	390	
	20	19.99	90	59979	565	0.1282	154	418	368	559	114	311	273	415	105	286	251	382	
	22.4	22.99	78	59979	492	0.0868	154	420	368	561	114	312	273	416	105	287	251	383	
	25	25.85	70	59979	437	0.0806	154	398	368	532	114	296	273	395	105	272	251	363	
	28	28.60	63	59979	395	0.0739	154	391	368	522	114	291	273	388	105	267	251	357	
	31.5	32.10	56	61458	361	0.0700	154	367	368	514	114	273	273	382	105	251	251	351	
	35.5	35.90	50	59979	315	0.0580	154	365	368	514	114	271	273	382	105	249	251	351	
	40	39.73	45	58786	279	0.0546	154	359	368	514	114	267	273	382	105	245	251	351	
	45	44.59	40	61458	260	0.0525	154	339	368	514	114	252	273	382	105	232	251	351	
	50	51.10	35	59979	221	0.0279	154	322	368	514	114	239	273	382	105	220	251	351	
	56	57.44	31	58786	193	0.0267	154	307	368	514	114	228	273	382	105	209	251	351	
	63	63.56	28	58786	174	0.0253	154	303	368	514	114	225	273	382	105	207	251	351	
	71	71.34	25	61458	162	0.0245	154	300	368	514	114	223	273	382	105	205	251	351	
	80	78.99	23	58786	140	0.0162	154	300	368	514	114	223	273	382	105	205	251	351	
	90	87.40	21	59983	129	0.0155	154	300	368	514	114	223	273	382	105	205	251	351	
	100	98.10	18	61458	118	0.0151	154	300	368	514	114	223	273	382	105	205	251	351	
	71	72.79	25	58786	152	0.0323	116	260	276	348	86	193	205	258	79	178	189	237	E4H (x4)
	80	81.83	22	58786	135	0.0316	116	249	276	332	86	185	205	247	79	170	189	227	
	90	90.55	20	59492	124	0.0310	116	245	276	327	86	182	205	243	79	167	189	223	
	100	104.15	17	58786	106	0.0200	116	242	276	323	86	180	205	240	79	165	189	220	
	112	117.09	15	58786	95	0.0197	116	231	276	309	86	172	205	230	79	158	189	211	
	125	129.55	14	59492	87	0.0193	116	228	276	305	86	169	205	226	79	156	189	208	
	140	145.42	12	59000	76	0.0191	116	216	276	291	86	161	205	214	79	148	189	197	
	160	162.62	11	58786	68	0.0123	116	213	276	290	86	158	205	211	79	146	189	194	
	180	179.94	10	59492	62	0.0122	116	210	276	289	86	156	205	208	79	143	189	192	
	200	201.97	9	59000	55	0.0121	116	203	276	289	86	148	205	198	79	136	189	182	
	224	231.44	8	58508	48	0.0069	116	203	276	289	86	148	205	198	79	136	189	182	
	250	260.19	7	59000	43	0.0068	116	202	276	289	86	147	205	196	79	135	189	180	
	280	287.90	6	59492	39	0.0068	116	202	276	289	86	145	205	194	79	133	189	178	
	315	323.14	6	59000	34	0.0067	116	202	276	289	86	143	205	190	79	131	189	175	
	355	364.27	5	59000	31	0.0039	116	202	276	289	86	141	205	188	79	130	189	173	
	400	403.06	4	59492	28	0.0039	116	202	276	289	86	139	205	185	79	127	189	170	
	450	452.40	4	59000	25	0.0039	116	202	276	289	86	135	205	181	79	124	189	166	

E2H / E3H / E4H ...36 — SPLIT HOUSING — 50 Hz — 68 kNm

	i_N	i_{eff}	n_2 [rpm]	T_{2N} [Nm]	P_N [kW]	J [Kgm²]	R1 P_{t0} [kW]				S5 P_{t0} [kW]				T6 P_{t0} [kW]				Type
									H_2O	$+H_2O$			H_2O	$+H_2O$			H_2O	$+H_2O$	
n_1 = 1000 rpm	5	5.05	198	59583	1236	0.7868	369	716	695	1042	275	532	517	774	252	489	475	711	E2H (x2)
	5.6	5.71	175	60667	1113	0.6489	357	692	672	1007	265	514	499	748	244	472	459	687	
	6.3	6.48	154	61750	998	0.5454	341	660	641	961	253	491	476	714	233	451	438	656	
	7.1	7.07	142	62292	923	0.4697	321	622	604	905	239	462	449	673	219	425	413	618	
	8	8.08	124	62833	815	0.4150	305	591	574	859	227	439	426	639	208	403	392	587	
	9	8.66	116	63375	767	0.3803	296	573	557	834	220	426	414	620	202	392	380	570	
	10	9.81	102	64458	688	0.3111	288	558	542	811	214	414	402	603	197	381	370	554	
	11.2	11.26	89	65000	604	0.2408	276	535	519	778	205	397	386	578	189	365	355	532	
	12.5	12.25	82	65542	560	0.2208	265	512	498	746	197	381	370	554	181	350	340	509	
	14	14.41	69	66625	484	0.1683	242	468	454	681	179	348	338	506	165	320	310	465	
	16	16.19	62	67167	434	0.1344	227	440	430	641	169	327	320	476	155	301	294	438	
	18	17.92	56	67708	396	0.1191	223	433	427	630	166	322	317	468	153	296	292	430	
	20	20.11	50	68250	355	0.0973	210	402	422	585	156	299	314	435	144	275	288	399	
	18	18.12	55	66625	385	0.2033	184	357	368	519	137	265	273	386	126	244	251	355	E3H (x3)
	20	20.37	49	67167	345	0.1804	175	339	368	494	130	252	273	367	120	232	251	337	
	22.4	22.54	44	67708	315	0.1598	172	334	368	486	128	248	273	361	118	228	251	332	
	25	25.93	39	66625	269	0.1106	170	329	368	478	126	244	273	355	116	224	251	327	
	28	29.15	34	67167	241	0.0995	162	313	368	456	120	233	273	339	110	214	251	311	
	31.5	32.25	31	67708	220	0.0894	160	309	368	450	119	230	273	334	109	211	251	307	
	35.5	36.20	28	68250	197	0.0823	154	292	368	437	114	217	273	325	105	199	251	298	
	40	40.49	25	67167	174	0.0678	154	283	368	437	114	211	273	325	105	194	251	298	
	45	44.80	22	67708	158	0.0626	154	280	368	437	114	208	273	325	105	191	251	298	
	50	50.28	20	68250	142	0.0589	154	265	368	437	114	197	273	325	105	181	251	298	
	56	57.62	17	66625	121	0.0328	154	246	368	437	114	183	273	325	105	168	251	298	
	63	64.78	15	67167	109	0.0305	154	236	368	437	114	175	273	325	105	161	251	298	
	71	71.68	14	67708	99	0.0284	154	233	368	437	114	173	273	325	105	159	251	298	
	80	80.45	12	68250	89	0.0270	154	224	368	437	114	166	273	325	105	153	251	298	
	90	89.07	11	67167	79	0.0183	154	223	368	437	114	166	273	325	105	152	251	298	
	100	98.55	10	67708	72	0.0172	154	223	368	437	114	166	273	325	105	152	251	298	
	112	110.62	9	68250	65	0.0164	154	223	368	437	114	166	273	325	105	152	251	298	
	80	82.08	12	65000	83	0.0325	116	204	276	296	86	151	205	220	79	139	189	202	E4H (x4)
	90	92.28	11	65542	74	0.0319	116	195	276	284	86	145	205	211	79	133	189	194	
	100	102.11	10	66083	68	0.0312	116	193	276	280	86	143	205	208	79	132	189	191	
	112	117.44	9	65000	58	0.0201	116	187	276	271	86	139	205	202	79	127	189	185	
	125	132.03	8	65542	52	0.0198	116	179	276	261	86	133	205	194	79	122	189	178	
	140	146.09	7	66083	47	0.0194	116	177	276	257	86	131	205	191	79	121	189	176	
	160	163.98	6	66625	43	0.0192	116	168	276	249	86	125	205	182	79	115	189	167	
	180	183.38	5	65542	37	0.0124	116	164	276	248	86	122	205	177	79	112	189	163	
	200	202.91	5	66083	34	0.0122	116	162	276	248	86	120	205	175	79	111	189	161	
	224	227.75	4	66625	31	0.0121	116	155	276	248	86	115	205	167	79	105	189	153	
	250	260.99	4	65000	26	0.0069	116	152	276	248	86	110	205	160	79	101	189	147	
	280	293.41	3	65542	23	0.0068	116	150	276	248	86	106	205	154	79	98	189	142	
	315	324.65	3	66625	21	0.0001	116	150	276	248	86	105	205	152	79	96	189	140	
	355	364.40	3	66625	19	0.0067	116	150	276	248	86	100	205	145	79	92	189	134	
	400	410.77	2	65542	17	0.0038	116	150	276	248	86	97	205	141	79	89	189	129	
	450	454.51	2	66083	15	0.0039	116	150	276	248	86	95	205	140	79	87	189	127	
	500	510.16	2	66625	14	0.0039	116	150	276	248	86	91	205	137	79	84	189	122	

E2H / E3H / E4H ...36 SPLIT HOUSING 50 Hz 68 kNm

n_1 = 1500 rpm

i_N	i_{eff}	n_2 [rpm]	T_{2N} [Nm]	P_N [kW]	J [Kgm²]	R1 P_{t0} [kW]	R1	R1 H_2O	R1 +H_2O	S5 P_{t0} [kW]	S5	S5 H_2O	S5 +H_2O	T6 P_{t0} [kW]	T6	T6 H_2O	T6 +H_2O	Type
5	5.05	297	59583	1854	0.7868	346	958	651	1263	257	712	484	938	236	654	445	863	
5.6	5.71	263	60667	1669	0.6489	337	933	634	1230	250	693	471	914	230	637	433	840	
6.3	6.48	232	61750	1497	0.5454	324	896	609	1182	241	666	453	878	221	612	416	807	
7.1	7.07	212	62292	1385	0.4697	307	849	577	1119	228	630	429	831	209	580	394	764	
8	8.08	186	62833	1222	0.4150	293	810	551	1068	218	602	409	794	200	553	376	730	
9	8.66	173	63375	1150	0.3803	285	789	536	1040	212	586	399	773	195	539	366	711	E2H (x2)
10	9.81	153	64458	1032	0.3111	279	771	524	1017	207	573	389	755	190	527	358	694	
11.2	11.26	133	65000	906	0.2408	268	743	505	979	199	552	375	727	183	507	345	669	
12.5	12.25	122	65542	840	0.2208	257	713	484	940	191	529	360	698	176	487	331	642	
14	14.41	104	66625	726	0.1683	235	651	442	858	175	484	329	638	161	445	302	586	
16	16.19	93	67167	651	0.1344	221	612	425	807	164	455	316	600	151	418	290	551	
18	17.92	84	67708	593	0.1191	217	601	422	793	161	447	314	589	148	411	288	542	
20	20.11	75	68250	533	0.0973	207	556	422	734	154	413	314	545	142	380	288	501	
18	18.12	83	66625	577	0.2033	177	489	368	645	131	363	273	479	121	334	251	441	
20	20.37	74	67167	518	0.1804	168	464	368	612	125	345	273	455	114	317	251	418	
22.4	22.54	67	67708	472	0.1598	165	456	368	601	122	339	273	446	112	311	251	410	
25	25.93	58	66625	404	0.1106	164	454	368	599	122	338	273	445	112	310	251	409	
28	29.15	51	67167	362	0.0995	156	432	368	569	116	321	273	423	107	295	251	389	
31.5	32.25	47	67708	330	0.0894	155	425	368	560	115	316	273	416	106	290	251	383	
35.5	36.20	41	68250	296	0.0823	154	399	368	527	114	297	273	391	105	273	251	360	
40	40.49	37	67167	261	0.0678	154	395	368	520	114	293	273	387	105	270	251	355	E3H (x3)
45	44.80	33	67708	237	0.0626	154	390	368	517	114	289	273	384	105	266	251	353	
50	50.28	30	68250	213	0.0589	154	368	368	514	114	273	273	382	105	251	251	351	
56	57.62	26	66625	182	0.0328	154	345	368	514	114	257	273	382	105	236	251	351	
63	64.78	23	67167	163	0.0305	154	330	368	514	114	245	273	382	105	226	251	351	
71	71.68	21	67708	148	0.0284	154	326	368	514	114	242	273	382	105	223	251	351	
80	80.45	19	68250	133	0.0270	154	309	368	514	114	230	273	382	105	211	251	351	
90	89.07	17	67167	118	0.0183	154	300	368	514	114	223	273	382	105	205	251	351	
100	98.55	15	67708	108	0.0172	154	300	368	514	114	223	273	382	105	205	251	351	
112	110.62	14	68250	97	0.0164	154	300	368	514	114	223	273	382	105	205	251	351	
80	82.08	18	65000	124	0.0325	116	283	276	373	86	210	205	277	79	193	189	255	
90	92.28	16	65542	112	0.0319	116	271	276	358	86	201	205	266	79	185	189	244	
100	102.11	15	66083	102	0.0312	116	267	276	352	86	199	205	262	79	183	189	241	
112	117.44	13	65000	87	0.0201	116	261	276	344	86	194	205	255	79	178	189	235	
125	132.03	11	65542	78	0.0198	116	250	276	330	86	186	205	245	79	171	189	225	
140	146.09	10	66083	71	0.0194	116	246	276	325	86	183	205	241	79	168	189	222	
160	163.98	9	66625	64	0.0192	116	234	276	309	86	174	205	230	79	160	189	211	
180	183.38	8	65542	56	0.0124	116	229	276	302	86	170	205	225	79	157	189	206	E4H (x4)
200	202.91	7	66083	51	0.0122	116	226	276	298	86	168	205	221	79	154	189	204	
224	227.75	7	66625	46	0.0121	116	215	276	291	86	160	205	211	79	147	189	194	
250	260.99	6	65000	39	0.0069	116	207	276	289	86	153	205	202	79	141	189	185	
280	293.41	5	65542	35	0.0068	116	203	276	289	86	147	205	194	79	135	189	178	
315	324.65	5	66625	32	0.0001	116	202	276	289	86	145	205	191	79	133	189	176	
355	364.40	4	66625	29	0.0067	116	202	276	289	86	138	205	182	79	127	189	167	
400	410.77	4	65542	25	0.0038	116	202	276	289	86	132	205	174	79	122	189	160	
450	454.51	3	66083	23	0.0039	116	202	276	289	86	130	205	172	79	120	189	158	
500	510.16	3	66625	21	0.0039	116	202	276	289	86	124	205	164	79	114	189	151	

E2H / E3H / E4H ...36 — SPLIT HOUSING — 60 Hz — 68 kNm

	i_N	i_{eff}	n_2 [rpm]	T_{2N} [Nm]	P_N [kW]	J [Kgm²]	R1 P_{t0} [kW]	R1	R1 H_2O	R1 +H_2O	S5 P_{t0} [kW]	S5	S5 H_2O	S5 +H_2O	T6 P_{t0} [kW]	T6	T6 H_2O	T6 +H_2O	Type
n_1 = 1200 rpm	5	5.05	238	59583	1483	0.7868	359	816	676	1132	267	606	502	841	245	557	462	773	
	5.6	5.71	210	60667	1336	0.6489	348	791	656	1098	259	587	487	816	238	540	448	750	
	6.3	6.48	185	61750	1198	0.5454	333	757	627	1051	248	562	466	781	228	517	429	718	
	7.1	7.07	170	62292	1108	0.4697	315	715	592	992	234	531	440	737	215	488	405	678	
	8	8.08	149	62833	978	0.4150	300	680	564	944	223	505	419	702	205	465	385	645	
	9	8.66	139	63375	920	0.3803	291	661	548	918	216	491	407	682	199	452	374	627	E2H (x2)
	10	9.81	122	64458	825	0.3111	284	644	534	895	211	479	397	665	194	440	365	611	
	11.2	11.26	107	65000	725	0.2408	273	619	513	859	203	460	381	639	186	423	351	587	
	12.5	12.25	98	65542	672	0.2208	261	593	492	824	194	441	366	612	179	405	336	563	
	14	14.41	83	66625	581	0.1683	239	542	449	752	177	402	334	559	163	370	307	514	
	16	16.19	74	67167	521	0.1344	224	509	428	707	167	378	318	525	153	348	292	483	
	18	17.92	67	67708	475	0.1191	220	500	424	695	164	372	315	516	151	342	290	474	
	20	20.11	60	68250	426	0.0973	209	464	422	644	155	344	314	478	143	317	288	440	
	18	18.12	66	66625	462	0.2033	181	410	368	570	134	305	273	423	124	280	251	389	
	20	20.37	59	67167	414	0.1804	172	390	368	541	128	289	273	402	117	266	251	369	
	22.4	22.54	53	67708	377	0.1598	169	383	368	532	125	285	273	395	115	262	251	363	
	25	25.93	46	66625	323	0.1106	167	380	368	527	124	282	273	392	114	259	251	360	
	28	29.15	41	67167	290	0.0995	159	361	368	502	118	268	273	373	109	247	251	343	
	31.5	32.25	37	67708	264	0.0894	157	356	368	495	117	265	273	368	107	243	251	338	
	35.5	36.20	33	68250	237	0.0823	154	336	368	466	114	249	273	346	105	229	251	318	
	40	40.49	30	67167	208	0.0678	154	329	368	456	114	244	273	339	105	224	251	312	E3H (x3)
	45	44.80	27	67708	190	0.0626	154	325	368	451	114	241	273	335	105	222	251	308	
	50	50.28	24	68250	171	0.0589	154	307	368	437	114	228	273	325	105	210	251	298	
	56	57.62	21	66625	145	0.0328	154	286	368	437	114	212	273	325	105	195	251	298	
	63	64.78	19	67167	130	0.0305	154	274	368	437	114	203	273	325	105	187	251	298	
	71	71.68	17	67708	119	0.0284	154	271	368	437	114	201	273	325	105	185	251	298	
	80	80.45	15	68250	107	0.0270	154	257	368	437	114	191	273	325	105	175	251	298	
	90	89.07	13	67167	95	0.0183	154	247	368	437	114	183	273	325	105	169	251	298	
	100	98.55	12	67708	86	0.0172	154	243	368	437	114	181	273	325	105	166	251	298	
	112	110.62	11	68250	78	0.0164	154	231	368	437	114	171	273	325	105	158	251	298	
	80	82.08	15	65000	100	0.0325	116	236	276	327	86	175	205	243	79	161	189	223	
	90	92.28	13	65542	89	0.0319	116	226	276	314	86	168	205	233	79	154	189	214	
	100	102.11	12	66083	81	0.0312	116	223	276	309	86	165	205	230	79	152	189	211	
	112	117.44	10	65000	70	0.0201	116	216	276	301	86	161	205	223	79	148	189	205	
	125	132.03	9	65542	62	0.0198	116	208	276	288	86	154	205	214	79	142	189	197	
	140	146.09	8	66083	57	0.0194	116	205	276	284	86	152	205	211	79	140	189	194	
	160	163.98	7	66625	51	0.0192	116	195	276	271	86	145	205	201	79	133	189	185	
	180	183.38	7	65542	45	0.0124	116	190	276	264	86	141	205	196	79	130	189	180	E4H (x4)
	200	202.91	6	66083	41	0.0122	116	188	276	261	86	139	205	194	79	128	189	178	
	224	227.75	5	66625	37	0.0121	116	179	276	252	86	133	205	185	79	122	189	170	
	250	260.99	5	65000	31	0.0069	116	171	276	248	86	127	205	177	79	117	189	162	
	280	293.41	4	65542	28	0.0068	116	165	276	248	86	122	205	170	79	113	189	156	
	315	324.65	4	66625	26	0.0001	116	163	276	248	86	121	205	168	79	111	189	154	
	355	364.40	3	66625	23	0.0067	116	155	276	248	86	115	205	160	79	106	189	147	
	400	410.77	3	65542	20	0.0038	116	152	276	248	86	111	205	154	79	102	189	141	
	450	454.51	3	66083	18	0.0039	116	151	276	248	86	109	205	152	79	100	189	139	
	500	510.16	2	66625	16	0.0039	116	150	276	248	86	104	205	145	79	96	189	133	

E2H / E3H / E4H ...36 — SPLIT HOUSING — 60 Hz — 68 kNm

n_1 = 1800 rpm

i_N	i_{eff}	n_2 [rpm]	T_{2N} [Nm]	P_N [kW]	J [Kgm²]	R1 P_{t0} [kW]	R1	R1 H_2O	R1 +H_2O	S5 P_{t0} [kW]	S5	S5 H_2O	S5 +H_2O	T6 P_{t0} [kW]	T6	T6 H_2O	T6 +H_2O	Type
5	5.05	357	59583	2225	0.7868	334	979	628	1273	248	727	467	946	228	669	429	870	
5.6	5.71	315	60667	2003	0.6489	327	958	615	1246	243	712	457	926	223	655	420	851	
6.3	6.48	278	61750	1797	0.5454	315	925	593	1203	234	687	441	894	215	632	405	821	
7.1	7.07	255	62292	1661	0.4697	299	878	563	1141	222	652	418	848	204	599	384	780	
8	8.08	223	62833	1466	0.4150	286	840	539	1093	213	624	400	812	196	574	368	746	
9	8.66	208	63375	1380	0.3803	279	819	526	1066	208	609	390	792	191	560	359	728	E2H (x2)
10	9.81	183	64458	1238	0.3111	274	803	515	1044	203	596	382	776	187	548	352	713	
11.2	11.26	160	65000	1088	0.2408	264	775	497	1007	196	575	369	748	180	529	339	688	
12.5	12.25	147	65542	1009	0.2208	254	744	477	968	188	553	355	719	173	508	326	661	
14	14.41	125	66625	872	0.1683	232	681	437	885	172	506	324	658	159	465	298	605	
16	16.19	111	67167	782	0.1344	219	641	423	834	162	476	314	620	149	438	289	569	
18	17.92	100	67708	712	0.1191	215	630	422	819	160	468	314	609	147	430	288	560	
20	20.11	89	68250	640	0.0973	207	583	422	758	154	433	314	563	141	398	288	517	
18	18.12	99	66625	693	0.2033	173	508	368	661	129	378	273	491	118	347	251	452	
20	20.37	88	67167	621	0.1804	164	482	368	627	122	358	273	466	112	329	251	428	
22.4	22.54	80	67708	566	0.1598	161	473	368	615	120	352	273	457	110	323	251	420	
25	25.93	69	66625	484	0.1106	162	474	368	616	120	352	273	458	110	324	251	421	
28	29.15	62	67167	434	0.0995	154	450	368	585	115	334	273	435	106	307	251	399	
31.5	32.25	56	67708	396	0.0894	154	442	368	575	114	329	273	427	105	302	251	393	
35.5	36.20	50	68250	355	0.0823	154	415	368	539	114	308	273	401	105	283	251	368	
40	40.49	44	67167	313	0.0678	154	412	368	536	114	306	273	398	105	282	251	366	E3H (x3)
45	44.80	40	67708	285	0.0626	154	406	368	528	114	302	273	393	105	278	251	361	
50	50.28	36	68250	256	0.0589	154	383	368	514	114	284	273	382	105	261	251	351	
56	57.62	31	66625	218	0.0328	154	363	368	514	114	269	273	382	105	248	251	351	
63	64.78	28	67167	195	0.0305	154	347	368	514	114	257	273	382	105	237	251	351	
71	71.68	25	67708	178	0.0284	154	342	368	514	114	254	273	382	105	234	251	351	
80	80.45	22	68250	160	0.0270	154	324	368	514	114	241	273	382	105	221	251	351	
90	89.07	20	67167	142	0.0183	154	311	368	514	114	231	273	382	105	212	251	351	
100	98.55	18	67708	129	0.0172	154	307	368	514	114	228	273	382	105	209	251	351	
112	110.62	16	68250	116	0.0164	154	300	368	514	114	223	273	382	105	205	251	351	
80	82.08	22	65000	149	0.0325	116	296	276	385	86	220	205	286	79	202	189	263	
90	92.28	20	65542	134	0.0319	116	284	276	369	86	211	205	274	79	194	189	252	
100	102.11	18	66083	122	0.0312	116	279	276	363	86	207	205	270	79	191	189	248	
112	117.44	15	65000	104	0.0201	116	273	276	355	86	203	205	264	79	187	189	243	
125	132.03	14	65542	94	0.0198	116	262	276	340	86	195	205	253	79	179	189	233	
140	146.09	12	66083	85	0.0194	116	258	276	335	86	192	205	249	79	176	189	229	
160	163.98	11	66625	77	0.0192	116	245	276	319	86	182	205	237	79	167	189	218	
180	183.38	10	65542	67	0.0124	116	240	276	313	86	179	205	232	79	164	189	214	E4H (x4)
200	202.91	9	66083	61	0.0122	116	237	276	308	86	176	205	229	79	162	189	211	
224	227.75	8	66625	55	0.0121	116	226	276	295	86	168	205	218	79	154	189	200	
250	260.99	7	65000	47	0.0069	116	216	276	289	86	160	205	209	79	147	189	192	
280	293.41	6	65542	42	0.0068	116	208	276	289	86	154	205	200	79	142	189	184	
315	324.65	6	66625	39	0.0001	116	206	276	289	86	152	205	197	79	140	189	181	
355	364.40	5	66625	34	0.0067	116	202	276	289	86	144	205	188	79	133	189	173	
400	410.77	4	65542	30	0.0038	116	202	276	289	86	138	205	179	79	127	189	165	
450	454.51	4	66083	27	0.0039	116	202	276	289	86	136	205	177	79	125	189	162	
500	510.16	4	66625	25	0.0039	116	202	276	289	86	129	205	168	79	119	189	155	

E2H / E3H / E4H ...40 — SPLIT HOUSING — 50 Hz — 89 kNm

	i_N	i_{eff}	n_2 [rpm]	T_{2N} [Nm]	P_N [kW]	J [Kgm²]	R1 P_{t0} [kW]	R1	R1 H_2O	R1 +H_2O	S5 P_{t0} [kW]	S5	S5 H_2O	S5 +H_2O	T6 P_{t0} [kW]	T6	T6 H_2O	T6 +H_2O	Type
n_1 = 1000 rpm	**5**	5.24	191	87173	1743	1.1442	454	887	1189	1622	338	659	883	1205	310	606	812	1108	**E2H** (x2)
	5.6	5.90	169	88543	1570	0.9437	441	861	1154	1575	328	640	858	1170	301	588	788	1076	
	6.3	6.68	150	88543	1389	0.7895	426	832	1115	1521	317	618	828	1130	291	568	761	1039	
	7.1	7.58	132	88543	1224	0.6375	406	794	1063	1451	302	590	790	1078	278	542	726	991	
	8	8.27	121	88543	1122	0.5975	382	746	1000	1365	284	555	743	1014	261	510	683	932	
	9	9.45	106	86865	963	0.4881	363	709	950	1296	270	527	706	963	248	484	649	885	
	10	10.13	99	86865	898	0.4395	352	688	922	1258	262	511	685	935	241	470	630	859	
	11.2	11.48	87	86865	792	0.3485	343	670	898	1225	255	498	667	910	234	458	613	837	
	12.5	13.18	76	86865	690	0.2860	330	644	863	1177	245	478	641	874	225	440	589	804	
	14	14.33	70	86865	635	0.2500	316	617	826	1127	235	458	614	838	216	421	564	770	
	16	16.85	59	85202	529	0.1851	288	562	754	1028	214	418	560	764	197	384	515	702	
	18	18.94	53	85202	471	0.1584	271	529	720	967	202	393	535	718	185	361	492	660	
	20	20.96	48	80311	401	0.1330	269	519	714	948	200	385	530	704	184	354	488	648	
	22.4	23.53	42	78713	350	0.1167	265	485	713	886	197	360	530	658	181	331	487	605	
	20	21.20	47	80975	400	0.1716	219	428	634	782	163	318	471	581	150	292	433	534	**E3H** (x3)
	22.4	23.83	42	85202	374	0.1553	209	408	634	745	155	303	471	554	143	278	433	509	
	25	26.37	38	80311	319	0.1393	205	400	634	731	152	297	471	543	140	273	433	499	
	28	30.33	33	85202	294	0.0951	202	395	634	721	150	293	471	536	138	269	433	493	
	31.5	34.10	29	83556	257	0.0872	192	376	634	712	143	279	471	529	131	256	433	486	
	35.5	37.73	27	78713	218	0.0793	189	370	634	712	141	275	471	529	129	252	433	486	
	40	42.35	24	80975	200	0.0743	179	349	634	712	133	260	471	529	122	239	433	486	
	45	47.36	21	83556	185	0.0614	177	339	634	712	132	252	471	529	121	232	433	486	
	50	52.40	19	78713	157	0.0574	177	334	634	712	132	248	471	529	121	228	433	486	
	56	58.82	17	80975	144	0.0548	177	317	634	712	132	236	471	529	121	217	433	486	
	63	67.41	15	83556	130	0.0296	177	294	634	712	132	219	471	529	121	201	433	486	
	71	75.78	13	81926	113	0.0280	177	282	634	712	132	209	471	529	121	192	433	486	
	80	83.85	12	79000	99	0.0264	177	278	634	712	132	207	471	529	121	190	433	486	
	90	94.11	11	80975	90	0.0254	177	264	634	712	132	196	471	529	121	181	433	486	
	100	104.19	10	81926	82	0.0170	177	257	634	712	132	191	471	529	121	176	433	486	
	112	115.29	9	79000	72	0.0161	177	255	634	712	132	189	471	529	121	174	433	486	
	125	129.41	8	80975	66	0.0156	177	255	634	712	132	189	471	529	121	174	433	486	
	100	96.02	10	81926	89	0.0331	132	244	475	446	98	181	353	331	90	166	324	304	**E4H** (x4)
	112	107.95	9	80311	78	0.0323	132	233	475	427	98	173	353	317	90	159	324	292	
	125	119.45	8	78342	69	0.0315	132	230	475	420	98	171	353	312	90	157	324	287	
	140	137.39	7	81926	62	0.0204	132	224	475	409	98	166	353	304	90	153	324	279	
	160	154.45	6	80311	54	0.0200	132	215	475	401	98	160	353	292	90	147	324	268	
	180	170.90	6	78342	48	0.0196	132	212	475	401	98	157	353	287	90	144	324	264	
	200	191.82	5	80317	44	0.0194	132	202	475	401	98	150	353	274	90	138	324	252	
	224	214.52	5	80311	39	0.0125	132	197	475	401	98	146	353	267	90	134	324	246	
	250	237.36	4	78342	35	0.0123	132	195	475	401	98	144	353	263	90	132	324	242	
	280	266.42	4	80317	32	0.0122	132	192	475	401	98	138	353	251	90	126	324	231	
	315	305.31	3	80311	28	0.0070	132	192	475	401	98	138	353	252	90	127	324	232	
	355	343.23	3	78713	24	0.0069	132	192	475	401	98	137	353	250	90	126	324	230	
	400	379.78	3	78108	22	0.0068	132	192	475	401	98	136	353	248	90	125	324	228	
	450	426.28	2	77683	19	0.0068	132	192	475	401	98	134	353	246	90	124	324	226	
	500	480.52	2	78713	17	0.0040	132	192	475	401	98	134	353	245	90	123	324	225	
	560	531.69	2	78342	15	0.0039	132	192	475	401	98	132	353	241	90	121	324	222	
	630	596.79	2	77683	14	0.0039	132	192	475	401	98	129	353	237	90	119	324	217	

E2H / E3H / E4H ...40 — SPLIT HOUSING — 50 Hz — 89 kNm

n_1 = 1500 rpm

i_N	i_{eff}	n_2 [rpm]	T_{2N} [Nm]	P_N [kW]	J [Kgm²]	R1 P_{t0} [kW]	R1	R1 H_2O	R1 $+H_2O$	S5 P_{t0} [kW]	S5	S5 H_2O	S5 $+H_2O$	T6 P_{t0} [kW]	T6	T6 H_2O	T6 $+H_2O$	Type
5	5.24	287	87173	2615	1.1442	426	1188	1114	1876	316	882	828	1394	291	811	761	1281	
5.6	5.90	254	88543	2355	0.9437	416	1161	1089	1834	309	863	809	1363	284	793	744	1253	
6.3	6.68	225	88543	2083	0.7895	404	1127	1057	1780	300	837	786	1323	276	770	722	1216	
7.1	7.58	198	88543	1835	0.6375	387	1080	1013	1706	288	803	753	1268	264	738	692	1165	
8	8.27	181	88543	1682	0.5975	365	1019	956	1610	272	757	711	1196	250	696	653	1100	
9	9.45	159	86865	1444	0.4881	349	972	912	1536	259	722	678	1141	238	664	623	1049	
10	10.13	148	86865	1347	0.4395	339	946	888	1495	252	703	660	1111	232	646	606	1021	E2H (x2)
11.2	11.48	131	86865	1188	0.3485	332	926	868	1462	247	688	645	1086	227	632	593	999	
12.5	13.18	114	86865	1036	0.2860	320	893	837	1410	238	663	622	1048	219	610	572	963	
14	14.33	105	86865	952	0.2500	307	857	804	1353	228	636	597	1005	210	585	549	924	
16	16.85	89	85202	794	0.1851	280	781	733	1234	208	581	545	917	191	534	501	843	
18	18.94	79	85202	706	0.1584	268	734	713	1160	199	546	530	862	183	502	487	792	
20	20.96	72	80311	602	0.1330	265	718	713	1135	197	534	530	843	181	491	487	775	
22.4	23.53	64	78713	525	0.1167	265	671	713	1059	197	498	530	787	181	458	487	724	
20	21.20	71	80975	600	0.1716	210	585	634	925	156	435	471	687	143	400	433	632	
22.4	23.83	63	85202	562	0.1553	200	558	634	881	148	414	471	654	137	381	433	602	
25	26.37	57	80311	478	0.1393	195	545	634	860	145	405	471	639	133	372	433	588	
28	30.33	49	85202	441	0.0951	196	546	634	862	145	406	471	641	134	373	433	589	
31.5	34.10	44	83556	385	0.0872	186	518	634	818	138	385	471	608	127	354	433	559	
35.5	37.73	40	78713	328	0.0793	182	507	634	805	135	377	471	598	124	346	433	550	
40	42.35	35	80975	300	0.0743	177	478	634	800	132	355	471	594	121	326	433	546	
45	47.36	32	83556	277	0.0614	177	473	634	800	132	351	471	594	121	323	433	546	E3H (x3)
50	52.40	29	78713	236	0.0574	177	465	634	800	132	345	471	594	121	317	433	546	
56	58.82	26	80975	216	0.0548	177	439	634	800	132	327	471	594	121	300	433	546	
63	67.41	22	83556	195	0.0296	177	413	634	800	132	307	471	594	121	282	433	546	
71	75.78	20	81926	170	0.0280	177	395	634	800	132	293	471	594	121	269	433	546	
80	83.85	18	79000	148	0.0264	177	389	634	800	132	289	471	594	121	266	433	546	
90	94.11	16	80975	135	0.0254	177	369	634	800	132	274	471	594	121	252	433	546	
100	104.19	14	81926	123	0.0170	177	354	634	800	132	263	471	594	121	242	433	546	
112	115.29	13	79000	108	0.0161	177	348	634	800	132	259	471	594	121	238	433	546	
125	129.41	12	80975	98	0.0156	177	343	634	800	132	255	471	594	121	234	433	546	
100	96.02	16	81926	134	0.0331	132	337	475	533	98	251	353	396	90	230	324	364	
112	107.95	14	80311	117	0.0323	132	322	475	509	98	239	353	378	90	220	324	348	
125	119.45	13	78342	103	0.0315	132	317	475	500	98	235	353	372	90	216	324	342	
140	137.39	11	81926	94	0.0204	132	312	475	492	98	232	353	366	90	213	324	336	
160	154.45	10	80311	82	0.0200	132	298	475	471	98	222	353	350	90	204	324	322	
180	170.90	9	78342	72	0.0196	132	293	475	464	98	218	353	344	90	200	324	317	
200	191.82	8	80317	66	0.0194	132	279	475	450	98	208	353	328	90	191	324	301	
224	214.52	7	80311	59	0.0125	132	274	475	450	98	203	353	321	90	187	324	295	
250	237.36	6	78342	52	0.0123	132	269	475	450	98	200	353	316	90	184	324	291	E4H (x4)
280	266.42	6	80317	47	0.0122	132	261	475	450	98	191	353	302	90	176	324	277	
315	305.31	5	80311	41	0.0070	132	261	475	450	98	191	353	302	90	176	324	277	
355	343.23	4	78713	36	0.0069	132	259	475	450	98	189	353	298	90	174	324	274	
400	379.78	4	78108	32	0.0068	132	258	475	450	98	187	353	295	90	172	324	271	
450	426.28	4	77683	29	0.0068	132	258	475	450	98	184	353	291	90	169	324	267	
500	480.52	3	78713	26	0.0040	132	258	475	450	98	183	353	288	90	168	324	265	
560	531.69	3	78342	23	0.0039	132	258	475	450	98	179	353	283	90	165	324	261	
630	596.79	3	77683	20	0.0039	132	258	475	450	98	175	353	277	90	161	324	254	

E2H / E3H / E4H ...40 — SPLIT HOUSING — 60 Hz — 89 kNm

	i_N	i_{eff}	n_2 [rpm]	T_{2N} [Nm]	P_N [kW]	J [Kgm²]	R1 P_{t0} [kW]	R1	R1 H_2O	R1 +H_2O	S5 P_{t0} [kW]	S5	S5 H_2O	S5 +H_2O	T6 P_{t0} [kW]	T6	T6 H_2O	T6 +H_2O	Type
n_1 = 1200 rpm	5	5.24	229	87173	2092	1.1442	442	1011	1156	1725	328	751	859	1282	302	690	790	1178	E2H x2
	5.6	5.90	203	88543	1884	0.9437	430	984	1125	1679	320	731	836	1248	294	672	769	1147	
	6.3	6.68	180	88543	1666	0.7895	416	952	1089	1625	309	707	809	1207	284	650	744	1110	
	7.1	7.58	158	88543	1468	0.6375	398	910	1041	1553	296	676	774	1154	272	622	711	1061	
	8	8.27	145	88543	1346	0.5975	375	857	981	1463	278	637	729	1087	256	586	670	1000	
	9	9.45	127	86865	1155	0.4881	357	816	933	1393	265	606	694	1035	244	557	638	951	
	10	10.13	118	86865	1078	0.4395	347	793	907	1354	258	589	674	1006	237	542	620	925	
	11.2	11.48	105	86865	951	0.3485	338	774	885	1321	251	575	658	982	231	529	605	902	
	12.5	13.18	91	86865	828	0.2860	326	745	852	1271	242	553	633	944	222	509	582	868	
	14	14.33	84	86865	762	0.2500	312	714	816	1218	232	530	607	905	213	487	558	832	
	16	16.85	71	85202	635	0.1851	284	651	744	1110	211	483	553	825	194	444	508	758	
	18	18.94	63	85202	565	0.1584	270	611	715	1043	200	454	532	775	184	417	489	713	
	20	20.96	57	80311	481	0.1330	267	599	713	1022	199	445	530	759	183	409	487	698	
	22.4	23.53	51	78713	420	0.1167	265	559	713	954	197	415	530	709	181	382	487	651	
	20	21.20	57	80975	480	0.1716	215	492	634	839	160	365	471	623	147	336	433	573	E3H x3
	22.4	23.83	50	85202	449	0.1553	205	468	634	799	152	348	471	594	140	320	433	546	
	25	26.37	46	80311	383	0.1393	200	458	634	782	149	341	471	581	137	313	433	534	
	28	30.33	40	85202	353	0.0951	199	456	634	778	148	339	471	578	136	311	433	532	
	31.5	34.10	35	83556	308	0.0872	189	433	634	740	141	322	471	550	129	296	433	505	
	35.5	37.73	32	78713	262	0.0793	186	426	634	727	138	316	471	540	127	291	433	496	
	40	42.35	28	80975	240	0.0743	177	402	634	712	132	298	471	529	121	274	433	486	
	45	47.36	25	83556	222	0.0614	177	394	634	712	132	292	471	529	121	269	433	486	
	50	52.40	23	78713	189	0.0574	177	388	634	712	132	288	471	529	121	265	433	486	
	56	58.82	20	80975	173	0.0548	177	367	634	712	132	273	471	529	121	251	433	486	
	63	67.41	18	83556	156	0.0296	177	342	634	712	132	254	471	529	121	234	433	486	
	71	75.78	16	81926	136	0.0280	177	327	634	712	132	243	471	529	121	223	433	486	
	80	83.85	14	79000	118	0.0264	177	323	634	712	132	240	471	529	121	220	433	486	
	90	94.11	13	80975	108	0.0254	177	306	634	712	132	228	471	529	121	209	433	486	
	100	104.19	12	81926	99	0.0170	177	295	634	712	132	219	471	529	121	201	433	486	
	112	115.29	10	79000	86	0.0161	177	290	634	712	132	215	471	529	121	198	433	486	
	125	129.41	9	80975	79	0.0156	177	275	634	712	132	204	471	529	121	188	433	486	
	100	96.02	12	81926	107	0.0331	132	282	475	481	98	209	353	357	90	192	324	328	E4H x4
	112	107.95	11	80311	93	0.0323	132	269	475	460	98	200	353	342	90	184	324	314	
	125	119.45	10	78342	82	0.0315	132	265	475	452	98	197	353	336	90	181	324	309	
	140	137.39	9	81926	75	0.0204	132	259	475	442	98	193	353	329	90	177	324	302	
	160	154.45	8	80311	65	0.0200	132	248	475	424	98	185	353	315	90	170	324	290	
	180	170.90	7	78342	58	0.0196	132	245	475	418	98	182	353	310	90	167	324	285	
	200	191.82	6	80317	53	0.0194	132	233	475	402	98	173	353	296	90	159	324	272	
	224	214.52	6	80311	47	0.0125	132	228	475	401	98	169	353	289	90	156	324	265	
	250	237.36	5	78342	41	0.0123	132	224	475	401	98	167	353	284	90	153	324	262	
	280	266.42	5	80317	38	0.0122	132	214	475	401	98	159	353	271	90	146	324	250	
	315	305.31	4	80311	33	0.0070	132	215	475	401	98	159	353	272	90	147	324	250	
	355	343.23	3	78713	29	0.0069	132	213	475	401	98	158	353	270	90	145	324	248	
	400	379.78	3	78108	26	0.0068	132	211	475	401	98	156	353	267	90	144	324	246	
	450	426.28	3	77683	23	0.0068	132	208	475	401	98	155	353	264	90	142	324	242	
	500	480.52	2	78713	21	0.0040	132	207	475	401	98	154	353	262	90	141	324	241	
	560	531.69	2	78342	19	0.0039	132	204	475	401	98	151	353	258	90	139	324	237	
	630	596.79	2	77683	16	0.0039	132	199	475	401	98	148	353	253	90	136	324	232	

E2H / E3H / E4H ...40 — SPLIT HOUSING — 60 Hz — 89 kNm

n_1 = 1800 rpm

i_N	i_{eff}	n_2 [rpm]	T_{2N} [Nm]	P_N [kW]	J [Kgm²]	R1 P_{t0} [kW]	R1	R1 H_2O	R1 +H_2O	S5 P_{t0} [kW]	S5	S5 H_2O	S5 +H_2O	T6 P_{t0} [kW]	T6	T6 H_2O	T6 +H_2O	Type
5	5.24	344	87173	3138	1.1442	411	1215	1075	1879	305	903	799	1396	281	830	734	1284	
5.6	5.90	305	88543	2826	0.9437	404	1194	1056	1846	300	887	785	1372	276	815	722	1261	
6.3	6.68	270	88543	2499	0.7895	393	1163	1029	1799	292	864	765	1337	269	794	703	1229	
7.1	7.58	238	88543	2202	0.6375	378	1118	989	1729	281	830	735	1285	258	763	676	1181	
8	8.27	218	88543	2019	0.5975	357	1057	935	1635	266	785	695	1214	244	722	639	1116	
9	9.45	191	86865	1733	0.4881	341	1009	893	1561	254	750	664	1160	233	689	610	1066	
10	10.13	178	86865	1617	0.4395	333	984	870	1521	247	731	647	1130	227	672	594	1039	E2H (x2)
11.2	11.48	157	86865	1426	0.3485	326	963	853	1490	242	716	634	1107	223	658	582	1018	
12.5	13.18	137	86865	1243	0.2860	315	931	824	1440	234	692	612	1070	215	636	563	983	
14	14.33	126	86865	1143	0.2500	302	894	791	1383	225	664	588	1028	207	611	540	945	
16	16.85	107	85202	953	0.1851	276	817	728	1263	205	607	541	939	189	558	497	863	
18	18.94	95	85202	848	0.1584	266	768	713	1189	198	571	530	883	182	525	487	812	
20	20.96	86	80311	722	0.1330	265	752	713	1163	197	558	530	864	181	513	487	794	
22.4	23.53	76	78713	631	0.1167	265	702	713	1086	197	522	530	807	181	479	487	742	
20	21.20	85	80975	720	0.1716	206	608	634	940	153	452	471	699	140	415	433	642	
22.4	23.83	76	85202	674	0.1553	196	579	634	896	146	430	471	666	134	396	433	612	
25	26.37	68	80311	574	0.1393	191	565	634	874	142	420	471	649	130	386	433	597	
28	30.33	59	85202	529	0.0951	193	569	634	881	143	423	471	654	132	389	433	602	
31.5	34.10	53	83556	462	0.0872	182	539	634	834	135	401	471	620	125	368	433	570	
35.5	37.73	48	78713	393	0.0793	179	527	634	815	133	392	471	606	122	360	433	557	
40	42.35	43	80975	360	0.0743	177	496	634	800	132	369	471	594	121	339	433	546	
45	47.36	38	83556	333	0.0614	177	494	634	800	132	367	471	594	121	337	433	546	E3H (x3)
50	52.40	34	78713	283	0.0574	177	484	634	800	132	360	471	594	121	331	433	546	
56	58.82	31	80975	259	0.0548	177	458	634	800	132	340	471	594	121	312	433	546	
63	67.41	27	83556	234	0.0296	177	434	634	800	132	322	471	594	121	296	433	546	
71	75.78	24	81926	204	0.0280	177	414	634	800	132	308	471	594	121	283	433	546	
80	83.85	21	79000	178	0.0264	177	407	634	800	132	303	471	594	121	278	433	546	
90	94.11	19	80975	162	0.0254	177	387	634	800	132	287	471	594	121	264	433	546	
100	104.19	17	81926	148	0.0170	177	372	634	800	132	276	471	594	121	254	433	546	
112	115.29	16	79000	129	0.0161	177	365	634	800	132	271	471	594	121	249	433	546	
125	129.41	14	80975	118	0.0156	177	346	634	800	132	257	471	594	121	237	433	546	
100	96.02	19	81926	161	0.0331	132	352	475	544	98	261	353	404	90	240	324	372	
112	107.95	17	80311	140	0.0323	132	336	475	519	98	249	353	386	90	229	324	355	
125	119.45	15	78342	124	0.0315	132	329	475	509	98	245	353	378	90	225	324	348	
140	137.39	13	81926	112	0.0204	132	326	475	504	98	242	353	375	90	223	324	344	
160	154.45	12	80311	98	0.0200	132	312	475	482	98	232	353	358	90	213	324	329	
180	170.90	11	78342	86	0.0196	132	306	475	474	98	228	353	352	90	209	324	324	
200	191.82	9	80317	79	0.0194	132	292	475	453	98	217	353	335	90	199	324	308	
224	214.52	8	80311	71	0.0125	132	287	475	452	98	213	353	329	90	196	324	303	E4H (x4)
250	237.36	8	78342	62	0.0123	132	282	475	450	98	209	353	324	90	193	324	298	
280	266.42	7	80317	57	0.0122	132	269	475	450	98	200	353	309	90	184	324	284	
315	305.31	6	80311	50	0.0070	132	268	475	450	98	199	353	308	90	183	324	284	
355	343.23	5	78713	43	0.0069	132	265	475	450	98	197	353	304	90	181	324	280	
400	379.78	5	78108	39	0.0068	132	263	475	450	98	194	353	301	90	179	324	276	
450	426.28	4	77683	34	0.0068	132	261	475	450	98	191	353	296	90	176	324	272	
500	480.52	4	78713	31	0.0040	132	259	475	450	98	189	353	293	90	174	324	269	
560	531.69	3	78342	28	0.0039	132	258	475	450	98	186	353	287	90	171	324	264	
630	596.79	3	77683	25	0.0039	132	258	475	450	98	181	353	280	90	166	324	257	

E2H / E3H / E4H ...42 — SPLIT HOUSING — 50 Hz — 111 kNm

	i_N	i_{eff}	n_2 [rpm]	T_{2N} [Nm]	P_N [kW]	J [Kgm²]	R1 P_{t0} [kW]	R1	R1 H_2O	R1 +H_2O	S5 P_{t0} [kW]	S5	S5 H_2O	S5 +H_2O	T6 P_{t0} [kW]	T6	T6 H_2O	T6 +H_2O	Type
n_1 = 1000 rpm	4	3.92	255	99944	2672	2.1663	483	967	1023	1507	359	719	760	1120	330	661	699	1029	E2H (x2)
	4.5	4.39	228	99944	2386	1.8296	469	938	992	1462	348	697	737	1086	320	641	678	999	
	5	4.92	203	104977	2232	1.5435	453	908	960	1414	337	674	713	1051	310	620	656	966	
	5.6	5.54	180	109292	2064	1.2982	436	872	922	1359	324	648	685	1010	298	596	630	928	
	6.3	6.27	160	111055	1856	1.1793	404	808	855	1259	300	600	635	935	276	552	584	860	
	7.1	7.12	140	111055	1633	0.9775	395	791	836	1232	294	588	621	915	270	540	571	842	
	8	7.76	129	111055	1499	0.9066	372	744	787	1159	276	553	585	861	254	508	537	792	
	9	8.74	114	111055	1330	0.7040	360	720	761	1122	267	535	566	833	246	492	520	766	
	10	9.95	100	108930	1146	0.6127	342	684	723	1065	254	508	537	791	233	467	494	728	
	11.2	10.97	91	108930	1040	0.5344	320	641	678	998	238	476	503	742	219	438	463	682	
	12.5	12.76	78	108930	894	0.4066	300	595	629	926	223	442	467	688	205	406	429	633	
	14	14.22	70	108930	802	0.3573	300	558	590	870	223	415	439	646	205	381	403	594	
	16	15.49	65	108573	734	0.3315	300	547	578	852	223	406	430	633	205	374	395	582	
	18	17.63	57	106825	635	0.2643	300	433	568	662	223	322	422	492	205	296	388	452	
	16	16.05	62	108930	711	0.4217	246	493	541	769	183	366	402	571	168	337	370	525	E3H (x3)
	18	17.89	56	106825	625	0.3899	232	465	541	725	173	346	402	539	159	318	370	495	
	20	19.49	51	106825	574	0.3742	228	456	541	710	169	339	402	528	156	311	370	485	
	22.4	22.96	44	106825	487	0.2348	224	448	541	697	166	333	402	518	153	306	370	476	
	25	25.60	39	106825	437	0.2193	212	424	541	661	157	315	402	491	145	290	370	451	
	28	27.89	36	106825	401	0.2116	208	417	541	649	155	310	402	482	142	285	370	443	
	31.5	31.73	32	104740	346	0.1910	201	400	541	630	149	297	402	468	137	273	370	430	
	35.5	35.55	28	104740	308	0.1378	200	385	541	630	149	286	402	468	137	263	370	430	
	40	38.73	26	104740	283	0.1338	200	379	541	630	149	282	402	468	137	259	370	430	
	45	44.06	23	102677	244	0.1232	200	365	541	630	149	271	402	468	137	249	370	430	
	50	51.03	20	104740	215	0.0748	200	344	541	630	149	255	402	468	137	235	370	430	
	56	56.88	18	104740	193	0.0717	200	327	541	630	149	243	402	468	137	224	370	430	
	63	61.97	16	104740	177	0.0701	200	323	541	630	149	240	402	468	137	220	370	430	
	71	70.50	14	102677	153	0.0660	200	311	541	630	149	231	402	468	137	212	370	430	
	80	80.95	12	104740	135	0.0421	200	289	541	630	149	215	402	468	137	197	370	430	
	90	88.19	11	102677	122	0.0413	200	289	541	630	149	215	402	468	137	197	370	430	
	100	100.33	10	100633	105	0.0393	200	289	541	630	149	215	402	468	137	197	370	430	
	71	71.60	14	104740	153	0.0573	150	282	406	439	111	209	302	326	102	192	277	300	E4H (x4)
	80	79.82	13	104740	137	0.0557	150	270	406	421	111	201	302	312	102	184	277	287	
	90	86.96	11	102677	124	0.0549	150	266	406	415	111	198	302	308	102	182	277	283	
	100	102.45	10	102677	105	0.0322	150	263	406	409	111	195	302	304	102	179	277	279	
	112	114.20	9	102677	94	0.0314	150	252	406	392	111	187	302	292	102	172	277	268	
	125	124.42	8	102677	86	0.0310	150	249	406	388	111	185	302	288	102	170	277	265	
	140	141.54	7	100633	74	0.0300	150	241	406	375	111	179	302	278	102	164	277	256	
	160	158.61	6	102677	68	0.0185	150	234	406	364	111	174	302	271	102	160	277	249	
	180	172.80	6	102677	62	0.0183	150	231	406	360	111	172	302	267	102	158	277	246	
	200	196.59	5	100633	54	0.0177	150	224	406	348	111	166	302	259	102	153	277	238	
	224	227.67	4	102677	47	0.0093	150	219	406	338	111	160	302	249	102	147	277	229	
	250	253.78	4	102677	42	0.0092	150	217	406	331	111	154	302	239	102	141	277	220	
	280	276.48	4	102677	39	0.0091	150	217	406	331	111	152	302	237	102	140	277	217	
	315	314.54	3	106825	36	0.0089	150	217	406	331	111	147	302	229	102	135	277	211	
	355	355.29	3	102677	30	0.0051	150	217	406	331	111	142	302	221	102	130	277	203	
	400	387.08	3	102677	28	0.0051	150	217	406	331	111	140	302	219	102	129	277	201	
	450	440.35	2	104740	25	0.0050	150	217	406	331	111	136	302	212	102	125	277	195	

E2H / E3H / E4H ...42 SPLIT HOUSING 50 Hz 111 kNm

n_1 = 1500 rpm

i_N	i_{eff}	n_2 [rpm]	T_{2N} [Nm]	P_N [kW]	J [Kgm²]	R1 P_{t0} [kW]	R1	R1 H_2O	R1 $+H_2O$	S5 P_{t0} [kW]	S5	S5 H_2O	S5 $+H_2O$	T6 P_{t0} [kW]	T6	T6 H_2O	T6 $+H_2O$	Type
4	3.92	383	99944	4008	2.1663	454	1297	960	1804	337	964	713	1340	310	886	656	1232	E2H (x2)
4.5	4.39	342	99944	3579	1.8296	444	1269	939	1765	330	943	698	1311	303	867	642	1205	
5	4.92	305	104977	3349	1.5435	433	1239	917	1722	322	920	681	1280	296	846	626	1176	
5.6	5.54	271	109292	3097	1.2982	419	1199	888	1668	312	891	660	1239	286	819	606	1139	
6.3	6.27	239	111055	2783	1.1793	391	1118	827	1554	290	830	615	1155	267	763	565	1062	
7.1	7.12	211	111055	2449	0.9775	385	1101	815	1530	286	818	605	1137	263	752	556	1045	
8	7.76	193	111055	2248	0.9066	363	1039	769	1444	270	772	571	1073	248	709	525	987	
9	8.74	172	111055	1996	0.7040	353	1010	748	1405	262	751	556	1044	241	690	511	959	
10	9.95	151	108930	1719	0.6127	337	964	713	1340	250	716	530	996	230	658	487	915	
11.2	10.97	137	108930	1560	0.5344	316	905	670	1258	235	672	498	935	216	618	457	859	
12.5	12.76	118	108930	1341	0.4066	300	842	623	1171	223	625	463	870	205	575	426	799	
14	14.22	105	108930	1203	0.3573	300	790	585	1099	223	587	435	817	205	540	400	751	
16	15.49	97	108573	1101	0.3315	300	775	574	1078	223	576	426	801	205	529	392	736	
18	17.63	85	106825	952	0.2643	300	583	568	767	223	433	422	570	205	398	388	524	
16	16.05	93	108930	1066	0.4217	239	683	541	949	177	507	402	705	163	466	370	648	E3H (x3)
18	17.89	84	106825	938	0.3899	225	643	541	894	167	478	402	664	154	439	370	611	
20	19.49	77	106825	861	0.3742	220	629	541	875	163	467	402	650	150	430	370	597	
22.4	22.96	65	106825	731	0.2348	217	622	541	865	162	462	402	642	148	425	370	590	
25	25.60	59	106825	656	0.2193	205	588	541	817	153	437	402	607	140	401	370	558	
28	27.89	54	106825	602	0.2116	201	576	541	801	150	428	402	595	138	393	370	547	
31.5	31.73	47	104740	519	0.1910	200	551	541	766	149	409	402	569	137	376	370	523	
35.5	35.55	42	104740	463	0.1378	200	534	541	743	149	397	402	552	137	365	370	507	
40	38.73	39	104740	425	0.1338	200	524	541	732	149	390	402	544	137	358	370	500	
45	44.06	34	102677	366	0.1232	200	503	541	730	149	374	402	542	137	344	370	499	
50	51.03	29	104740	322	0.0748	200	477	541	730	149	354	402	542	137	325	370	499	
56	56.88	26	104740	289	0.0717	200	454	541	730	149	337	402	542	137	310	370	499	
63	61.97	24	104740	265	0.0701	200	447	541	730	149	332	402	542	137	305	370	499	
71	70.50	21	102677	229	0.0660	200	430	541	730	149	319	402	542	137	293	370	499	
80	80.95	19	104740	203	0.0421	200	393	541	730	149	292	402	542	137	269	370	499	
90	88.19	17	102677	183	0.0413	200	389	541	730	149	289	402	542	137	266	370	499	
100	100.33	15	100633	158	0.0393	200	389	541	730	149	289	402	542	137	266	370	499	
71	71.60	21	104740	230	0.0573	150	387	406	538	111	288	302	400	102	264	277	368	E4H (x4)
80	79.82	19	104740	206	0.0557	150	370	406	515	111	275	302	383	102	253	277	352	
90	86.96	17	102677	185	0.0549	150	364	406	507	111	271	302	377	102	249	277	346	
100	102.45	15	102677	157	0.0322	150	364	406	506	111	270	302	376	102	249	277	346	
112	114.20	13	102677	141	0.0314	150	349	406	485	111	259	302	360	102	238	277	331	
125	124.42	12	102677	130	0.0310	150	344	406	479	111	256	302	356	102	235	277	327	
140	141.54	11	100633	112	0.0300	150	333	406	463	111	247	302	344	102	227	277	316	
160	158.61	9	102677	102	0.0185	150	326	406	453	111	242	302	337	102	223	277	309	
180	172.80	9	102677	93	0.0183	150	322	406	447	111	239	302	332	102	220	277	306	
200	196.59	8	100633	80	0.0177	150	311	406	433	111	231	302	322	102	213	277	296	
224	227.67	7	102677	71	0.0093	150	300	406	417	111	223	302	309	102	205	277	284	
250	253.78	6	102677	64	0.0092	150	294	406	400	111	214	302	297	102	197	277	273	
280	276.48	5	102677	58	0.0091	150	292	406	396	111	211	302	294	102	194	277	270	
315	314.54	5	106825	53	0.0089	150	292	406	389	111	205	302	285	102	188	277	262	
355	355.29	4	102677	45	0.0051	150	292	406	384	111	196	302	273	102	180	277	251	
400	387.08	4	102677	42	0.0051	150	292	406	384	111	194	302	270	102	178	277	248	
450	440.35	3	104740	37	0.0050	150	292	406	384	111	188	302	261	102	172	277	240	

E2H / E3H / E4H ...42 — SPLIT HOUSING — 60 Hz — 111 kNm

	i_N	i_{eff}	n_2 [rpm]	T_{2N} [Nm]	P_N [kW]	J [Kgm²]	R1 P_{t0} [kW]	R1	R1 H_2O	R1 +H_2O	S5 P_{t0} [kW]	S5	S5 H_2O	S5 +H_2O	T6 P_{t0} [kW]	T6	T6 H_2O	T6 +H_2O	Type
n_1 = 1200 rpm	**4**	3.92	306	99944	3206	2.1663	471	1104	997	1630	350	820	740	1211	322	754	681	1113	E2H (x2)
	4.5	4.39	274	99944	2863	1.8296	458	1075	970	1587	341	799	721	1179	313	734	663	1084	
	5	4.92	244	104977	2679	1.5435	445	1043	942	1540	331	775	700	1145	304	713	643	1052	
	5.6	5.54	216	109292	2477	1.2982	429	1006	908	1485	319	747	675	1103	293	687	620	1014	
	6.3	6.27	191	111055	2227	1.1793	398	934	843	1379	296	694	626	1024	272	638	576	942	
	7.1	7.12	169	111055	1960	0.9775	391	917	828	1353	290	681	615	1006	267	626	565	924	
	8	7.76	155	111055	1799	0.9066	368	864	780	1275	274	642	579	947	252	590	533	871	
	9	8.74	137	111055	1597	0.7040	357	838	756	1237	265	622	562	919	244	572	516	845	
	10	9.95	121	108930	1375	0.6127	340	797	719	1177	253	592	535	874	232	544	491	804	
	11.2	10.97	109	108930	1248	0.5344	319	747	675	1103	237	555	501	820	218	510	461	753	
	12.5	12.76	94	108930	1073	0.4066	300	694	626	1024	223	516	465	761	205	474	428	700	
	14	14.22	84	108930	963	0.3573	300	651	588	961	223	484	437	714	205	445	402	657	
	16	15.49	77	108573	881	0.3315	300	638	576	942	223	474	428	700	205	436	393	643	
	18	17.63	68	106825	762	0.2643	300	433	568	662	223	322	422	492	205	296	388	452	
	16	16.05	75	108930	853	0.4217	243	570	541	841	180	423	402	625	166	389	370	574	E3H (x3)
	18	17.89	67	106825	750	0.3899	229	537	541	793	170	399	402	589	156	367	370	541	
	20	19.49	62	106825	689	0.3742	224	526	541	776	166	390	402	576	153	359	370	530	
	22.4	22.96	52	106825	585	0.2348	221	517	541	764	164	384	402	568	151	353	370	522	
	25	25.60	47	106825	524	0.2193	209	490	541	723	155	364	402	537	143	334	370	494	
	28	27.89	43	106825	481	0.2116	205	481	541	709	152	357	402	527	140	328	370	485	
	31.5	31.73	38	104740	415	0.1910	200	461	541	680	149	342	402	505	137	315	370	465	
	35.5	35.55	34	104740	370	0.1378	200	445	541	657	149	331	402	488	137	304	370	449	
	40	38.73	31	104740	340	0.1338	200	438	541	646	149	325	402	480	137	299	370	441	
	45	44.06	27	102677	293	0.1232	200	421	541	630	149	313	402	468	137	287	370	430	
	50	51.03	24	104740	258	0.0748	200	397	541	630	149	295	402	468	137	271	370	430	
	56	56.88	21	104740	231	0.0717	200	378	541	630	149	281	402	468	137	258	370	430	
	63	61.97	19	104740	212	0.0701	200	372	541	630	149	277	402	468	137	254	370	430	
	71	70.50	17	102677	183	0.0660	200	358	541	630	149	266	402	468	137	245	370	430	
	80	80.95	15	104740	163	0.0421	200	329	541	630	149	244	402	468	137	225	370	430	
	90	88.19	14	102677	146	0.0413	200	323	541	630	149	240	402	468	137	221	370	430	
	100	100.33	12	100633	126	0.0393	200	311	541	630	149	231	402	468	137	213	370	430	
	71	71.60	17	104740	184	0.0573	150	324	406	479	111	241	302	356	102	222	277	327	E4H (x4)
	80	79.82	15	104740	165	0.0557	150	311	406	459	111	231	302	341	102	212	277	313	
	90	86.96	14	102677	148	0.0549	150	306	406	452	111	227	302	336	102	209	277	309	
	100	102.45	12	102677	126	0.0322	150	304	406	448	111	226	302	333	102	207	277	306	
	112	114.20	11	102677	113	0.0314	150	291	406	430	111	216	302	319	102	199	277	294	
	125	124.42	10	102677	104	0.0310	150	287	406	424	111	214	302	315	102	196	277	290	
	140	141.54	8	100633	89	0.0300	150	278	406	410	111	206	302	305	102	190	277	280	
	160	158.61	8	102677	81	0.0185	150	271	406	400	111	201	302	297	102	185	277	273	
	180	172.80	7	102677	75	0.0183	150	268	406	395	111	199	302	294	102	183	277	270	
	200	196.59	6	100633	64	0.0177	150	259	406	382	111	192	302	284	102	177	277	261	
	224	227.67	5	102677	57	0.0093	150	249	406	367	111	185	302	273	102	170	277	251	
	250	253.78	5	102677	51	0.0092	150	239	406	353	111	178	302	262	102	163	277	241	
	280	276.48	4	102677	47	0.0091	150	236	406	349	111	176	302	259	102	161	277	238	
	315	314.54	4	106825	43	0.0089	150	229	406	340	111	170	302	252	102	157	277	231	
	355	355.29	3	102677	36	0.0051	150	222	406	334	111	164	302	241	102	150	277	222	
	400	387.08	3	102677	33	0.0051	150	221	406	332	111	162	302	239	102	149	277	219	
	450	440.35	3	104740	30	0.0050	150	217	406	331	111	157	302	231	102	144	277	213	

E2H / E3H / E4H ...42 — SPLIT HOUSING — 60 Hz — 111 kNm

n_1 = 1800 rpm

i_N	i_{eff}	n_2 [rpm]	T_{2N} [Nm]	P_N [kW]	J [Kgm²]	R1 P_{t0} [kW]	R1	R1 H_2O	R1 +H_2O	S5 P_{t0} [kW]	S5	S5 H_2O	S5 +H_2O	T6 P_{t0} [kW]	T6	T6 H_2O	T6 +H_2O	Type
4	3.92	460	99944	4810	2.1663	437	1325	925	1813	325	985	688	1347	299	905	632	1239	E2H (x2)
4.5	4.39	410	99944	4294	1.8296	430	1302	910	1782	319	968	676	1324	293	890	621	1217	
5	4.92	366	104977	4018	1.5435	421	1278	892	1749	313	949	663	1299	288	873	609	1194	
5.6	5.54	325	109292	3716	1.2982	410	1243	868	1701	305	923	645	1264	280	849	593	1162	
6.3	6.27	287	111055	3340	1.1793	383	1162	812	1591	285	864	603	1182	262	794	554	1086	
7.1	7.12	253	111055	2939	0.9775	379	1148	802	1571	281	853	596	1167	259	784	547	1073	
8	7.76	232	111055	2698	0.9066	358	1085	758	1485	266	806	563	1103	244	741	518	1014	
9	8.74	206	111055	2395	0.7040	349	1058	739	1447	259	786	549	1075	238	722	504	988	
10	9.95	181	108930	2063	0.6127	333	1011	706	1383	248	751	524	1028	228	690	482	945	
11.2	10.97	164	108930	1872	0.5344	313	950	664	1300	233	706	493	966	214	649	453	888	
12.5	12.76	141	108930	1609	0.4066	300	886	619	1212	223	658	460	901	205	605	423	828	
14	14.22	127	108930	1444	0.3573	300	833	582	1140	223	619	432	847	205	569	397	778	
16	15.49	116	108573	1321	0.3315	300	817	571	1118	223	607	425	831	205	558	390	764	
18	17.63	102	106825	1142	0.2643	300	583	568	767	223	433	422	570	205	398	388	524	
16	16.05	112	108930	1279	0.4217	235	712	541	974	174	529	402	723	160	486	370	665	E3H (x3)
18	17.89	101	106825	1125	0.3899	221	670	541	917	164	498	402	681	151	458	370	626	
20	19.49	92	106825	1033	0.3742	216	655	541	897	161	487	402	666	148	448	370	612	
22.4	22.96	78	106825	877	0.2348	215	651	541	891	160	484	402	662	147	445	370	609	
25	25.60	70	106825	787	0.2193	203	615	541	841	151	457	402	625	139	420	370	575	
28	27.89	65	106825	722	0.2116	200	602	541	824	149	448	402	612	137	411	370	563	
31.5	31.73	57	104740	622	0.1910	200	575	541	787	149	427	402	585	137	393	370	538	
35.5	35.55	51	104740	555	0.1378	200	559	541	765	149	415	402	568	137	382	370	522	
40	38.73	46	104740	510	0.1338	200	548	541	750	149	407	402	557	137	374	370	512	
45	44.06	41	102677	439	0.1232	200	525	541	730	149	390	402	542	137	359	370	499	
50	51.03	35	104740	387	0.0748	200	499	541	730	149	371	402	542	137	341	370	499	
56	56.88	32	104740	347	0.0717	200	475	541	730	149	353	402	542	137	324	370	499	
63	61.97	29	104740	319	0.0701	200	467	541	730	149	347	402	542	137	319	370	499	
71	70.50	26	102677	275	0.0660	200	449	541	730	149	333	402	542	137	307	370	499	
80	80.95	22	104740	244	0.0421	200	411	541	730	149	305	402	542	137	281	370	499	
90	88.19	20	102677	219	0.0413	200	404	541	730	149	300	402	542	137	276	370	499	
100	100.33	18	100633	189	0.0393	200	389	541	730	149	289	402	542	137	266	370	499	
71	71.60	25	104740	276	0.0573	150	403	406	551	111	299	302	409	102	275	277	376	E4H (x4)
80	79.82	23	104740	247	0.0557	150	385	406	527	111	286	302	391	102	263	277	360	
90	86.96	21	102677	223	0.0549	150	378	406	518	111	281	302	385	102	258	277	354	
100	102.45	18	102677	189	0.0322	150	380	406	520	111	282	302	386	102	259	277	355	
112	114.20	16	102677	169	0.0314	150	364	406	498	111	270	302	370	102	249	277	340	
125	124.42	14	102677	156	0.0310	150	359	406	491	111	267	302	365	102	245	277	336	
140	141.54	13	100633	134	0.0300	150	347	406	474	111	258	302	353	102	237	277	324	
160	158.61	11	102677	122	0.0185	150	341	406	467	111	253	302	347	102	233	277	319	
180	172.80	10	102677	112	0.0183	150	337	406	461	111	250	302	342	102	230	277	315	
200	196.59	9	100633	96	0.0177	150	325	406	445	111	242	302	331	102	222	277	304	
224	227.67	8	102677	85	0.0093	150	314	406	430	111	234	302	320	102	215	277	294	
250	253.78	7	102677	76	0.0092	150	302	406	413	111	224	302	307	102	206	277	282	
280	276.48	7	102677	70	0.0091	150	299	406	408	111	222	302	303	102	204	277	279	
315	314.54	6	106825	64	0.0089	150	295	406	395	111	215	302	294	102	197	277	270	
355	355.29	5	102677	54	0.0051	150	292	406	388	111	205	302	281	102	189	277	258	
400	387.08	5	102677	50	0.0051	150	292	406	385	111	203	302	278	102	186	277	255	
450	440.35	4	104740	45	0.0050	150	292	406	384	111	196	302	268	102	180	277	247	

E2H / E3H / E4H ...43 — SPLIT HOUSING — 50 Hz — 119 kNm

	i_N	i_{eff}	n_2 [rpm]	T_{2N} [Nm]	P_N [kW]	J [Kgm²]	R1 P_{t0} [kW]	R1	R1 H_2O	R1 +H_2O	S5 P_{t0} [kW]	S5	S5 H_2O	S5 +H_2O	T6 P_{t0} [kW]	T6	T6 H_2O	T6 +H_2O	Type
n_1 = 1000 rpm	**4.5**	4.42	226	105264	2496	2.4047	546	1098	1089	1641	406	816	809	1219	373	750	744	1121	E2H (x2)
	5	4.95	202	104451	2211	2.0196	530	1066	1057	1593	394	792	785	1183	362	728	722	1088	
	5.6	5.55	180	109235	2060	1.6943	513	1032	1024	1543	381	767	760	1146	351	705	699	1054	
	6.3	6.25	160	106045	1776	1.4172	493	991	983	1481	366	737	730	1100	337	677	671	1012	
	7.1	7.07	142	112424	1666	1.2725	458	921	913	1377	340	685	679	1023	313	629	624	940	
	8	8.03	125	114816	1497	1.1266	449	903	895	1349	334	671	665	1003	307	617	611	922	
	9	8.75	114	117208	1403	0.9390	423	851	843	1271	314	632	627	944	289	581	576	868	
	10	9.86	101	117208	1245	0.8182	410	824	817	1231	304	612	607	914	280	563	558	841	
	11.2	11.22	89	117208	1094	0.6740	389	783	776	1170	289	582	577	869	266	535	530	799	
	12.5	12.37	81	117208	992	0.5690	365	734	727	1096	271	545	541	815	249	501	497	749	
	14	14.39	70	117208	853	0.4605	339	681	675	1018	252	506	502	756	231	465	461	695	
	16	16.04	62	118005	771	0.4181	318	640	634	956	236	475	471	710	217	437	433	653	
	18	17.47	57	112424	674	0.3320	312	627	621	936	232	466	462	696	213	428	424	639	
	20	19.88	50	118005	622	0.2719	300	433	568	662	223	322	422	492	205	296	388	452	
	18	18.10	55	118005	683	0.4359	281	565	560	844	209	420	416	627	192	386	383	577	E3H (x3)
	20	20.17	50	118005	612	0.4009	265	533	541	797	197	396	402	592	181	364	370	544	
	22.4	21.98	45	113221	539	0.3830	259	521	541	779	193	387	402	579	177	356	370	532	
	25	25.89	39	118005	477	0.2409	255	513	541	767	190	381	402	570	174	351	370	524	
	28	28.86	35	118005	428	0.2238	242	486	541	727	180	361	402	540	165	332	370	496	
	31.5	31.45	32	113221	377	0.2151	237	477	541	713	176	354	402	530	162	326	370	487	
	35.5	35.78	28	118005	345	0.1933	228	459	541	686	170	341	402	510	156	314	370	468	
	40	40.09	25	118005	308	0.1395	220	442	541	660	163	328	402	491	150	302	370	451	
	45	43.68	23	113221	271	0.1350	216	434	541	649	160	323	402	482	147	297	370	443	
	50	49.69	20	118005	249	0.1237	208	419	541	630	155	311	402	468	142	286	370	430	
	56	57.54	17	118803	216	0.0753	200	394	541	630	149	293	402	468	137	269	370	430	
	63	64.14	16	118803	194	0.0718	200	375	541	630	149	279	402	468	137	256	370	430	
	71	69.88	14	114019	171	0.0700	200	369	541	630	149	274	402	468	137	252	370	430	
	80	79.50	13	118803	156	0.0656	200	356	541	630	149	265	402	468	137	243	370	430	
	90	91.28	11	118803	136	0.0419	200	327	541	630	149	243	402	468	137	223	370	430	
	100	99.45	10	114019	120	0.0410	200	321	541	630	149	239	402	468	137	220	370	430	
	112	113.13	9	118803	110	0.0388	200	310	541	630	149	231	402	468	137	212	370	430	
	80	80.75	12	118803	154	0.0580	160	323	406	482	119	240	302	358	110	220	277	329	E4H (x4)
	90	90.01	11	118803	138	0.0562	154	309	406	462	114	230	302	343	105	211	277	315	
	100	98.06	10	114019	122	0.0554	152	304	406	454	113	226	302	338	104	208	277	310	
	112	115.53	9	118803	108	0.0325	151	300	406	448	113	223	302	333	103	205	277	306	
	125	128.78	8	118803	97	0.0317	150	287	406	429	111	213	302	319	102	196	277	293	
	140	140.30	7	114019	85	0.0312	150	283	406	423	111	210	302	314	102	193	277	289	
	160	159.61	6	118803	78	0.0302	150	275	406	411	111	204	302	305	102	188	277	280	
	180	178.86	6	118803	70	0.0186	150	265	406	396	111	197	302	294	102	181	277	270	
	200	194.86	5	114019	61	0.0184	150	262	406	391	111	195	302	291	102	179	277	267	
	224	221.68	5	118803	56	0.0178	150	254	406	380	111	189	302	282	102	174	277	260	
	250	256.73	4	118803	48	0.0094	150	242	406	362	111	180	302	269	102	166	277	247	
	280	286.18	3	118803	43	0.0092	150	233	406	349	111	173	302	259	102	159	277	238	
	315	311.78	3	114019	38	0.0091	150	231	406	345	111	172	302	256	102	158	277	236	
	355	354.69	3	118803	35	0.0089	150	224	406	339	111	167	302	249	102	153	277	229	
	400	400.65	2	118803	31	0.0052	150	220	406	333	111	160	302	239	102	147	277	219	
	450	436.49	2	114019	27	0.0051	150	219	406	331	111	158	302	236	102	145	277	217	
	500	496.57	2	118803	25	0.0050	150	217	406	331	111	154	302	229	102	141	277	211	

E2H / E3H / E4H ...43 SPLIT HOUSING 50 Hz 119 kNm

n_1 = 1500 rpm

i_N	i_{eff}	n_2 [rpm]	T_{2N} [Nm]	P_N [kW]	J [Kgm²]	R1 P_{t0} [kW]	R1	R1 H_2O	R1 $+H_2O$	S5 P_{t0} [kW]	S5	S5 H_2O	S5 $+H_2O$	T6 P_{t0} [kW]	T6	T6 H_2O	T6 $+H_2O$	Type
4.5	4.42	340	105264	3743	2.4047	512	1471	1021	1980	380	1093	758	1471	350	1005	697	1352	E2H (x2)
5	4.95	303	104451	3317	2.0196	501	1439	998	1936	372	1069	742	1439	342	983	682	1322	
5.6	5.55	270	109235	3090	1.6943	489	1405	975	1891	363	1044	724	1405	334	960	666	1292	
6.3	6.25	240	106045	2664	1.4172	472	1356	941	1825	351	1007	699	1356	322	926	643	1246	
7.1	7.07	212	112424	2499	1.2725	442	1269	880	1708	328	943	654	1269	302	867	601	1166	
8	8.03	187	114816	2246	1.1266	435	1251	868	1684	324	929	645	1251	297	854	593	1150	
9	8.75	171	117208	2104	0.9390	412	1183	821	1591	306	879	610	1182	281	808	560	1087	
10	9.86	152	117208	1868	0.8182	400	1151	798	1549	298	855	593	1151	274	786	545	1058	
11.2	11.22	134	117208	1640	0.6740	382	1099	763	1479	284	816	567	1099	261	751	521	1010	
12.5	12.37	121	117208	1489	0.5690	359	1032	716	1389	267	767	532	1032	245	705	489	949	
14	14.39	104	117208	1280	0.4605	335	961	667	1293	249	714	496	961	228	656	455	883	
16	16.04	94	118005	1156	0.4181	314	903	627	1215	234	671	466	903	215	617	428	830	
18	17.47	86	112424	1011	0.3320	308	885	614	1191	229	657	456	885	210	604	419	813	
20	19.88	75	118005	933	0.2719	300	583	568	775	223	433	422	576	205	398	388	529	
18	18.10	83	118005	1024	0.4359	271	780	543	1049	202	579	403	779	185	532	371	717	E3H (x3)
20	20.17	74	118005	919	0.4009	256	735	541	989	190	546	402	735	175	502	370	676	
22.4	21.98	68	113221	809	0.3830	250	717	541	965	185	533	402	717	170	490	370	659	
25	25.89	58	118005	716	0.2409	248	711	541	958	184	529	402	711	169	486	370	654	
28	28.86	52	118005	642	0.2238	234	673	541	905	174	500	402	673	160	459	370	618	
31.5	31.45	48	113221	566	0.2151	229	658	541	885	170	489	402	658	156	449	370	605	
35.5	35.78	42	118005	518	0.1933	220	631	541	850	163	469	402	631	150	431	370	580	
40	40.09	37	118005	462	0.1395	213	612	541	824	158	455	402	612	145	418	370	562	
45	43.68	34	113221	407	0.1350	209	600	541	807	155	446	402	600	143	410	370	551	
50	49.69	30	118005	373	0.1237	201	578	541	778	149	429	402	578	137	395	370	531	
56	57.54	26	118803	324	0.0753	200	546	541	736	149	406	402	547	137	373	370	503	
63	64.14	23	118803	291	0.0718	200	519	541	730	149	386	402	542	137	355	370	499	
71	69.88	21	114019	256	0.0700	200	510	541	730	149	379	402	542	137	348	370	499	
80	79.50	19	118803	235	0.0656	200	493	541	730	149	366	402	542	137	337	370	499	
90	91.28	16	118803	204	0.0419	200	450	541	730	149	334	402	542	137	307	370	499	
100	99.45	15	114019	180	0.0410	200	442	541	730	149	328	402	542	137	302	370	499	
112	113.13	13	118803	165	0.0388	200	427	541	730	149	317	402	542	137	292	370	499	
80	80.75	19	118803	231	0.0580	155	445	406	599	115	331	302	445	106	304	277	409	E4H (x4)
90	90.01	17	118803	207	0.0562	151	426	406	574	112	317	302	426	103	291	277	392	
100	98.06	15	114019	183	0.0554	150	419	406	564	111	311	302	419	102	286	277	385	
112	115.53	13	118803	162	0.0325	150	417	406	561	111	310	302	417	102	285	277	383	
125	128.78	12	118803	145	0.0317	150	400	406	538	111	297	302	400	102	273	277	367	
140	140.30	11	114019	128	0.0312	150	394	406	530	111	293	302	394	102	269	277	362	
160	159.61	9	118803	117	0.0302	150	382	406	514	111	284	302	382	102	261	277	351	
180	178.86	8	118803	104	0.0186	150	371	406	500	111	276	302	371	102	254	277	341	
200	194.86	8	114019	92	0.0184	150	367	406	493	111	272	302	367	102	250	277	337	
224	221.68	7	118803	84	0.0178	150	356	406	479	111	265	302	356	102	243	277	327	
250	256.73	6	118803	73	0.0094	150	340	406	457	111	252	302	340	102	232	277	312	
280	286.18	5	118803	65	0.0092	150	327	406	440	111	243	302	327	102	223	277	300	
315	311.78	5	114019	57	0.0091	150	323	406	434	111	240	302	323	102	220	277	297	
355	354.69	4	118803	53	0.0089	150	314	406	422	111	233	302	314	102	214	277	288	
400	400.65	4	118803	47	0.0052	150	301	406	402	111	222	302	299	102	204	277	275	
450	436.49	3	114019	41	0.0051	150	299	406	398	111	219	302	295	102	202	277	271	
500	496.57	3	118803	38	0.0050	150	295	406	392	111	213	302	287	102	196	277	263	

E2H / E3H / E4H ...43 — SPLIT HOUSING — 60 Hz — 119 kNm

n_1 = 1200 rpm

i_N	i_{eff}	n_2 [rpm]	T_{2N} [Nm]	P_N [kW]	J [Kgm²]	R1 P_{t0} [kW]	R1	R1 H_2O	R1 +H_2O	S5 P_{t0} [kW]	S5	S5 H_2O	S5 +H_2O	T6 P_{t0} [kW]	T6	T6 H_2O	T6 +H_2O	Type
4.5	4.42	272	105264	2995	2.4047	532	1253	1060	1781	395	931	788	1323	363	856	724	1216	E2H (x2)
5	4.95	243	104451	2653	2.0196	518	1220	1032	1734	385	906	767	1288	354	833	705	1184	
5.6	5.55	216	109235	2472	1.6943	503	1185	1003	1685	374	880	745	1252	344	809	685	1151	
6.3	6.25	192	106045	2132	1.4172	484	1140	965	1621	360	847	717	1204	331	779	659	1107	
7.1	7.07	170	112424	1999	1.2725	451	1063	899	1511	335	790	668	1123	308	726	614	1032	
8	8.03	149	114816	1797	1.1266	443	1044	884	1485	329	776	657	1103	303	713	604	1014	
9	8.75	137	117208	1683	0.9390	418	986	834	1401	311	732	620	1041	286	673	570	957	
10	9.86	122	117208	1494	0.8182	406	956	809	1360	302	711	601	1010	277	653	553	929	
11.2	11.22	107	117208	1312	0.6740	387	911	771	1295	287	677	573	962	264	622	527	885	
12.5	12.37	97	117208	1191	0.5690	363	855	723	1215	269	635	537	903	248	584	494	830	
14	14.39	83	117208	1024	0.4605	337	794	672	1129	250	590	499	839	230	542	459	771	
16	16.04	75	118005	925	0.4181	316	745	631	1060	235	554	469	787	216	509	431	724	
18	17.47	69	112424	809	0.3320	310	730	618	1038	230	542	459	771	212	499	422	709	
20	19.88	60	118005	746	0.2719	300	475	568	675	223	353	422	502	205	324	388	461	
18	18.10	66	118005	819	0.4359	277	652	552	927	206	484	410	688	189	445	377	633	E3H (x3)
20	20.17	59	118005	735	0.4009	261	615	541	874	194	457	402	649	178	420	370	597	
22.4	21.98	55	113221	647	0.3830	255	600	541	854	189	446	402	634	174	410	370	583	
25	25.89	46	118005	573	0.2409	252	593	541	843	187	440	402	626	172	405	370	576	
28	28.86	42	118005	514	0.2238	238	561	541	798	177	417	402	593	163	383	370	545	
31.5	31.45	38	113221	452	0.2151	233	550	541	781	173	408	402	581	159	375	370	534	
35.5	35.78	34	118005	414	0.1933	224	528	541	751	167	393	402	558	153	361	370	513	
40	40.09	30	118005	370	0.1395	217	510	541	726	161	379	402	539	148	349	370	496	
45	43.68	27	113221	326	0.1350	213	501	541	712	158	372	402	529	145	342	370	486	
50	49.69	24	118005	298	0.1237	205	483	541	687	152	359	402	510	140	330	370	469	
56	57.54	21	118803	259	0.0753	200	455	541	647	149	338	402	480	137	311	370	442	
63	64.14	19	118803	233	0.0718	200	433	541	630	149	322	402	468	137	296	370	430	
71	69.88	17	114019	205	0.0700	200	425	541	630	149	316	402	468	137	291	370	430	
80	79.50	15	118803	188	0.0656	200	411	541	630	149	306	402	468	137	281	370	430	
90	91.28	13	118803	164	0.0419	200	376	541	630	149	280	402	468	137	257	370	430	
100	99.45	12	114019	144	0.0410	200	370	541	630	149	275	402	468	137	252	370	430	
112	113.13	11	118803	132	0.0388	200	357	541	630	149	265	402	468	137	244	370	430	
80	80.75	15	118803	185	0.0580	158	372	406	529	117	276	302	393	108	254	277	361	E4H (x4)
90	90.01	13	118803	166	0.0562	152	356	406	507	113	265	302	376	104	243	277	346	
100	98.06	12	114019	146	0.0554	151	350	406	498	112	260	302	370	103	239	277	340	
112	115.53	10	118803	129	0.0325	151	347	406	494	112	258	302	367	103	237	277	337	
125	128.78	9	118803	116	0.0317	150	333	406	473	111	247	302	352	102	227	277	323	
140	140.30	9	114019	102	0.0312	150	328	406	466	111	244	302	347	102	224	277	319	
160	159.61	8	118803	94	0.0302	150	318	406	453	111	237	302	336	102	217	277	309	
180	178.86	7	118803	83	0.0186	150	308	406	438	111	229	302	325	102	210	277	299	
200	194.86	6	114019	74	0.0184	150	304	406	432	111	226	302	321	102	208	277	295	
224	221.68	5	118803	67	0.0178	150	295	406	420	111	219	302	312	102	202	277	287	
250	256.73	5	118803	58	0.0094	150	281	406	400	111	209	302	297	102	192	277	273	
280	286.18	4	118803	52	0.0092	150	271	406	385	111	201	302	286	102	185	277	263	
315	311.78	4	114019	46	0.0091	150	268	406	381	111	199	302	283	102	183	277	260	
355	354.69	3	118803	42	0.0089	150	260	406	370	111	193	302	275	102	178	277	252	
400	400.65	3	118803	37	0.0052	150	248	406	353	111	185	302	262	102	170	277	241	
450	436.49	3	114019	33	0.0051	150	246	406	349	111	183	302	259	102	168	277	239	
500	496.57	2	118803	30	0.0050	150	239	406	342	111	177	302	252	102	163	277	232	

E2H / E3H / E4H ...43 — SPLIT HOUSING — 60 Hz — 119 kNm

n_1 = 1800 rpm

i_N	i_{eff}	n_2 [rpm]	T_{2N} [Nm]	P_N [kW]	J [Kgm²]	R1 P_{t0} [kW]	R1	R1 H_2O	R1 $+H_2O$	S5 P_{t0} [kW]	S5	S5 H_2O	S5 $+H_2O$	T6 P_{t0} [kW]	T6	T6 H_2O	T6 $+H_2O$	Type
4.5	4.42	408	105264	4492	2.4047	493	1501	983	1991	366	1115	730	1479	337	1025	671	1360	E2H (x2)
5	4.95	364	104451	3980	2.0196	484	1475	966	1957	360	1096	718	1454	331	1008	660	1337	
5.6	5.55	324	109235	3708	1.6943	476	1448	948	1921	353	1076	705	1427	325	989	648	1312	
6.3	6.25	288	106045	3197	1.4172	460	1402	918	1860	342	1042	682	1382	314	958	627	1270	
7.1	7.07	255	112424	2999	1.2725	433	1318	863	1748	322	979	641	1299	296	900	589	1194	
8	8.03	224	114816	2695	1.1266	428	1303	853	1728	318	968	634	1284	292	890	583	1180	
9	8.75	206	117208	2525	0.9390	405	1234	808	1636	301	917	600	1216	277	843	552	1117	
10	9.86	183	117208	2241	0.8182	395	1203	787	1595	293	894	585	1185	270	821	538	1089	
11.2	11.22	160	117208	1968	0.6740	378	1151	753	1526	281	855	560	1134	258	786	515	1042	
12.5	12.37	146	117208	1786	0.5690	355	1082	709	1436	264	804	526	1067	243	739	484	980	
14	14.39	125	117208	1536	0.4605	332	1010	661	1339	246	750	491	995	226	690	451	915	
16	16.04	112	118005	1387	0.4181	312	950	622	1260	232	706	462	936	213	649	425	860	
18	17.47	103	112424	1213	0.3320	306	931	609	1235	227	692	453	917	209	636	416	843	
20	19.88	91	118005	1119	0.2719	300	601	568	797	223	447	422	592	205	411	388	545	
18	18.10	99	118005	1229	0.4359	266	811	541	1076	198	603	402	799	182	554	370	735	E3H (x3)
20	20.17	89	118005	1102	0.4009	251	765	541	1015	187	568	402	754	172	523	370	693	
22.4	21.98	82	113221	971	0.3830	245	746	541	989	182	554	402	735	167	509	370	675	
25	25.89	70	118005	859	0.2409	244	744	541	987	182	553	402	734	167	508	370	674	
28	28.86	62	118005	771	0.2238	231	703	541	933	172	523	402	693	158	480	370	637	
31.5	31.45	57	113221	679	0.2151	226	687	541	911	168	510	402	677	154	469	370	622	
35.5	35.78	50	118005	622	0.1933	216	659	541	874	161	489	402	649	148	450	370	597	
40	40.09	45	118005	555	0.1395	210	640	541	849	156	475	402	631	144	437	370	580	
45	43.68	41	113221	489	0.1350	206	626	541	831	153	465	402	617	140	428	370	567	
50	49.69	36	118005	448	0.1237	200	603	541	800	149	448	402	594	137	412	370	546	
56	57.54	31	118803	389	0.0753	200	572	541	758	149	425	402	563	137	390	370	518	
63	64.14	28	118803	349	0.0718	200	543	541	730	149	404	402	542	137	371	370	499	
71	69.88	26	114019	308	0.0700	200	533	541	730	149	396	402	542	137	364	370	499	
80	79.50	23	118803	282	0.0656	200	515	541	730	149	383	402	542	137	352	370	499	
90	91.28	20	118803	245	0.0419	200	470	541	730	149	349	402	542	137	321	370	499	
100	99.45	18	114019	216	0.0410	200	461	541	730	149	343	402	542	137	315	370	499	
112	113.13	16	118803	198	0.0388	200	446	541	730	149	331	402	542	137	305	370	499	
80	80.75	22	118803	277	0.0580	153	465	406	616	114	345	302	458	105	317	277	421	E4H (x4)
90	90.01	20	118803	249	0.0562	150	445	406	590	111	330	302	438	102	304	277	403	
100	98.06	18	114019	219	0.0554	150	436	406	579	111	324	302	430	102	298	277	395	
112	115.53	16	118803	194	0.0325	150	436	406	579	111	324	302	430	102	298	277	395	
125	128.78	14	118803	174	0.0317	150	418	406	554	111	311	302	412	102	285	277	379	
140	140.30	13	114019	153	0.0312	150	411	406	546	111	306	302	405	102	281	277	373	
160	159.61	11	118803	140	0.0302	150	400	406	530	111	297	302	394	102	273	277	362	
180	178.86	10	118803	125	0.0186	150	390	406	517	111	289	302	384	102	266	277	353	
200	194.86	9	114019	110	0.0184	150	384	406	510	111	285	302	379	102	262	277	348	
224	221.68	8	118803	101	0.0178	150	373	406	495	111	277	302	368	102	255	277	338	
250	256.73	7	118803	87	0.0094	150	357	406	474	111	266	302	352	102	244	277	324	
280	286.18	6	118803	78	0.0092	150	343	406	455	111	255	302	338	102	235	277	311	
315	311.78	6	114019	69	0.0091	150	339	406	450	111	252	302	334	102	232	277	307	
355	354.69	5	118803	63	0.0089	150	329	406	437	111	245	302	324	102	225	277	298	
400	400.65	4	118803	56	0.0052	150	313	406	416	111	233	302	309	102	214	277	284	
450	436.49	4	114019	49	0.0051	150	309	406	410	111	230	302	305	102	211	277	280	
500	496.57	4	118803	45	0.0050	150	302	406	399	111	223	302	296	102	205	277	272	

E2H / E3H / E4H ...45 — SPLIT HOUSING — 50 Hz — 140 kNm

n_1 = 1000 rpm

i_N	i_{eff}	n_2 [rpm]	T_{2N} [Nm]	P_N [kW]	J [Kgm²]	R1 P_{t0} [kW]	R1	R1 H_2O	R1 +H_2O	S5 P_{t0} [kW]	S5	S5 H_2O	S5 +H_2O	T6 P_{t0} [kW]	T6	T6 H_2O	T6 +H_2O	Type
5	4.83	207	118673	2571	2.6743	592	1196	1314	1918	440	889	976	1425	405	817	897	1310	E2H (x2)
5.6	5.41	185	124014	2399	2.2346	576	1164	1278	1865	428	865	949	1386	394	795	873	1274	
6.3	6.08	165	129567	2233	1.8650	558	1126	1237	1805	414	837	919	1341	381	769	845	1233	
7.1	6.84	146	135120	2068	1.5519	536	1083	1189	1736	398	805	884	1290	366	740	812	1186	
8	7.73	129	139747	1892	1.3779	497	1004	1103	1610	370	746	819	1196	340	686	753	1100	
9	8.79	114	140206	1671	1.1312	488	985	1081	1578	362	732	803	1173	333	673	738	1078	
10	9.57	104	140206	1533	1.0361	459	927	1018	1486	341	689	756	1104	314	633	695	1015	
11.2	10.79	93	140206	1361	0.8060	445	898	986	1439	330	667	733	1069	304	613	673	983	
12.5	12.28	81	137497	1172	0.6914	423	854	938	1369	314	634	697	1017	289	583	640	935	
14	13.53	74	137497	1064	0.5992	396	800	879	1283	294	595	653	953	271	547	600	876	
16	15.74	64	137497	915	0.4544	368	743	816	1191	273	552	606	885	251	508	557	814	
18	17.55	57	137497	820	0.3958	361	698	766	1119	268	518	569	831	247	477	523	764	
20	19.12	52	135120	740	0.3640	361	685	752	1098	268	509	559	816	247	468	514	750	
22.4	21.75	46	134814	649	0.2894	361	522	732	845	268	388	544	628	247	357	500	577	
20	19.81	50	137497	727	0.4520	307	619	698	993	228	460	519	738	209	423	477	678	E3H (x3)
22.4	22.08	45	134814	639	0.4143	289	585	698	937	215	434	519	696	198	399	477	640	
25	24.05	42	134814	587	0.3947	284	573	698	919	211	426	519	683	194	392	477	628	
28	28.34	35	134814	498	0.2496	278	562	698	901	207	418	519	670	190	384	477	616	
31.5	31.59	32	134814	447	0.2312	264	533	698	854	196	396	519	635	180	364	477	583	
35.5	34.41	29	134814	410	0.2217	259	524	698	840	193	389	519	624	177	358	477	573	
40	39.15	26	129528	346	0.1988	249	503	698	808	185	374	519	600	170	344	477	552	
45	43.87	23	132158	315	0.1440	241	484	698	805	179	360	519	598	165	331	477	550	
50	47.80	21	132158	290	0.1390	241	476	698	805	179	354	519	598	165	325	477	550	
56	54.38	18	129528	249	0.1272	241	458	698	805	179	340	519	598	165	313	477	550	
63	62.97	16	132158	220	0.0778	241	431	698	805	179	320	519	598	165	294	477	550	
71	70.19	14	132158	197	0.0741	241	410	698	805	179	305	519	598	165	280	477	550	
80	76.47	13	132158	181	0.0721	241	405	698	805	179	301	519	598	165	276	477	550	
90	87.00	11	126925	153	0.0675	241	390	698	805	179	289	519	598	165	266	477	550	
100	99.89	10	132158	139	0.0433	241	358	698	805	179	266	519	598	165	245	477	550	
112	108.83	9	132158	127	0.0423	241	353	698	805	179	262	519	598	165	241	477	550	
125	123.81	8	133269	113	0.0401	241	348	698	805	179	259	519	598	165	238	477	550	
90	88.36	11	132158	157	0.0588	180	354	523	567	134	263	389	421	123	242	357	387	E4H (x4)
100	98.50	10	132158	140	0.0569	180	339	523	543	134	252	389	404	123	232	357	371	
112	107.31	9	132158	129	0.0559	180	334	523	535	134	248	389	398	123	228	357	366	
125	126.43	8	129528	107	0.0329	180	329	523	528	134	245	389	392	123	225	357	360	
140	140.93	7	129528	96	0.0320	180	316	523	506	134	235	389	376	123	216	357	346	
160	153.54	7	129528	88	0.0315	180	312	523	500	134	232	389	371	123	213	357	341	
180	174.67	6	133269	80	0.0304	180	302	523	485	134	225	389	360	123	207	357	331	
200	195.74	5	129528	69	0.0188	180	293	523	469	134	218	389	349	123	200	357	320	
224	213.25	5	129528	64	0.0185	180	289	523	464	134	215	389	344	123	198	357	317	
250	242.60	4	133269	58	0.0179	180	280	523	449	134	208	389	334	123	191	357	307	
280	280.95	4	129528	48	0.0095	180	269	523	433	134	199	389	320	123	183	357	294	
315	313.18	3	129528	43	0.0093	180	264	523	424	134	192	389	308	123	176	357	283	
355	341.19	3	129528	40	0.0092	180	262	523	423	134	190	389	305	123	175	357	280	
400	388.15	3	133269	36	0.0090	180	261	523	423	134	184	389	296	123	170	357	272	
450	438.45	2	129528	31	0.0052	180	261	523	423	134	177	389	284	123	163	357	261	
500	477.67	2	129528	28	0.0051	180	261	523	423	134	175	389	281	123	161	357	258	
560	543.42	2	133269	26	0.0050	180	261	523	423	134	170	389	273	123	157	357	251	

E2H / E3H / E4H ...45 — SPLIT HOUSING — 50 Hz — 140 kNm

n_1 = 1500 rpm

i_N	i_{eff}	n_2 [rpm]	T_{2N} [Nm]	P_N [kW]	J [Kgm²]	R1 P_{t0} [kW]	R1	R1 H_2O	R1 $+H_2O$	S5 P_{t0} [kW]	S5	S5 H_2O	S5 $+H_2O$	T6 P_{t0} [kW]	T6	T6 H_2O	T6 $+H_2O$	Type
5	4.83	310	118673	3857	2.6743	556	1604	1233	2281	413	1192	916	1695	380	1096	842	1558	
5.6	5.41	277	124014	3598	2.2346	546	1575	1211	2240	406	1170	900	1664	373	1076	827	1530	
6.3	6.08	247	129567	3349	1.8650	533	1536	1181	2185	396	1142	877	1623	364	1049	806	1492	
7.1	6.84	219	135120	3102	1.5519	516	1488	1143	2115	383	1105	849	1572	352	1016	781	1445	
8	7.73	194	139747	2838	1.3779	481	1387	1066	1972	357	1030	792	1465	328	947	728	1347	
9	8.79	171	140206	2506	1.1312	474	1367	1050	1943	352	1016	780	1444	324	933	717	1327	
10	9.57	157	140206	2300	1.0361	447	1290	992	1835	332	959	737	1363	305	881	677	1253	E2H (x2)
11.2	10.79	139	140206	2042	0.8060	435	1256	965	1786	323	933	717	1327	297	858	659	1220	
12.5	12.28	122	137497	1758	0.6914	416	1199	922	1705	309	891	685	1267	284	819	630	1165	
14	13.53	111	137497	1596	0.5992	391	1127	866	1602	290	837	643	1190	267	770	591	1094	
16	15.74	95	137497	1372	0.4544	364	1049	806	1492	270	780	599	1109	248	717	551	1019	
18	17.55	85	137497	1231	0.3958	361	986	758	1402	268	732	563	1041	247	673	517	957	
20	19.12	78	135120	1110	0.3640	361	968	744	1376	268	719	553	1023	247	661	508	940	
22.4	21.75	69	134814	974	0.2894	361	702	732	971	268	522	544	721	247	479	500	663	
20	19.81	76	137497	1090	0.4520	297	856	698	1217	220	636	519	904	203	585	477	831	
22.4	22.08	68	134814	959	0.4143	280	806	698	1147	208	599	519	852	191	551	477	783	
25	24.05	62	134814	880	0.3947	274	790	698	1123	203	587	519	835	187	540	477	767	
28	28.34	53	134814	747	0.2496	270	780	698	1109	201	580	519	824	185	533	477	758	
31.5	31.59	47	134814	670	0.2312	256	737	698	1049	190	548	519	779	175	504	477	716	
35.5	34.41	44	134814	615	0.2217	251	724	698	1029	186	538	519	765	171	494	477	703	
40	39.15	38	129528	520	0.1988	241	692	698	984	179	514	519	731	165	473	477	672	
45	43.87	34	132158	473	0.1440	241	670	698	953	179	498	519	708	165	458	477	651	E3H (x3)
50	47.80	31	132158	434	0.1390	241	659	698	937	179	490	519	696	165	450	477	640	
56	54.38	28	129528	374	0.1272	241	632	698	925	179	470	519	687	165	432	477	632	
63	62.97	24	132158	330	0.0778	241	598	698	925	179	444	519	687	165	408	477	632	
71	70.19	21	132158	296	0.0741	241	568	698	925	179	422	519	687	165	388	477	632	
80	76.47	20	132158	271	0.0721	241	560	698	925	179	416	519	687	165	382	477	632	
90	87.00	17	126925	229	0.0675	241	539	698	925	179	400	519	687	165	368	477	632	
100	99.89	15	132158	208	0.0433	241	493	698	925	179	366	519	687	165	337	477	632	
112	108.83	14	132158	191	0.0423	241	486	698	925	179	361	519	687	165	332	477	632	
125	123.81	12	133269	169	0.0401	241	469	698	925	179	349	519	687	165	321	477	632	
90	88.36	17	132158	235	0.0588	180	486	523	691	134	361	389	513	123	332	357	472	
100	98.50	15	132158	211	0.0569	180	465	523	661	134	346	389	491	123	318	357	452	
112	107.31	14	132158	193	0.0559	180	458	523	651	134	340	389	484	123	313	357	445	
125	126.43	12	129528	161	0.0329	180	456	523	649	134	339	389	482	123	312	357	443	
140	140.93	11	129528	144	0.0320	180	438	523	622	134	325	389	462	123	299	357	425	
160	153.54	10	129528	133	0.0315	180	432	523	614	134	321	389	456	123	295	357	419	
180	174.67	9	133269	120	0.0304	180	419	523	595	134	311	389	442	123	286	357	407	
200	195.74	8	129528	104	0.0188	180	408	523	580	134	303	389	431	123	279	357	396	E4H (x4)
224	213.25	7	129528	95	0.0185	180	403	523	573	134	299	389	426	123	275	357	391	
250	242.60	6	133269	86	0.0179	180	391	523	556	134	290	389	413	123	267	357	379	
280	280.95	5	129528	72	0.0095	180	375	523	533	134	278	389	396	123	256	357	364	
315	313.18	5	129528	65	0.0093	180	361	523	512	134	267	389	380	123	246	357	350	
355	341.19	4	129528	60	0.0092	180	359	523	506	134	265	389	376	123	243	357	346	
400	388.15	4	133269	54	0.0090	180	353	523	496	134	257	389	365	123	236	357	335	
450	438.45	3	129528	46	0.0052	180	351	523	486	134	245	389	349	123	225	357	320	
500	477.67	3	129528	43	0.0051	180	351	523	486	134	243	389	345	123	223	357	317	
560	543.42	3	133269	39	0.0050	180	351	523	486	134	235	389	335	123	216	357	308	

E2H / E3H / E4H ...45 — SPLIT HOUSING — 60 Hz — 140 kNm

	i_N	i_{eff}	n_2 [rpm]	T_{2N} [Nm]	P_N [kW]	J [Kgm²]	R1 P_{t0} [kW]	R1	R1 H_2O	R1 +H_2O	S5 P_{t0} [kW]	S5	S5 H_2O	S5 +H_2O	T6 P_{t0} [kW]	T6	T6 H_2O	T6 +H_2O	Type
n_1 = 1200 rpm	5	4.83	248	118673	3085	2.6743	577	1365	1280	2068	429	1014	951	1536	394	932	874	1412	E2H (x2)
	5.6	5.41	222	124014	2879	2.2346	563	1333	1249	2019	419	990	928	1500	385	910	853	1379	
	6.3	6.08	197	129567	2679	1.8650	547	1294	1213	1959	406	961	901	1456	373	884	828	1338	
	7.1	6.84	175	135120	2482	1.5519	527	1248	1169	1890	392	927	869	1404	360	852	799	1291	
	8	7.73	155	139747	2271	1.3779	490	1160	1087	1756	364	862	808	1305	335	792	742	1200	
	9	8.79	137	140206	2005	1.1312	482	1140	1068	1726	358	847	794	1283	329	778	730	1179	
	10	9.57	125	140206	1840	1.0361	454	1074	1007	1627	337	798	748	1209	310	734	688	1111	
	11.2	10.79	111	140206	1633	0.8060	441	1043	978	1580	328	775	726	1174	301	712	668	1079	
	12.5	12.28	98	137497	1407	0.6914	420	994	931	1505	312	738	692	1118	287	679	636	1028	
	14	13.53	89	137497	1277	0.5992	394	932	874	1412	293	693	649	1049	269	637	597	964	
	16	15.74	76	137497	1097	0.4544	366	866	812	1312	272	644	603	975	250	592	555	896	
	18	17.55	68	137497	985	0.3958	361	813	762	1232	268	604	566	915	247	555	521	841	
	20	19.12	63	135120	888	0.3640	361	798	748	1209	268	593	556	898	247	545	511	826	
	22.4	21.75	55	134814	779	0.2894	361	525	732	845	268	390	544	628	247	358	500	577	
	20	19.81	61	137497	872	0.4520	302	715	698	1083	224	531	519	804	206	488	477	739	E3H (x3)
	22.4	22.08	54	134814	767	0.4143	285	674	698	1021	212	501	519	758	195	460	477	697	
	25	24.05	50	134814	704	0.3947	279	661	698	1000	207	491	519	743	191	451	477	683	
	28	28.34	42	134814	598	0.2496	275	650	698	984	204	483	519	731	188	444	477	672	
	31.5	31.59	38	134814	536	0.2312	260	615	698	931	193	457	519	692	178	420	477	636	
	35.5	34.41	35	134814	492	0.2217	255	604	698	915	190	449	519	680	174	413	477	625	
	40	39.15	31	129528	416	0.1988	245	579	698	877	182	430	519	652	167	395	477	599	
	45	43.87	27	132158	379	0.1440	241	559	698	847	179	415	519	629	165	382	477	578	
	50	47.80	25	132158	347	0.1390	241	550	698	833	179	409	519	619	165	376	477	569	
	56	54.38	22	129528	299	0.1272	241	528	698	805	179	393	519	598	165	361	477	550	
	63	62.97	19	132158	264	0.0778	241	498	698	805	179	370	519	598	165	340	477	550	
	71	70.19	17	132158	237	0.0741	241	474	698	805	179	352	519	598	165	324	477	550	
	80	76.47	16	132158	217	0.0721	241	467	698	805	179	347	519	598	165	319	477	550	
	90	87.00	14	126925	183	0.0675	241	450	698	805	179	334	519	598	165	307	477	550	
	100	99.89	12	132158	166	0.0433	241	412	698	805	179	306	519	598	165	282	477	550	
	112	108.83	11	132158	153	0.0423	241	406	698	805	179	302	519	598	165	277	477	550	
	125	123.81	10	133269	135	0.0401	241	392	698	805	179	291	519	598	165	268	477	550	
	90	88.36	14	132158	188	0.0588	180	407	523	617	134	303	389	458	123	278	357	421	E4H (x4)
	100	98.50	12	132158	169	0.0569	180	390	523	591	134	290	389	439	123	266	357	404	
	112	107.31	11	132158	155	0.0559	180	384	523	582	134	286	389	433	123	263	357	398	
	125	126.43	9	129528	129	0.0329	180	381	523	577	134	283	389	428	123	260	357	394	
	140	140.93	9	129528	115	0.0320	180	365	523	553	134	271	389	411	123	249	357	378	
	160	153.54	8	129528	106	0.0315	180	360	523	546	134	268	389	406	123	246	357	373	
	180	174.67	7	133269	96	0.0304	180	350	523	529	134	260	389	393	123	239	357	362	
	200	195.74	6	129528	83	0.0188	180	339	523	514	134	252	389	382	123	232	357	351	
	224	213.25	6	129528	76	0.0185	180	335	523	508	134	249	389	377	123	229	357	347	
	250	242.60	5	133269	69	0.0179	180	325	523	492	134	241	389	366	123	222	357	336	
	280	280.95	4	129528	58	0.0095	180	311	523	471	134	231	389	350	123	212	357	322	
	315	313.18	4	129528	52	0.0093	180	299	523	453	134	222	389	337	123	204	357	309	
	355	341.19	4	129528	48	0.0092	180	296	523	448	134	220	389	333	123	202	357	306	
	400	388.15	3	133269	43	0.0090	180	287	523	435	134	213	389	323	123	196	357	297	
	450	438.45	3	129528	37	0.0052	180	275	523	427	134	204	389	310	123	188	357	285	
	500	477.67	3	129528	34	0.0051	180	272	523	425	134	202	389	306	123	186	357	282	
	560	543.42	2	133269	31	0.0050	180	267	523	423	134	196	389	297	123	181	357	273	

E2H / E3H / E4H ...45 — SPLIT HOUSING — 60 Hz — 140 kNm

n_1 = 1800 rpm

i_N	i_{eff}	n_2 [rpm]	T_{2N} [Nm]	P_N [kW]	J [Kgm²]	R1 P_{t0} [kW]	R1	R1 H_2O	R1 $+H_2O$	S5 P_{t0} [kW]	S5	S5 H_2O	S5 $+H_2O$	T6 P_{t0} [kW]	T6	T6 H_2O	T6 $+H_2O$	Type
5	4.83	372	118673	4628	2.6743	536	1638	1188	2291	398	1217	883	1702	366	1119	811	1564	E2H (x2)
5.6	5.41	333	124014	4318	2.2346	529	1618	1173	2263	393	1202	872	1681	361	1105	801	1545	
6.3	6.08	296	129567	4019	1.8650	519	1586	1150	2218	385	1179	855	1648	354	1084	786	1515	
7.1	6.84	263	135120	3723	1.5519	504	1543	1118	2157	375	1146	831	1602	344	1054	764	1473	
8	7.73	233	139747	3406	1.3779	472	1443	1046	2018	351	1072	777	1499	322	986	715	1378	
9	8.79	205	140206	3007	1.1312	466	1425	1034	1993	346	1059	768	1481	318	974	706	1361	
10	9.57	188	140206	2760	1.0361	441	1347	977	1884	327	1001	726	1400	301	920	667	1287	
11.2	10.79	167	140206	2450	0.8060	430	1314	953	1837	319	976	708	1365	293	897	651	1254	
12.5	12.28	147	137497	2110	0.6914	411	1257	911	1757	305	934	677	1305	281	858	622	1200	
14	13.53	133	137497	1915	0.5992	387	1182	857	1653	287	878	637	1228	264	807	585	1129	
16	15.74	114	137497	1646	0.4544	362	1103	800	1542	269	819	594	1146	247	753	546	1053	
18	17.55	103	137497	1477	0.3958	361	1037	752	1450	268	771	559	1077	247	708	514	990	
20	19.12	94	135120	1332	0.3640	361	1019	739	1425	268	757	549	1059	247	696	505	973	
22.4	21.75	83	134814	1168	0.2894	361	702	732	971	268	522	544	721	247	479	500	663	
20	19.81	91	137497	1309	0.4520	291	891	698	1246	217	662	519	926	199	609	477	851	E3H (x3)
22.4	22.08	82	134814	1151	0.4143	275	840	698	1174	204	624	519	872	188	574	477	802	
25	24.05	75	134814	1056	0.3947	269	823	698	1150	200	611	519	855	184	562	477	786	
28	28.34	64	134814	897	0.2496	267	817	698	1142	198	607	519	848	182	558	477	780	
31.5	31.59	57	134814	804	0.2312	252	771	698	1078	187	573	519	801	172	527	477	736	
35.5	34.41	52	134814	738	0.2217	247	756	698	1058	184	562	519	786	169	517	477	722	
40	39.15	46	129528	624	0.1988	241	722	698	1009	179	536	519	750	165	493	477	689	
45	43.87	41	132158	568	0.1440	241	701	698	980	179	521	519	728	165	479	477	670	
50	47.80	38	132158	521	0.1390	241	689	698	963	179	512	519	715	165	470	477	658	
56	54.38	33	129528	449	0.1272	241	659	698	925	179	490	519	688	165	450	477	632	
63	62.97	29	132158	396	0.0778	241	626	698	925	179	465	519	687	165	427	477	632	
71	70.19	26	132158	355	0.0741	241	595	698	925	179	442	519	687	165	406	477	632	
80	76.47	24	132158	326	0.0721	241	585	698	925	179	435	519	687	165	400	477	632	
90	87.00	21	126925	275	0.0675	241	563	698	925	179	418	519	687	165	384	477	632	
100	99.89	18	132158	249	0.0433	241	515	698	925	179	383	519	687	165	352	477	632	
112	108.83	17	132158	229	0.0423	241	507	698	925	179	377	519	687	165	346	477	632	
125	123.81	15	133269	203	0.0401	241	490	698	925	179	364	519	687	165	334	477	632	
90	88.36	20	132158	282	0.0588	180	505	523	707	134	375	389	525	123	345	357	483	E4H (x4)
100	98.50	18	132158	253	0.0569	180	483	523	675	134	359	389	502	123	330	357	461	
112	107.31	17	132158	232	0.0559	180	476	523	665	134	353	389	494	123	325	357	454	
125	126.43	14	129528	193	0.0329	180	476	523	666	134	354	389	495	123	325	357	455	
140	140.93	13	129528	173	0.0320	180	456	523	638	134	339	389	474	123	312	357	436	
160	153.54	12	129528	159	0.0315	180	450	523	629	134	334	389	468	123	307	357	430	
180	174.67	10	133269	144	0.0304	180	437	523	611	134	325	389	454	123	298	357	417	
200	195.74	9	129528	125	0.0188	180	427	523	597	134	317	389	444	123	292	357	408	
224	213.25	8	129528	114	0.0185	180	422	523	589	134	313	389	438	123	288	357	403	
250	242.60	7	133269	104	0.0179	180	409	523	572	134	304	389	425	123	279	357	390	
280	280.95	6	129528	87	0.0095	180	393	523	550	134	292	389	408	123	269	357	375	
315	313.18	6	129528	78	0.0093	180	378	523	528	134	281	389	392	123	258	357	361	
355	341.19	5	129528	72	0.0092	180	374	523	522	134	278	389	388	123	255	357	357	
400	388.15	5	133269	65	0.0090	180	362	523	506	134	269	389	376	123	247	357	346	
450	438.45	4	129528	56	0.0052	180	354	523	493	134	257	389	359	123	236	357	330	
500	477.67	4	129528	51	0.0051	180	352	523	490	134	254	389	355	123	233	357	326	
560	543.42	3	133269	46	0.0050	180	351	523	486	134	246	389	344	123	226	357	316	

E2H / E3H / E4H ...47 — SPLIT HOUSING — 50 Hz — 178 kNm

	i_N	i_{eff}	n_2 [rpm]	T_{2N} [Nm]	P_N [kW]	J [Kgm²]	R1 P_{t0} [kW]	R1	R1 H_2O	R1 +H_2O	S5 P_{t0} [kW]	S5	S5 H_2O	S5 +H_2O	T6 P_{t0} [kW]	T6	T6 H_2O	T6 +H_2O	Type
n_1 = 1000 rpm	**6.3**	6.00	167	152148	2655	3.4750	729	1486	1458	2215	541	1104	1083	1646	498	1015	996	1513	E2H (x2)
	7.1	6.72	149	153259	2388	2.8729	709	1445	1418	2154	526	1074	1053	1600	484	987	968	1471	
	8	7.54	133	159922	2220	2.3715	687	1400	1374	2087	510	1040	1021	1551	469	956	938	1425	
	9	8.49	118	167696	2068	1.9515	661	1349	1323	2010	491	1002	983	1494	452	921	904	1373	
	10	9.60	104	173249	1890	1.6906	614	1251	1228	1866	456	930	912	1386	419	855	839	1274	
	11.2	10.91	92	178191	1710	1.3734	603	1229	1206	1832	448	913	896	1361	412	839	824	1251	
	12.5	11.89	84	178191	1570	1.2401	568	1157	1136	1725	422	860	844	1282	388	790	776	1178	
	14	13.39	75	178191	1394	0.9668	550	1122	1101	1673	409	834	818	1243	376	767	752	1143	
	16	15.25	66	178191	1224	0.8154	524	1068	1048	1593	389	794	779	1183	358	730	716	1088	
	18	16.80	60	178191	1111	0.7013	491	1001	982	1492	365	744	730	1109	335	684	671	1019	
	20	19.54	51	174845	937	0.5299	456	930	913	1387	339	691	678	1030	312	635	623	947	
	22.4	21.78	46	174845	840	0.4566	437	873	857	1301	325	649	636	967	298	596	585	889	
	25	23.73	42	166586	735	0.4151	437	858	841	1278	325	637	625	950	298	586	575	873	
	28	27.00	37	174845	678	0.3289	437	632	785	871	325	470	583	647	298	432	536	595	
	25	24.59	41	174845	745	0.4997	381	776	762	1157	283	577	566	860	260	530	520	791	E3H (x3)
	28	27.41	36	174845	668	0.4527	360	733	748	1093	267	545	556	812	246	501	511	747	
	31.5	29.86	33	168807	592	0.4271	353	719	748	1072	262	534	556	797	241	491	511	732	
	35.5	35.18	28	171531	511	0.2729	346	705	748	1051	257	524	556	781	236	482	511	718	
	40	39.21	26	171531	458	0.2500	327	668	748	996	243	496	556	740	224	456	511	680	
	45	42.72	23	168807	414	0.2374	322	657	748	979	239	488	556	728	220	449	511	669	
	50	48.60	21	161777	349	0.2110	309	631	748	941	230	469	556	699	211	431	511	642	
	56	54.46	18	171531	330	0.1537	297	606	748	904	221	451	556	672	203	414	511	617	
	63	59.33	17	168248	297	0.1472	293	597	748	891	218	444	556	662	200	408	511	608	
	71	67.50	15	158590	246	0.1335	291	574	748	878	216	427	556	652	199	392	511	600	
	80	78.17	13	168248	225	0.0825	291	539	748	878	216	401	556	652	199	368	511	600	
	90	87.14	11	168248	202	0.0779	291	513	748	878	216	381	556	652	199	350	511	600	
	100	94.93	11	164997	182	0.0753	291	505	748	878	216	376	556	652	199	345	511	600	
	112	108.00	9	155434	151	0.0700	291	487	748	878	216	362	556	652	199	333	511	600	
	125	124.00	8	168248	142	0.0452	291	447	748	878	216	332	556	652	199	305	511	600	
	140	135.10	7	164997	128	0.0439	291	441	748	878	216	327	556	652	199	301	511	600	
	160	153.69	7	155434	106	0.0413	291	423	748	878	216	314	556	652	199	289	511	600	
	112	109.69	9	168248	161	0.0612	219	442	561	659	163	328	417	489	150	302	383	450	E4H (x4)
	125	122.27	8	168248	144	0.0588	218	424	561	631	162	315	417	469	149	289	383	431	
	140	133.21	8	164997	130	0.0575	218	418	561	623	162	311	417	463	149	285	383	426	
	160	156.94	6	168248	112	0.0341	218	411	561	613	162	305	417	455	149	281	383	419	
	180	174.95	6	168248	101	0.0329	218	394	561	588	162	293	417	437	149	269	383	402	
	200	190.60	5	161777	89	0.0323	218	390	561	581	162	290	417	432	149	266	383	397	
	224	216.83	5	155434	75	0.0310	218	377	561	562	162	280	417	417	149	257	383	384	
	250	242.98	4	164997	71	0.0193	218	365	561	544	162	271	417	404	149	249	383	372	
	280	264.72	4	161777	64	0.0190	218	361	561	538	162	268	417	400	149	247	383	368	
	315	301.15	3	174845	61	0.0183	218	350	561	522	162	260	417	388	149	239	383	357	
	355	348.76	3	164997	50	0.0097	218	334	561	498	162	248	417	370	149	228	383	340	
	400	388.77	3	164997	44	0.0095	218	324	561	480	162	239	417	356	149	220	383	328	
	450	423.55	2	158590	39	0.0094	218	322	561	475	162	237	417	353	149	218	383	325	
	500	481.85	2	174845	38	0.0091	218	317	561	461	162	230	417	343	149	211	383	315	
	560	544.28	2	164997	32	0.0053	218	316	561	447	162	221	417	329	149	203	383	302	
	630	592.97	2	158590	28	0.0052	218	316	561	445	162	218	417	326	149	201	383	299	
	710	674.58	1	174845	27	0.0051	218	316	561	438	162	212	417	316	149	195	383	290	

E2H / E3H / E4H ...47 — SPLIT HOUSING — 50 Hz — 178 kNm

n_1 = 1500 rpm

i_N	i_{eff}	n_2 [rpm]	T_{2N} [Nm]	P_N [kW]	J [Kgm²]	R1 P_{t0} [kW]	R1	R1 H_2O	R1 $+H_2O$	S5 P_{t0} [kW]	S5	S5 H_2O	S5 $+H_2O$	T6 P_{t0} [kW]	T6	T6 H_2O	T6 $+H_2O$	Type
6.3	6.00	250	152148	3983	3.4750	684	1991	1368	2675	508	1479	1016	1988	467	1360	934	1827	
7.1	6.72	223	153259	3582	2.8729	670	1951	1340	2621	498	1450	996	1948	457	1333	915	1790	
8	7.54	199	159922	3330	2.3715	654	1904	1308	2558	486	1415	972	1901	446	1301	893	1747	
9	8.49	177	167696	3102	1.9515	634	1846	1268	2480	471	1371	942	1842	433	1261	866	1694	
10	9.60	156	173249	2835	1.6906	591	1721	1182	2312	439	1279	878	1718	404	1175	807	1579	
11.2	10.91	138	178191	2566	1.3734	583	1699	1167	2283	433	1262	867	1696	398	1161	797	1559	
12.5	11.89	126	178191	2355	1.2401	551	1605	1102	2156	409	1192	819	1602	376	1096	753	1472	E2H (x2)
14	13.39	112	178191	2090	0.9668	537	1564	1074	2101	399	1162	798	1561	367	1068	734	1435	
16	15.25	98	178191	1836	0.8154	513	1496	1027	2009	381	1111	763	1493	351	1021	702	1372	
18	16.80	89	178191	1666	0.7013	482	1405	965	1888	358	1044	717	1403	329	960	659	1289	
20	19.54	77	174845	1405	0.5299	449	1309	899	1759	334	973	668	1307	307	894	614	1202	
22.4	21.78	69	174845	1261	0.4566	437	1230	845	1653	325	914	628	1228	298	840	577	1129	
25	23.73	63	166586	1102	0.4151	437	1209	830	1625	325	898	617	1207	298	826	567	1110	
28	27.00	56	174845	1017	0.3289	437	850	785	1075	325	632	583	799	298	581	536	734	
25	24.59	61	174845	1117	0.4997	368	1071	748	1439	273	796	556	1069	251	732	511	983	
28	27.41	55	174845	1002	0.4527	347	1011	748	1358	258	751	556	1009	237	690	511	928	
31.5	29.86	50	168807	888	0.4271	340	990	748	1330	252	735	556	988	232	676	511	908	
35.5	35.18	43	171531	766	0.2729	336	977	748	1313	249	726	556	976	229	668	511	897	
40	39.21	38	171531	687	0.2500	317	924	748	1241	236	686	556	922	217	631	511	847	
45	42.72	35	168807	621	0.2374	311	907	748	1218	231	674	556	905	213	619	511	832	
50	48.60	31	161777	523	0.2110	298	867	748	1165	221	644	556	866	203	592	511	796	
56	54.46	28	171531	495	0.1537	291	840	748	1129	216	624	556	839	199	574	511	771	E3H (x3)
63	59.33	25	168248	445	0.1472	291	826	748	1110	216	614	556	825	199	564	511	758	
71	67.50	22	158590	369	0.1335	291	792	748	1064	216	588	556	790	199	541	511	727	
80	78.17	19	168248	338	0.0825	291	748	748	1023	216	556	556	760	199	511	511	699	
90	87.14	17	168248	303	0.0779	291	711	748	1023	216	528	556	760	199	485	511	699	
100	94.93	16	164997	273	0.0753	291	700	748	1023	216	520	556	760	199	478	511	699	
112	108.00	14	155434	226	0.0700	291	673	748	1023	216	500	556	760	199	460	511	699	
125	124.00	12	168248	213	0.0452	291	616	748	1023	216	457	556	760	199	420	511	699	
140	135.10	11	164997	192	0.0439	291	606	748	1023	216	451	556	760	199	414	511	699	
160	153.69	10	155434	159	0.0413	291	581	748	1023	216	432	556	760	199	397	511	699	
112	109.69	14	168248	241	0.0612	218	607	561	816	162	451	417	606	149	415	383	557	
125	122.27	12	168248	216	0.0588	218	581	561	781	162	432	417	580	149	397	383	533	
140	133.21	11	164997	195	0.0575	218	573	561	770	162	426	417	572	149	391	383	526	
160	156.94	10	168248	168	0.0341	218	570	561	766	162	424	417	569	149	389	383	523	
180	174.95	9	168248	151	0.0329	218	547	561	734	162	406	417	546	149	373	383	502	
200	190.60	8	161777	133	0.0323	218	540	561	725	162	401	417	539	149	368	383	495	
224	216.83	7	155434	113	0.0310	218	521	561	700	162	387	417	520	149	356	383	478	
250	242.98	6	164997	107	0.0193	218	509	561	684	162	378	417	508	149	348	383	467	E4H (x4)
280	264.72	6	161777	96	0.0190	218	503	561	676	162	374	417	502	149	344	383	462	
315	301.15	5	174845	91	0.0183	218	489	561	657	162	363	417	488	149	334	383	449	
355	348.76	4	164997	74	0.0097	218	467	561	627	162	347	417	466	149	319	383	428	
400	388.77	4	164997	67	0.0095	218	448	561	602	162	333	417	448	149	306	383	411	
450	423.55	4	158590	59	0.0094	218	444	561	596	162	330	417	443	149	303	383	407	
500	481.85	3	174845	57	0.0091	218	434	561	579	162	320	417	430	149	294	383	395	
560	544.28	3	164997	48	0.0053	218	425	561	555	162	305	417	410	149	281	383	377	
630	592.97	3	158590	42	0.0052	218	425	561	551	162	302	417	406	149	278	383	373	
710	674.58	2	174845	41	0.0051	218	425	561	542	162	292	417	393	149	269	383	361	

E2H / E3H / E4H ...47 — SPLIT HOUSING — 60 Hz — 178 kNm

	i_N	i_{eff}	n_2 [rpm]	T_{2N} [Nm]	P_N [kW]	J [Kgm²]	R1 P_{t0} [kW]	R1	R1 H_2O	R1 +H_2O	S5 P_{t0} [kW]	S5	S5 H_2O	S5 +H_2O	T6 P_{t0} [kW]	T6	T6 H_2O	T6 +H_2O	Type
n_1 = 1200 rpm	**6.3**	6.00	200	152148	3186	3.4750	709	1694	1419	2404	527	1259	1054	1786	484	1157	969	1642	E2H x2
	7.1	6.72	179	153259	2866	2.8729	692	1652	1384	2344	514	1228	1028	1742	472	1128	945	1601	
	8	7.54	159	159922	2664	2.3715	672	1605	1345	2278	499	1193	999	1693	459	1096	918	1556	
	9	8.49	141	167696	2481	1.9515	649	1550	1299	2200	482	1152	965	1634	443	1059	887	1502	
	10	9.60	125	173249	2268	1.6906	604	1442	1208	2046	448	1071	897	1520	412	985	825	1397	
	11.2	10.91	110	178191	2052	1.3734	594	1420	1189	2014	442	1055	883	1497	406	970	812	1376	
	12.5	11.89	101	178191	1884	1.2401	560	1339	1121	1900	416	995	833	1411	383	914	766	1297	
	14	13.39	90	178191	1672	0.9668	545	1301	1090	1847	405	967	810	1372	372	889	745	1261	
	16	15.25	79	178191	1469	0.8154	520	1241	1040	1762	386	922	773	1309	355	848	710	1203	
	18	16.80	71	178191	1333	0.7013	487	1164	975	1652	362	865	725	1228	333	795	666	1128	
	20	19.54	61	174845	1124	0.5299	453	1083	907	1537	337	805	674	1142	310	740	619	1049	
	22.4	21.78	55	174845	1009	0.4566	437	1017	851	1442	325	755	633	1072	298	694	582	985	
	25	23.73	51	166586	882	0.4151	437	999	836	1417	325	742	621	1053	298	682	571	968	
	28	27.00	44	174845	814	0.3289	437	643	785	912	325	478	583	678	298	439	536	623	
	25	24.59	49	174845	894	0.4997	375	896	752	1271	279	665	559	944	256	612	514	868	E3H x3
	28	27.41	44	174845	802	0.4527	354	845	748	1199	263	628	556	891	242	577	511	819	
	31.5	29.86	40	168807	710	0.4271	347	828	748	1175	258	615	556	873	237	566	511	803	
	35.5	35.18	34	171531	613	0.2729	341	814	748	1156	253	605	556	859	233	556	511	789	
	40	39.21	31	171531	550	0.2500	323	770	748	1093	240	572	556	812	220	526	511	747	
	45	42.72	28	168807	497	0.2374	317	757	748	1074	236	563	556	798	216	517	511	734	
	50	48.60	25	161777	418	0.2110	304	726	748	1030	226	539	556	765	208	496	511	704	
	56	54.46	22	171531	396	0.1537	293	700	748	994	218	520	556	738	200	478	511	679	
	63	59.33	20	168248	356	0.1472	291	689	748	978	216	512	556	727	199	471	511	668	
	71	67.50	18	158590	295	0.1335	291	662	748	940	216	492	556	698	199	452	511	642	
	80	78.17	15	168248	270	0.0825	291	623	748	886	216	463	556	658	199	425	511	605	
	90	87.14	14	168248	243	0.0779	291	592	748	878	216	440	556	652	199	405	511	600	
	100	94.93	13	164997	218	0.0753	291	583	748	878	216	434	556	652	199	399	511	600	
	112	108.00	11	155434	181	0.0700	291	562	748	878	216	417	556	652	199	384	511	600	
	125	124.00	10	168248	170	0.0452	291	515	748	878	216	382	556	652	199	351	511	600	
	140	135.10	9	164997	153	0.0439	291	507	748	878	216	377	556	652	199	346	511	600	
	160	153.69	8	155434	127	0.0413	291	486	748	878	216	361	556	652	199	332	511	600	
	112	109.69	11	168248	193	0.0612	218	509	561	722	162	378	417	536	149	347	383	493	E4H x4
	125	122.27	10	168248	173	0.0588	218	488	561	692	162	362	417	514	149	333	383	472	
	140	133.21	9	164997	156	0.0575	218	481	561	682	162	357	417	507	149	328	383	466	
	160	156.94	8	168248	135	0.0341	218	476	561	675	162	353	417	501	149	325	383	461	
	180	174.95	7	168248	121	0.0329	218	456	561	647	162	339	417	481	149	312	383	442	
	200	190.60	6	161777	107	0.0323	218	451	561	639	162	335	417	475	149	308	383	437	
	224	216.83	6	155434	90	0.0310	218	435	561	618	162	323	417	459	149	297	383	422	
	250	242.98	5	164997	85	0.0193	218	423	561	600	162	314	417	446	149	289	383	410	
	280	264.72	5	161777	77	0.0190	218	419	561	594	162	311	417	441	149	286	383	406	
	315	301.15	4	174845	73	0.0183	218	406	561	576	162	302	417	428	149	277	383	394	
	355	348.76	3	164997	59	0.0097	218	387	561	550	162	288	417	408	149	265	383	375	
	400	388.77	3	164997	53	0.0095	218	372	561	529	162	277	417	393	149	254	383	361	
	450	423.55	3	158590	47	0.0094	218	369	561	523	162	274	417	389	149	252	383	357	
	500	481.85	2	174845	46	0.0091	218	358	561	508	162	266	417	378	149	245	383	347	
	560	544.28	2	164997	38	0.0053	218	343	561	486	162	254	417	361	149	234	383	332	
	630	592.97	2	158590	34	0.0052	218	339	561	481	162	252	417	357	149	232	383	329	
	710	674.58	2	174845	33	0.0051	218	328	561	466	162	244	417	346	149	224	383	318	

E2H / E3H / E4H ...47 — SPLIT HOUSING — 60 Hz — 178 kNm

n_1 = 1800 rpm

i_N	i_{eff}	n_2 [rpm]	T_{2N} [Nm]	P_N [kW]	J [Kgm²]	R1 P_{t0} [kW]	R1	R1 H_2O	R1 $+H_2O$	S5 P_{t0} [kW]	S5	S5 H_2O	S5 $+H_2O$	T6 P_{t0} [kW]	T6	T6 H_2O	T6 $+H_2O$	Type
6.3	6.00	300	152148	4780	3.4750	659	2034	1318	2693	489	1511	979	2001	450	1389	900	1839	E2H (x2)
7.1	6.72	268	153259	4299	2.8729	649	2003	1298	2653	482	1489	964	1971	443	1368	887	1812	
8	7.54	239	159922	3996	2.3715	636	1965	1273	2602	473	1460	946	1934	435	1342	870	1777	
9	8.49	212	167696	3722	1.9515	619	1913	1239	2533	460	1421	921	1882	423	1306	846	1730	
10	9.60	188	173249	3401	1.6906	579	1789	1159	2369	431	1330	861	1760	396	1222	792	1618	
11.2	10.91	165	178191	3079	1.3734	573	1770	1147	2344	426	1315	852	1742	392	1209	783	1601	
12.5	11.89	151	178191	2826	1.2401	542	1674	1084	2216	403	1244	806	1647	370	1143	741	1514	
14	13.39	134	178191	2508	0.9668	529	1633	1058	2163	393	1214	786	1607	361	1116	723	1477	
16	15.25	118	178191	2203	0.8154	507	1565	1014	2072	377	1163	753	1540	346	1069	693	1415	
18	16.80	107	178191	1999	0.7013	477	1472	954	1949	354	1094	709	1448	326	1005	651	1331	
20	19.54	92	174845	1686	0.5299	445	1374	890	1820	331	1021	662	1352	304	939	608	1243	
22.4	21.78	83	174845	1513	0.4566	437	1293	838	1712	325	961	622	1272	298	883	572	1169	
25	23.73	76	166586	1323	0.4151	437	1271	824	1684	325	945	612	1251	298	868	563	1150	
28	27.00	67	174845	1221	0.3289	437	850	785	1085	325	632	583	806	298	581	536	741	
25	24.59	73	174845	1340	0.4997	361	1115	748	1476	268	828	556	1097	247	761	511	1008	E3H (x3)
28	27.41	66	174845	1202	0.4527	341	1052	748	1393	253	782	556	1035	233	719	511	952	
31.5	29.86	60	168807	1066	0.4271	333	1030	748	1363	248	765	556	1013	228	703	511	931	
35.5	35.18	51	171531	919	0.2729	331	1022	748	1354	246	760	556	1006	226	698	511	925	
40	39.21	46	171531	824	0.2500	313	966	748	1278	232	717	556	950	214	659	511	873	
45	42.72	42	168807	745	0.2374	307	947	748	1254	228	704	556	932	209	647	511	857	
50	48.60	37	161777	627	0.2110	293	904	748	1197	218	672	556	890	200	618	511	818	
56	54.46	33	171531	594	0.1537	291	879	748	1163	216	653	556	864	199	600	511	795	
63	59.33	30	168248	534	0.1472	291	863	748	1143	216	641	556	849	199	589	511	781	
71	67.50	27	158590	443	0.1335	291	825	748	1093	216	613	556	812	199	564	511	747	
80	78.17	23	168248	406	0.0825	291	783	748	1036	216	582	556	770	199	535	511	708	
90	87.14	21	168248	364	0.0779	291	744	748	1023	216	552	556	760	199	508	511	699	
100	94.93	19	164997	328	0.0753	291	731	748	1023	216	543	556	760	199	499	511	699	
112	108.00	17	155434	271	0.0700	291	702	748	1023	216	522	556	760	199	480	511	699	
125	124.00	15	168248	256	0.0452	291	643	748	1023	216	478	556	760	199	439	511	699	
140	135.10	13	164997	230	0.0439	291	633	748	1023	216	470	556	760	199	432	511	699	
160	153.69	12	155434	191	0.0413	291	606	748	1023	216	450	556	760	199	414	511	699	
112	109.69	16	168248	289	0.0612	218	631	561	836	162	469	417	621	149	431	383	571	E4H (x4)
125	122.27	15	168248	259	0.0588	218	604	561	800	162	449	417	594	149	413	383	546	
140	133.21	14	164997	233	0.0575	218	594	561	787	162	442	417	585	149	406	383	538	
160	156.94	11	168248	202	0.0341	218	595	561	788	162	442	417	586	149	407	383	538	
180	174.95	10	168248	181	0.0329	218	570	561	755	162	424	417	561	149	390	383	516	
200	190.60	9	161777	160	0.0323	218	563	561	745	162	418	417	553	149	384	383	509	
224	216.83	8	155434	135	0.0310	218	543	561	719	162	403	417	534	149	371	383	491	
250	242.98	7	164997	128	0.0193	218	533	561	705	162	396	417	524	149	364	383	482	
280	264.72	7	161777	115	0.0190	218	526	561	697	162	391	417	518	149	360	383	476	
315	301.15	6	174845	109	0.0183	218	512	561	678	162	380	417	503	149	350	383	463	
355	348.76	5	164997	89	0.0097	218	490	561	648	162	364	417	482	149	334	383	443	
400	388.77	5	164997	80	0.0095	218	470	561	623	162	350	417	463	149	321	383	425	
450	423.55	4	158590	71	0.0094	218	465	561	616	162	346	417	458	149	318	383	421	
500	481.85	4	174845	68	0.0091	218	452	561	598	162	336	417	444	149	309	383	409	
560	544.28	3	164997	57	0.0053	218	435	561	570	162	320	417	423	149	294	383	389	
630	592.97	3	158590	50	0.0052	218	433	561	563	162	316	417	418	149	290	383	385	
710	674.58	3	174845	49	0.0051	218	425	561	551	162	305	417	404	149	281	383	372	

E2H / E3H / E4H ...48 — SPLIT HOUSING — 50 Hz — 191 kNm

	i_N	i_{eff}	n_2 [rpm]	T_{2N} [Nm]	P_N [kW]	J [Kgm²]	R1 P_{t0} [kW]	R1	R1 H_2O	R1 +H_2O	S5 P_{t0} [kW]	S5	S5 H_2O	S5 +H_2O	T6 P_{t0} [kW]	T6	T6 H_2O	T6 +H_2O	Type
n_1 = 1000 rpm	4	3.91	256	177917	4765	2.7920	686	1419	1422	2156	509	1055	1057	1602	468	969	971	1472	E2H (x2)
	4.5	4.38	229	185629	4443	2.7920	668	1384	1386	2101	497	1028	1030	1561	456	945	947	1435	
	5	4.91	204	186875	3985	2.3334	647	1340	1343	2036	481	996	998	1513	442	916	917	1391	
	5.6	5.53	181	186875	3539	1.9608	625	1294	1296	1965	464	961	963	1460	427	884	886	1342	
	6.3	6.25	160	188121	3152	1.0895	599	1240	1242	1883	445	921	923	1399	409	847	848	1286	
	7.1	7.10	141	188121	2774	0.8437	571	1182	1184	1796	424	878	880	1334	390	807	809	1226	
	8	7.74	129	188121	2546	0.7107	573	1187	1189	1802	426	882	883	1339	392	811	812	1231	
	9	8.72	115	189367	2275	0.5600	523	1083	1085	1645	389	805	806	1222	357	740	741	1124	
	10	9.93	101	189367	1998	0.4319	441	913	915	1387	328	678	680	1030	301	624	625	947	
	11.2	10.94	91	189367	1813	0.3557	469	970	972	1473	348	721	722	1095	320	663	664	1006	
	12.5	12.72	79	189367	1558	1.1891	440	910	911	1382	327	676	677	1027	300	621	623	944	
	14	14.18	71	189367	1398	1.0501	437	841	842	1277	325	625	626	949	298	574	575	872	
	16	15.63	64	190613	1277	0.8946	437	829	830	1259	325	616	617	935	298	566	567	860	
	18	17.19	58	188739	1150	0.6960	437	781	787	1187	325	581	584	882	298	534	537	811	
	16	16.12	62	190613	1238	1.1827	346	716	861	1088	257	532	640	808	236	489	588	743	E3H (x3)
	18	17.96	56	190613	1111	1.0969	324	670	861	1017	240	498	640	756	221	457	588	695	
	20	19.79	51	185208	980	0.9949	319	661	861	1004	237	491	640	746	218	451	588	686	
	22.4	23.33	43	188739	847	0.6559	313	647	861	992	232	481	640	737	214	442	588	677	
	25	26.00	38	188739	760	0.6149	294	608	861	991	218	452	640	736	201	415	588	677	
	28	28.65	35	188125	688	0.5663	292	601	861	991	217	447	640	736	200	411	588	677	
	31.5	31.51	32	188739	627	0.5399	291	574	861	991	216	426	640	736	199	392	588	677	
	35.5	34.75	29	188739	569	0.4531	291	551	861	991	216	409	640	736	199	376	588	677	
	40	38.28	26	188739	516	0.4259	291	547	861	991	216	406	640	736	199	373	588	677	
	45	42.11	24	188739	469	0.4111	291	523	861	991	216	389	640	736	199	357	588	677	
	50	51.87	19	185092	374	0.1910	291	496	861	991	216	368	640	736	199	339	588	677	
	56	57.82	17	185092	335	0.1827	291	470	861	991	216	349	640	736	199	321	588	677	
	63	63.70	16	185092	304	0.1729	291	467	861	991	216	347	640	736	199	319	588	677	
	71	70.07	14	185092	277	0.1675	291	448	861	991	216	333	640	736	199	306	588	677	
	80	80.73	12	185092	240	0.1150	291	423	861	991	216	315	640	736	199	289	588	677	
	90	88.94	11	185092	218	0.1099	291	421	861	991	216	313	640	736	199	288	588	677	
	100	97.84	10	185092	198	0.1072	291	421	861	991	216	313	640	736	199	288	588	677	
	71	73.36	14	185092	264	0.1576	218	418	646	634	162	310	480	471	149	285	441	433	E4H (x4)
	80	81.78	12	185092	237	0.1535	218	395	646	600	162	293	480	446	149	270	441	410	
	90	90.10	11	185092	215	0.1486	218	390	646	592	162	289	480	440	149	266	441	404	
	100	104.97	10	185092	185	0.0883	218	391	646	594	162	291	480	441	149	267	441	406	
	112	117.01	9	185092	166	0.0863	218	370	646	562	162	275	480	418	149	253	441	384	
	125	128.91	8	181481	147	0.0839	218	365	646	555	162	271	480	412	149	249	441	379	
	140	141.80	7	181481	134	0.0826	218	350	646	531	162	260	480	395	149	239	441	363	
	160	162.51	6	181481	117	0.0615	218	342	646	519	162	254	480	386	149	233	441	354	
	180	179.04	6	181481	106	0.0602	218	338	646	513	162	251	480	381	149	231	441	350	
	200	196.94	5	181481	96	0.0596	218	324	646	492	162	241	480	366	149	221	441	336	
	224	233.26	4	181481	81	0.0285	218	316	646	473	162	231	480	351	149	213	441	323	
	250	260.02	4	181481	73	0.0281	218	316	646	450	162	220	480	334	149	202	441	307	
	280	286.46	3	181481	66	0.0276	218	316	646	445	162	218	480	330	149	200	441	304	
	315	315.10	3	181481	60	0.0273	218	316	646	436	162	209	480	318	149	192	441	292	
	355	357.52	3	181481	53	0.0169	218	316	646	436	162	197	480	299	149	181	441	275	
	400	393.88	3	181481	48	0.0167	218	316	646	436	162	195	480	297	149	179	441	273	
	450	433.27	2	181481	44	0.0165	218	316	646	436	162	188	480	286	149	173	441	263	

E2H / E3H / E4H ...48 SPLIT HOUSING 50 Hz 191 kNm

n_1 = 1500 rpm

i_N	i_{eff}	n_2 [rpm]	T_{2N} [Nm]	P_N [kW]	J [Kgm²]	R1 P_{t0} [kW]	R1	R1 H_2O	R1 +H_2O	S5 P_{t0} [kW]	S5	S5 H_2O	S5 +H_2O	T6 P_{t0} [kW]	T6	T6 H_2O	T6 +H_2O	Type
4	3.91	384	177917	7147	2.7920	628	1857	1302	2531	467	1380	968	1881	429	1268	889	1729	E2H (x2)
4.5	4.38	343	185629	6664	2.7920	619	1830	1283	2494	460	1360	953	1853	423	1250	876	1704	
5	4.91	305	186875	5977	2.3334	606	1791	1256	2441	450	1331	933	1814	414	1223	858	1667	
5.6	5.53	271	186875	5309	1.9608	590	1745	1224	2378	438	1296	909	1767	403	1192	836	1624	
6.3	6.25	240	188121	4728	1.0895	570	1685	1182	2297	423	1252	878	1706	389	1151	807	1569	
7.1	7.10	211	188121	4160	0.8437	547	1618	1135	2206	407	1202	843	1639	374	1105	775	1507	
8	7.74	194	188121	3818	0.7107	552	1632	1145	2225	410	1213	850	1653	377	1115	782	1519	
9	8.72	172	189367	3412	0.5600	507	1498	1051	2042	376	1113	781	1518	346	1023	718	1395	
10	9.93	151	189367	2996	0.4319	437	1268	889	1728	325	942	661	1284	298	866	607	1180	
11.2	10.94	137	189367	2719	0.3557	458	1355	950	1846	340	1006	706	1372	313	925	649	1261	
12.5	12.72	118	189367	2338	1.1891	437	1277	895	1740	325	949	665	1293	298	872	612	1189	
14	14.18	106	189367	2097	1.0501	437	1182	829	1611	325	878	616	1197	298	807	566	1100	
16	15.63	96	190613	1916	0.8946	437	1167	819	1591	325	867	608	1182	298	797	559	1087	
18	17.19	87	188741	1725	0.6960	437	1101	785	1501	325	818	583	1115	298	752	536	1025	
16	16.12	93	190613	1858	1.1827	336	995	861	1356	250	739	640	1007	230	679	588	926	E3H (x3)
18	17.96	83	190613	1667	1.0969	314	929	861	1267	233	691	640	941	215	635	588	865	
20	19.79	76	185208	1470	0.9949	310	916	861	1249	230	681	640	928	212	626	588	853	
22.4	23.33	64	188739	1271	0.6559	306	906	861	1235	228	673	640	917	209	619	588	843	
25	26.00	58	188739	1140	0.6149	291	848	861	1156	216	630	640	859	199	579	588	790	
28	28.65	52	188125	1032	0.5663	291	838	861	1145	216	623	640	851	199	572	588	782	
31.5	31.51	48	188739	941	0.5399	291	798	861	1136	216	593	640	844	199	545	588	776	
35.5	34.75	43	188739	853	0.4531	291	770	861	1136	216	572	640	844	199	526	588	776	
40	38.28	39	188739	774	0.4259	291	763	861	1136	216	567	640	844	199	521	588	776	
45	42.11	36	188739	704	0.4111	291	729	861	1136	216	541	640	844	199	498	588	776	
50	51.87	29	185092	560	0.1910	291	696	861	1136	216	517	640	844	199	476	588	776	
56	57.82	26	185092	503	0.1827	291	659	861	1136	216	490	640	844	199	450	588	776	
63	63.70	24	185092	456	0.1729	291	654	861	1136	216	486	640	844	199	447	588	776	
71	70.07	21	185092	415	0.1675	291	627	861	1136	216	466	640	844	199	429	588	776	
80	80.73	19	185092	360	0.1150	291	588	861	1136	216	437	640	844	199	402	588	776	
90	88.94	17	185092	327	0.1099	291	584	861	1136	216	434	640	844	199	399	588	776	
100	97.84	15	185092	297	0.1072	291	567	861	1136	216	421	640	844	199	387	588	776	
71	73.36	20	185092	396	0.1576	218	570	646	778	162	424	480	578	149	390	441	531	E4H (x4)
80	81.78	18	185092	355	0.1535	218	539	646	734	162	400	480	546	149	368	441	501	
90	90.10	17	185092	323	0.1486	218	531	646	724	162	395	480	538	149	363	441	495	
100	104.97	14	185092	277	0.0883	218	537	646	733	162	399	480	544	149	367	441	500	
112	117.01	13	185092	248	0.0863	218	508	646	693	162	377	480	515	149	347	441	473	
125	128.91	12	181481	221	0.0839	218	501	646	683	162	372	480	507	149	342	441	466	
140	141.80	11	181481	201	0.0826	218	479	646	653	162	356	480	486	149	327	441	446	
160	162.51	9	181481	175	0.0615	218	472	646	644	162	351	480	478	149	323	441	440	
180	179.04	8	181481	159	0.0602	218	467	646	636	162	347	480	473	149	319	441	434	
200	196.94	8	181481	145	0.0596	218	447	646	610	162	332	480	453	149	306	441	417	
224	233.26	6	181481	122	0.0285	218	433	646	590	162	322	480	438	149	296	441	403	
250	260.02	6	181481	110	0.0281	218	425	646	560	162	305	480	416	149	280	441	382	
280	286.46	5	181481	100	0.0276	218	425	646	553	162	302	480	411	149	277	441	378	
315	315.10	5	181481	90	0.0273	218	425	646	538	162	289	480	394	149	266	441	363	
355	357.52	4	181481	80	0.0169	218	425	646	538	162	271	480	369	149	249	441	339	
400	393.88	4	181481	72	0.0167	218	425	646	538	162	268	480	365	149	246	441	336	
450	433.27	3	181481	66	0.0165	218	425	646	538	162	258	480	352	149	237	441	323	

E2H / E3H / E4H ...48 — SPLIT HOUSING — 60 Hz — 191 kNm

n_1 = 1200 rpm

i_N	i_{eff}	n_2 [rpm]	T_{2N} [Nm]	P_N [kW]	J [Kgm²]	R1 P_{t0} [kW]	R1	R1 H_2O	R1 +H_2O	S5 P_{t0} [kW]	S5	S5 H_2O	S5 +H_2O	T6 P_{t0} [kW]	T6	T6 H_2O	T6 +H_2O	Type
4	3.91	307	177917	5718	2.7920	662	1605	1372	2315	492	1192	1020	1720	452	1096	937	1581	E2H (x2)
4.5	4.38	274	185629	5331	2.7920	648	1571	1344	2267	481	1167	998	1684	442	1073	918	1548	
5	4.91	244	186875	4782	2.3334	630	1528	1307	2205	468	1135	971	1638	430	1044	893	1506	
5.6	5.53	217	186875	4247	1.9608	610	1480	1266	2136	454	1100	941	1587	417	1011	865	1459	
6.3	6.25	192	188121	3782	1.0895	587	1423	1217	2053	436	1057	904	1525	401	972	831	1402	
7.1	7.10	169	188121	3328	0.8437	561	1361	1164	1964	417	1011	865	1459	383	929	795	1341	
8	7.74	155	188121	3055	0.7107	565	1369	1171	1976	419	1017	870	1468	386	935	800	1349	
9	8.72	138	189367	2730	0.5600	517	1253	1071	1807	384	931	796	1343	353	856	732	1235	
10	9.93	121	189367	2397	0.4319	438	1057	904	1525	326	785	672	1133	299	722	618	1042	
11.2	10.94	110	189367	2176	0.3557	464	1126	963	1625	345	837	716	1208	317	769	658	1110	
12.5	12.72	94	189367	1870	1.1891	438	1058	905	1527	325	786	673	1135	299	723	618	1043	
14	14.18	85	189367	1678	1.0501	437	978	837	1412	325	727	622	1049	298	668	572	964	
16	15.63	77	190613	1533	0.8946	437	965	825	1392	325	717	613	1035	298	659	564	951	
18	17.19	70	188740	1380	0.6960	437	910	785	1313	325	676	583	975	298	621	536	897	
16	16.12	74	190613	1486	1.1827	342	829	861	1196	254	616	640	889	233	566	588	817	E3H (x3)
18	17.96	67	190613	1333	1.0969	319	774	861	1118	237	575	640	830	218	529	588	763	
20	19.79	61	185208	1176	0.9949	315	764	861	1102	234	567	640	819	215	522	588	753	
22.4	23.33	51	188739	1017	0.6559	310	751	861	1083	230	558	640	805	211	513	588	740	
25	26.00	46	188739	912	0.6149	292	704	861	1016	217	523	640	755	200	481	588	694	
28	28.65	42	188125	825	0.5663	291	696	861	1004	216	517	640	746	199	475	588	686	
31.5	31.51	38	188739	753	0.5399	291	663	861	991	216	493	640	736	199	453	588	677	
35.5	34.75	35	188739	683	0.4531	291	639	861	991	216	475	640	736	199	436	588	677	
40	38.28	31	188739	620	0.4259	291	633	861	991	216	470	640	736	199	432	588	677	
45	42.11	28	188739	563	0.4111	291	606	861	991	216	450	640	736	199	414	588	677	
50	51.87	23	185092	448	0.1910	291	576	861	991	216	428	640	736	199	393	588	677	
56	57.82	21	185092	402	0.1827	291	546	861	991	216	405	640	736	199	373	588	677	
63	63.70	19	185092	365	0.1729	291	542	861	991	216	402	640	736	199	370	588	677	
71	70.07	17	185092	332	0.1675	291	520	861	991	216	386	640	736	199	355	588	677	
80	80.73	15	185092	288	0.1150	291	487	861	991	216	362	640	736	199	333	588	677	
90	88.94	13	185092	261	0.1099	291	484	861	991	216	359	640	736	199	330	588	677	
100	97.84	12	185092	238	0.1072	291	465	861	991	216	346	640	736	199	318	588	677	
71	73.36	16	185092	317	0.1576	218	479	646	691	162	356	480	514	149	327	441	472	E4H (x4)
80	81.78	15	185092	284	0.1535	218	453	646	653	162	336	480	485	149	309	441	446	
90	90.10	13	185092	258	0.1486	218	447	646	645	162	332	480	479	149	305	441	440	
100	104.97	11	185092	222	0.0883	218	450	646	650	162	335	480	483	149	307	441	444	
112	117.01	10	185092	199	0.0863	218	426	646	615	162	316	480	457	149	291	441	420	
125	128.91	9	181481	177	0.0839	218	420	646	606	162	312	480	450	149	287	441	414	
140	141.80	8	181481	161	0.0826	218	402	646	580	162	299	480	431	149	275	441	396	
160	162.51	7	181481	140	0.0615	218	395	646	569	162	293	480	423	149	269	441	389	
180	179.04	7	181481	127	0.0602	218	390	646	563	162	290	480	418	149	266	441	384	
200	196.94	6	181481	116	0.0596	218	374	646	540	162	278	480	401	149	255	441	369	
224	233.26	5	181481	98	0.0285	218	360	646	520	162	268	480	386	149	246	441	355	
250	260.02	5	181481	88	0.0281	218	342	646	493	162	254	480	367	149	234	441	337	
280	286.46	4	181481	80	0.0276	218	338	646	488	162	251	480	363	149	231	441	333	
315	315.10	4	181481	72	0.0273	218	325	646	469	162	241	480	348	149	222	441	320	
355	357.52	3	181481	64	0.0169	218	316	646	440	162	227	480	327	149	208	441	300	
400	393.88	3	181481	58	0.0167	218	316	646	437	162	224	480	324	149	206	441	298	
450	433.27	3	181481	53	0.0165	218	316	646	436	162	216	480	312	149	199	441	287	

E2H / E3H / E4H ...48 SPLIT HOUSING 60 Hz 191 kNm

n_1 = 1800 rpm

i_N	i_{eff}	n_2 [rpm]	T_{2N} [Nm]	P_N [kW]	J [Kgm²]	R1 P_{t0} [kW]	R1	R1 H_2O	R1 +H_2O	S5 P_{t0} [kW]	S5	S5 H_2O	S5 +H_2O	T6 P_{t0} [kW]	T6	T6 H_2O	T6 +H_2O	Type
4	3.91	460	177917	8576	2.7920	595	1866	1235	2505	442	1386	917	1862	407	1275	843	1711	E2H (x2)
4.5	4.38	411	185629	7997	2.7920	590	1850	1224	2485	439	1375	910	1846	403	1264	836	1697	
5	4.91	367	186875	7173	2.3334	581	1822	1206	2447	432	1354	896	1818	397	1245	823	1671	
5.6	5.53	326	186875	6371	1.9608	569	1785	1181	2397	423	1326	878	1781	389	1219	807	1637	
6.3	6.25	288	188121	5673	1.0895	553	1733	1146	2326	411	1287	852	1728	377	1183	783	1589	
7.1	7.10	253	188121	4992	0.8437	533	1671	1106	2244	396	1242	822	1667	364	1142	755	1533	
8	7.74	233	188121	4582	0.7107	539	1689	1118	2268	400	1255	830	1685	368	1154	763	1549	
9	8.72	206	189367	4095	0.5600	496	1556	1030	2090	369	1156	765	1553	339	1063	703	1427	
10	9.93	181	189367	3596	0.4319	437	1321	874	1774	325	981	649	1318	298	902	597	1211	
11.2	10.94	165	189367	3263	0.3557	451	1414	935	1898	335	1050	695	1410	308	966	639	1296	
12.5	12.72	141	189367	2805	1.1891	437	1336	884	1794	325	993	657	1333	298	913	604	1225	
14	14.18	127	189367	2517	1.0501	437	1239	820	1663	325	920	609	1236	298	846	560	1136	
16	15.63	115	190613	2299	0.8946	437	1225	811	1645	325	910	602	1222	298	837	554	1123	
18	17.19	105	188742	2069	0.6960	437	1156	785	1553	325	859	583	1154	298	790	536	1060	
16	16.12	112	190613	2229	1.1827	331	1037	861	1392	246	770	640	1034	226	708	588	951	E3H (x3)
18	17.96	100	190613	2000	1.0969	309	969	861	1301	230	720	640	967	211	662	588	889	
20	19.79	91	185208	1764	0.9949	305	955	861	1283	226	710	640	953	208	652	588	876	
22.4	23.33	77	188739	1525	0.6559	303	951	861	1277	225	707	640	949	207	650	588	872	
25	26.00	69	188739	1368	0.6149	291	890	861	1195	216	662	640	888	199	608	588	816	
28	28.65	63	188125	1238	0.5663	291	879	861	1181	216	653	640	877	199	601	588	807	
31.5	31.51	57	188739	1129	0.5399	291	836	861	1136	216	621	640	844	199	571	588	776	
35.5	34.75	52	188739	1024	0.4531	291	809	861	1136	216	601	640	844	199	553	588	776	
40	38.28	47	188739	929	0.4259	291	801	861	1136	216	595	640	844	199	547	588	776	
45	42.11	43	188739	845	0.4111	291	764	861	1136	216	568	640	844	199	522	588	776	
50	51.87	35	185092	673	0.1910	291	733	861	1136	216	545	640	844	199	501	588	776	
56	57.82	31	185092	603	0.1827	291	693	861	1136	216	515	640	844	199	473	588	776	
63	63.70	28	185092	548	0.1729	291	688	861	1136	216	511	640	844	199	470	588	776	
71	70.07	26	185092	498	0.1675	291	659	861	1136	216	490	640	844	199	450	588	776	
80	80.73	22	185092	432	0.1150	291	619	861	1136	216	460	640	844	199	423	588	776	
90	88.94	20	185092	392	0.1099	291	615	861	1136	216	457	640	844	199	420	588	776	
100	97.84	18	185092	357	0.1072	291	591	861	1136	216	439	640	844	199	404	588	776	
71	73.36	25	185092	476	0.1576	218	593	646	796	162	441	480	592	149	405	441	544	E4H (x4)
80	81.78	22	185092	427	0.1535	218	559	646	751	162	416	480	558	149	382	441	513	
90	90.10	20	185092	387	0.1486	218	551	646	740	162	410	480	550	149	377	441	506	
100	104.97	17	185092	332	0.0883	218	560	646	751	162	416	480	558	149	382	441	513	
112	117.01	15	185092	298	0.0863	218	529	646	710	162	393	480	528	149	361	441	485	
125	128.91	14	181481	265	0.0839	218	521	646	700	162	387	480	520	149	356	441	478	
140	141.80	13	181481	241	0.0826	218	499	646	669	162	370	480	497	149	341	441	457	
160	162.51	11	181481	210	0.0615	218	492	646	661	162	366	480	491	149	336	441	452	
180	179.04	10	181481	191	0.0602	218	486	646	653	162	361	480	485	149	332	441	446	
200	196.94	9	181481	174	0.0596	218	466	646	626	162	346	480	465	149	319	441	428	
224	233.26	8	181481	147	0.0285	218	453	646	608	162	337	480	452	149	309	441	415	
250	260.02	7	181481	132	0.0281	218	430	646	577	162	319	480	428	149	293	441	394	
280	286.46	6	181481	119	0.0276	218	425	646	570	162	315	480	423	149	290	441	389	
315	315.10	6	181481	109	0.0273	218	425	646	546	162	302	480	406	149	278	441	373	
355	357.52	5	181481	96	0.0169	218	425	646	538	162	282	480	379	149	260	441	349	
400	393.88	5	181481	87	0.0167	218	425	646	538	162	280	480	375	149	257	441	345	
450	433.27	4	181481	79	0.0165	218	425	646	538	162	269	480	361	149	247	441	332	

E2H / E3H / E4H ..50 — SPLIT HOUSING — 50 Hz — 213 kNm

	i_N	i_{eff}	n_2 [rpm]	T_{2N} [Nm]	P_N [kW]	J [Kgm²]	R1 P_{t0} [kW]	R1	R1 H_2O	R1 +H_2O	S5 P_{t0} [kW]	S5	S5 H_2O	S5 +H_2O	T6 P_{t0} [kW]	T6	T6 H_2O	T6 +H_2O	Type
n_1 = 1000 rpm	4	3.91	256	185500	4973	3.6703	673	1393	1576	2296	500	1035	1171	1706	460	952	1076	1568	E2H x2
	4.5	4.38	229	198835	4759	3.0413	661	1367	1547	2254	491	1016	1149	1674	451	934	1056	1539	
	5	4.91	204	206310	4399	2.5311	642	1329	1503	2190	477	987	1117	1627	438	908	1027	1496	
	5.6	5.53	181	200330	3794	2.1168	620	1284	1452	2116	461	954	1079	1572	424	877	992	1445	
	6.3	6.25	160	207805	3482	1.2116	595	1231	1392	2029	442	915	1035	1507	406	841	951	1386	
	7.1	7.10	141	200330	2954	0.9382	567	1174	1328	1935	421	872	987	1438	387	802	907	1322	
	8	7.74	129	209300	2832	0.7904	569	1178	1333	1942	423	876	990	1443	389	805	910	1326	
	9	8.72	115	201825	2424	0.6229	519	1075	1216	1772	386	799	904	1317	355	735	831	1211	
	10	9.93	101	209300	2208	0.4803	439	905	1024	1492	326	673	761	1109	300	618	699	1019	
	11.2	10.94	91	201825	1932	0.3956	465	962	1088	1585	345	715	808	1178	317	657	743	1083	
	12.5	12.72	79	210795	1735	1.2186	438	903	1022	1489	326	671	759	1106	299	617	698	1017	
	14	14.18	71	203320	1501	1.0738	437	834	943	1374	325	619	701	1021	298	569	644	938	
	16	15.63	64	210795	1413	0.9141	437	823	931	1356	325	611	691	1007	298	562	636	926	
	18	17.19	58	210795	1284	0.8140	437	775	877	1278	325	576	652	950	298	530	599	873	
	16	16.12	62	203320	1321	1.2011	344	712	861	1173	255	529	640	871	235	486	588	801	E3H x3
	18	17.96	56	210795	1229	1.1116	322	666	861	1098	239	495	640	816	220	455	588	750	
	20	19.79	51	203320	1076	1.0071	318	658	861	1084	236	489	640	806	217	449	588	740	
	22.4	23.33	43	212290	953	0.6647	310	642	861	1059	231	477	640	787	212	439	588	723	
	25	26.00	38	203320	819	0.6220	293	604	861	998	218	449	640	742	200	412	588	682	
	28	28.65	35	212290	776	0.5721	292	599	861	994	217	445	640	738	199	409	588	679	
	31.5	31.51	32	213486	709	0.5447	291	571	861	991	216	425	640	736	199	390	588	677	
	35.5	34.75	29	212290	640	0.4571	291	547	861	991	216	407	640	736	199	374	588	677	
	40	38.28	26	204815	560	0.4291	291	543	861	991	216	404	640	736	199	371	588	677	
	45	42.11	24	213486	531	0.4138	291	520	861	991	216	387	640	736	199	355	588	677	
	50	51.87	19	204815	413	0.1928	291	493	861	991	216	366	640	736	199	337	588	677	
	56	57.82	17	212290	384	0.1841	291	466	861	991	216	347	640	736	199	319	588	677	
	63	63.70	16	204815	337	0.1740	291	465	861	991	216	345	640	736	199	318	588	677	
	71	70.07	14	209238	313	0.1685	291	446	861	991	216	331	640	736	199	305	588	677	
	80	80.73	12	204815	266	0.1157	291	422	861	991	216	314	640	736	199	288	588	677	
	90	88.94	11	209238	246	0.1105	291	421	861	991	216	313	640	736	199	288	588	677	
	100	97.84	10	212290	227	0.1077	291	421	861	991	216	313	640	736	199	288	588	677	
	71	73.36	14	209238	299	0.1585	218	418	646	689	162	311	480	512	149	285	441	470	E4H x4
	80	81.78	12	209238	268	0.1542	218	395	646	651	162	294	480	484	149	270	441	445	
	90	90.10	11	204815	238	0.1492	218	390	646	643	162	290	480	478	149	267	441	439	
	100	104.97	10	209238	209	0.0887	218	393	646	647	162	292	480	481	149	268	441	442	
	112	117.01	9	204815	183	0.0866	218	372	646	612	162	276	480	455	149	254	441	418	
	125	128.91	8	209238	170	0.0842	218	367	646	606	162	273	480	450	149	251	441	414	
	140	141.80	7	196749	145	0.0828	218	351	646	578	162	261	480	430	149	240	441	395	
	160	162.51	6	209238	135	0.0617	218	344	646	568	162	256	480	422	149	235	441	388	
	180	179.04	6	204815	120	0.0604	218	341	646	561	162	253	480	417	149	233	441	383	
	200	196.94	5	196749	105	0.0597	218	326	646	538	162	242	480	400	149	223	441	367	
	224	233.26	4	204815	92	0.0286	218	317	646	520	162	234	480	386	149	215	441	355	
	250	260.02	4	205032	83	0.0281	218	316	646	494	162	223	480	367	149	205	441	337	
	280	286.46	3	204815	75	0.0276	218	316	646	489	162	221	480	363	149	203	441	334	
	315	315.10	3	209238	70	0.0274	218	316	646	471	162	212	480	350	149	195	441	321	
	355	357.52	3	204815	60	0.0170	218	316	646	444	162	200	480	330	149	184	441	303	
	400	393.88	3	200869	53	0.0167	218	316	646	439	162	198	480	326	149	182	441	300	
	450	433.27	2	209238	51	0.0165	218	316	646	436	162	191	480	315	149	176	441	290	

E2H / E3H / E4H ...50 — SPLIT HOUSING — 50 Hz — 213 kNm

n_1 = 1500 rpm

i_N	i_{eff}	n_2 [rpm]	T_{2N} [Nm]	P_N [kW]	J [Kgm²]	R1 P_{t0} [kW]	R1	R1 H_2O	R1 $+H_2O$	S5 P_{t0} [kW]	S5	S5 H_2O	S5 $+H_2O$	T6 P_{t0} [kW]	T6	T6 H_2O	T6 $+H_2O$	Type
4	3.91	384	185500	7459	3.6703	611	1807	1431	2627	454	1343	1063	1952	417	1234	977	1794	
4.5	4.38	343	198835	7138	3.0413	609	1802	1427	2620	453	1339	1060	1947	416	1231	975	1789	
5	4.91	305	206310	6599	2.5311	600	1774	1404	2578	446	1318	1043	1916	410	1211	959	1761	
5.6	5.53	271	200330	5691	2.1168	585	1731	1371	2517	435	1286	1018	1870	400	1182	936	1719	
6.3	6.25	240	207805	5222	1.2116	566	1675	1326	2435	421	1244	985	1809	387	1144	906	1663	
7.1	7.10	211	200330	4430	0.9382	545	1611	1275	2341	405	1197	948	1740	372	1100	871	1599	
8	7.74	194	209300	4248	0.7904	549	1624	1286	2360	408	1206	955	1754	375	1109	878	1612	E2H (x2)
9	8.72	172	201825	3637	0.6229	505	1492	1181	2169	375	1109	878	1612	345	1019	807	1481	
10	9.93	151	209300	3312	0.4803	437	1260	998	1832	325	937	742	1361	298	861	682	1251	
11.2	10.94	137	201825	2898	0.3956	455	1347	1066	1958	338	1001	792	1454	311	920	728	1337	
12.5	12.72	118	210795	2602	1.2186	437	1272	1007	1850	325	945	749	1374	298	869	688	1263	
14	14.18	106	203320	2252	1.0738	437	1175	930	1708	325	873	691	1269	298	803	636	1167	
16	15.63	96	210795	2119	0.9141	437	1163	921	1691	325	864	684	1256	298	795	629	1155	
18	17.19	87	210795	1926	0.8140	437	1096	868	1594	325	815	645	1184	298	749	593	1089	
16	16.12	93	203320	1982	1.2011	335	991	861	1440	249	736	640	1070	229	677	588	984	
18	17.96	83	210795	1843	1.1116	314	927	861	1348	233	689	640	1002	214	633	588	921	
20	19.79	76	203320	1614	1.0071	309	915	861	1330	230	680	640	988	211	625	588	909	
22.4	23.33	64	212290	1429	0.6647	305	902	861	1311	227	670	640	974	208	616	588	895	
25	26.00	58	203320	1228	0.6220	291	845	861	1228	216	628	640	912	199	577	588	839	
28	28.65	52	212290	1164	0.5721	291	837	861	1217	216	622	640	904	199	572	588	831	
31.5	31.51	48	213486	1064	0.5447	291	797	861	1158	216	592	640	860	199	544	588	791	
35.5	34.75	43	212290	960	0.4571	291	766	861	1136	216	569	640	844	199	523	588	776	
40	38.28	39	204815	840	0.4291	291	760	861	1136	216	565	640	844	199	519	588	776	E3H (x3)
45	42.11	36	213486	796	0.4138	291	727	861	1136	216	540	640	844	199	496	588	776	
50	51.87	29	204815	620	0.1928	291	693	861	1136	216	515	640	844	199	473	588	776	
56	57.82	26	212290	577	0.1841	291	655	861	1136	216	487	640	844	199	448	588	776	
63	63.70	24	204815	505	0.1740	291	653	861	1136	216	485	640	844	199	446	588	776	
71	70.07	21	209238	469	0.1685	291	626	861	1136	216	465	640	844	199	428	588	776	
80	80.73	19	204815	398	0.1157	291	586	861	1136	216	435	640	844	199	400	588	776	
90	88.94	17	209238	370	0.1105	291	583	861	1136	216	433	640	844	199	398	588	776	
100	97.84	15	212290	341	0.1077	291	567	861	1136	216	421	640	844	199	387	588	776	
71	73.36	20	209238	448	0.1585	218	568	646	826	162	422	480	613	149	388	441	564	
80	81.78	18	209238	402	0.1542	218	536	646	779	162	398	480	579	149	366	441	532	
90	90.10	17	204815	357	0.1492	218	528	646	768	162	393	480	571	149	361	441	525	
100	104.97	14	209238	313	0.0887	218	538	646	782	162	400	480	581	149	368	441	534	
112	117.01	13	204815	275	0.0866	218	509	646	739	162	378	480	549	149	347	441	505	
125	128.91	12	209238	255	0.0842	218	503	646	731	162	374	480	543	149	344	441	499	
140	141.80	11	196749	218	0.0828	218	479	646	697	162	356	480	518	149	327	441	476	
160	162.51	9	209238	202	0.0617	218	475	646	691	162	353	480	513	149	325	441	472	E4H (x4)
180	179.04	8	204815	180	0.0604	218	469	646	682	162	349	480	507	149	321	441	466	
200	196.94	8	196749	157	0.0597	218	449	646	653	162	334	480	485	149	307	441	446	
224	233.26	6	204815	138	0.0286	218	436	646	634	162	324	480	471	149	298	441	433	
250	260.02	6	205032	124	0.0281	218	425	646	602	162	308	480	447	149	283	441	411	
280	286.46	5	204815	112	0.0276	218	425	646	596	162	305	480	443	149	280	441	407	
315	315.10	5	209238	104	0.0274	218	425	646	573	162	293	480	426	149	269	441	391	
355	357.52	4	204815	90	0.0170	218	425	646	538	162	274	480	399	149	252	441	366	
400	393.88	4	200869	80	0.0167	218	425	646	538	162	271	480	394	149	249	441	362	
450	433.27	3	209238	76	0.0165	218	425	646	538	162	262	480	380	149	241	441	350	

E2H / E3H / E4H ..50 — SPLIT HOUSING — 60 Hz — 213 kNm

	i_N	i_{eff}	n_2 [rpm]	T_{2N} [Nm]	P_N [kW]	J [Kgm²]	R1 P_{t0} [kW]	R1	R1 H_2O	R1 +H_2O	S5 P_{t0} [kW]	S5	S5 H_2O	S5 +H_2O	T6 P_{t0} [kW]	T6	T6 H_2O	T6 +H_2O	Type
n_1 = 1200 rpm	4	3.91	307	185500	5967	3.6703	647	1570	1516	2438	481	1166	1126	1811	442	1072	1035	1665	E2H x2
	4.5	4.38	274	198835	5711	3.0413	639	1551	1497	2409	475	1152	1112	1790	437	1059	1023	1645	
	5	4.91	244	206310	5279	2.5311	625	1515	1462	2352	464	1125	1087	1748	427	1034	999	1607	
	5.6	5.53	217	200330	4553	2.1168	606	1469	1419	2282	450	1092	1054	1696	414	1004	969	1559	
	6.3	6.25	192	207805	4178	1.2116	583	1414	1365	2196	433	1051	1014	1632	398	966	932	1500	
	7.1	7.10	169	200330	3544	0.9382	558	1353	1307	2102	415	1005	971	1562	381	924	892	1435	
	8	7.74	155	209300	3399	0.7904	561	1361	1314	2114	417	1011	976	1571	383	930	898	1444	
	9	8.72	138	201825	2909	0.6229	514	1245	1203	1935	382	925	894	1437	351	851	821	1321	
	10	9.93	121	209300	2649	0.4803	437	1049	1013	1630	325	780	753	1211	298	717	692	1113	
	11.2	10.94	110	201825	2319	0.3956	461	1118	1080	1737	343	831	802	1290	315	764	737	1186	
	12.5	12.72	94	210795	2082	1.2186	437	1052	1016	1635	325	782	755	1215	298	719	694	1117	
	14	14.18	85	203320	1801	1.0738	437	971	938	1509	325	722	697	1121	298	663	641	1030	
	16	15.63	77	210795	1695	0.9141	437	960	926	1490	325	713	688	1107	298	655	633	1018	
	18	17.19	70	210795	1541	0.8140	437	904	873	1404	325	672	649	1043	298	617	596	959	
	16	16.12	74	203320	1585	1.2011	340	824	861	1280	253	612	640	951	232	563	588	875	E3H x3
	18	17.96	67	210795	1474	1.1116	318	771	861	1198	236	573	640	890	217	527	588	818	
	20	19.79	61	203320	1291	1.0071	314	761	861	1182	233	566	640	879	214	520	588	808	
	22.4	23.33	51	212290	1144	0.6647	308	746	861	1159	229	554	640	861	210	509	588	791	
	25	26.00	46	203320	983	0.6220	291	700	861	1087	216	520	640	808	199	478	588	743	
	28	28.65	42	212290	931	0.5721	291	694	861	1078	216	516	640	801	199	474	588	736	
	31.5	31.51	38	213486	851	0.5447	291	661	861	1027	216	491	640	763	199	452	588	702	
	35.5	34.75	35	212290	768	0.4571	291	635	861	994	216	472	640	739	199	434	588	679	
	40	38.28	31	204815	672	0.4291	291	630	861	991	216	468	640	736	199	430	588	677	
	45	42.11	28	213486	637	0.4138	291	603	861	991	216	448	640	736	199	412	588	677	
	50	51.87	23	204815	496	0.1928	291	573	861	991	216	425	640	736	199	391	588	677	
	56	57.82	21	212290	461	0.1841	291	542	861	991	216	403	640	736	199	370	588	677	
	63	63.70	19	204815	404	0.1740	291	540	861	991	216	401	640	736	199	369	588	677	
	71	70.07	17	209238	375	0.1685	291	518	861	991	216	385	640	736	199	354	588	677	
	80	80.73	15	204815	319	0.1157	291	485	861	991	216	360	640	736	199	331	588	677	
	90	88.94	13	209238	296	0.1105	291	482	861	991	216	358	640	736	199	329	588	677	
	100	97.84	12	212290	273	0.1077	291	464	861	991	216	345	640	736	199	317	588	677	
	71	73.36	16	209238	358	0.1585	218	479	646	744	162	356	480	552	149	327	441	508	E4H x4
	80	81.78	15	209238	321	0.1542	218	452	646	703	162	336	480	522	149	309	441	480	
	90	90.10	13	204815	286	0.1492	218	447	646	694	162	332	480	515	149	305	441	474	
	100	104.97	11	209238	250	0.0887	218	452	646	701	162	335	480	521	149	308	441	479	
	112	117.01	10	204815	220	0.0866	218	427	646	663	162	317	480	493	149	292	441	453	
	125	128.91	9	209238	204	0.0842	218	422	646	656	162	314	480	487	149	288	441	448	
	140	141.80	8	196749	174	0.0828	218	403	646	626	162	299	480	465	149	275	441	428	
	160	162.51	7	209238	162	0.0617	218	397	646	617	162	295	480	458	149	271	441	421	
	180	179.04	7	204815	144	0.0604	218	393	646	610	162	292	480	453	149	268	441	417	
	200	196.94	6	196749	126	0.0597	218	376	646	584	162	279	480	434	149	257	441	399	
	224	233.26	5	204815	110	0.0286	218	364	646	565	162	270	480	420	149	249	441	386	
	250	260.02	5	205032	99	0.0281	218	346	646	537	162	257	480	399	149	236	441	367	
	280	286.46	4	204815	90	0.0276	218	342	646	532	162	254	480	395	149	234	441	363	
	315	315.10	4	209238	83	0.0274	218	329	646	511	162	245	480	380	149	225	441	349	
	355	357.52	3	204815	72	0.0170	218	316	646	480	162	230	480	357	149	211	441	328	
	400	393.88	3	200869	64	0.0167	218	316	646	475	162	227	480	353	149	209	441	325	
	450	433.27	3	209238	61	0.0165	218	316	646	459	162	219	480	341	149	202	441	313	

E2H / E3H / E4H ...50 SPLIT HOUSING 60 Hz 213 kNm

n_1 = 1800 rpm

i_N	i_{eff}	n_2 [rpm]	T_{2N} [Nm]	P_N [kW]	J [Kgm²]	R1 P_{t0} [kW]	R1	R1 H_2O	R1 +H_2O	S5 P_{t0} [kW]	S5	S5 H_2O	S5 +H_2O	T6 P_{t0} [kW]	T6	T6 H_2O	T6 +H_2O	Type
4	3.91	461	185500	8951	3.6703	577	1807	1350	2581	428	1343	1003	1918	394	1234	922	1763	
4.5	4.38	411	198835	8566	3.0413	580	1819	1359	2598	431	1352	1010	1930	396	1243	928	1774	
5	4.91	367	206310	7919	2.5311	575	1804	1347	2575	427	1340	1001	1914	393	1232	920	1759	
5.6	5.53	326	200330	6829	2.1168	565	1771	1323	2529	420	1316	983	1879	386	1210	904	1727	
6.3	6.25	288	207805	6267	1.2116	549	1722	1286	2459	408	1280	956	1827	375	1176	879	1680	
7.1	7.10	253	200330	5316	0.9382	531	1665	1243	2377	395	1237	924	1766	363	1137	849	1623	
8	7.74	233	209300	5098	0.7904	536	1681	1256	2401	398	1249	933	1784	366	1148	858	1640	E2H (x2)
9	8.72	206	201825	4364	0.6229	495	1552	1159	2216	368	1153	861	1646	338	1060	792	1513	
10	9.93	181	209300	3974	0.4803	437	1315	982	1878	325	977	730	1395	298	898	671	1283	
11.2	10.94	165	201825	3478	0.3956	449	1407	1051	2009	333	1045	781	1493	307	961	718	1372	
12.5	12.72	141	210795	3123	1.2186	437	1334	996	1905	325	991	740	1415	298	911	681	1301	
14	14.18	127	203320	2702	1.0738	437	1233	921	1761	325	916	685	1309	298	842	629	1203	
16	15.63	115	210795	2543	0.9141	437	1224	914	1747	325	909	679	1298	298	836	624	1193	
18	17.19	105	210795	2312	0.8140	437	1154	862	1648	325	858	641	1225	298	788	589	1126	
16	16.12	112	203320	2378	1.2011	330	1035	861	1477	245	769	640	1098	225	707	588	1009	
18	17.96	100	210795	2212	1.1116	309	969	861	1384	230	720	640	1028	211	662	588	945	
20	19.79	91	203320	1936	1.0071	305	956	861	1366	227	711	640	1015	208	653	588	933	
22.4	23.33	77	212290	1715	0.6647	303	949	861	1355	225	705	640	1007	207	648	588	925	
25	26.00	69	203320	1474	0.6220	291	888	861	1268	216	660	640	942	199	606	588	866	
28	28.65	63	212290	1397	0.5721	291	880	861	1256	216	654	640	933	199	601	588	858	
31.5	31.51	57	213486	1277	0.5447	291	836	861	1194	216	622	640	888	199	571	588	816	
35.5	34.75	52	212290	1152	0.4571	291	807	861	1152	216	599	640	856	199	551	588	787	E3H (x3)
40	38.28	47	204815	1008	0.4291	291	799	861	1144	216	594	640	850	199	546	588	781	
45	42.11	43	213486	956	0.4138	291	763	861	1136	216	567	640	844	199	521	588	776	
50	51.87	35	204815	744	0.1928	291	730	861	1136	216	543	640	844	199	499	588	776	
56	57.82	31	212290	692	0.1841	291	690	861	1136	216	513	640	844	199	471	588	776	
63	63.70	28	204815	606	0.1740	291	687	861	1136	216	511	640	844	199	469	588	776	
71	70.07	26	209238	563	0.1685	291	659	861	1136	216	489	640	844	199	450	588	776	
80	80.73	22	204815	478	0.1157	291	617	861	1136	216	458	640	844	199	421	588	776	
90	88.94	20	209238	443	0.1105	291	614	861	1136	216	456	640	844	199	419	588	776	
100	97.84	18	212290	409	0.1077	291	590	861	1136	216	439	640	844	199	403	588	776	
71	73.36	25	209238	538	0.1585	218	587	646	839	162	436	480	623	149	401	441	573	
80	81.78	22	209238	482	0.1542	218	554	646	791	162	412	480	588	149	378	441	540	
90	90.10	20	204815	428	0.1492	218	545	646	778	162	405	480	578	149	372	441	532	
100	104.97	17	209238	376	0.0887	218	560	646	799	162	416	480	594	149	382	441	546	
112	117.01	15	204815	330	0.0866	218	528	646	754	162	392	480	560	149	361	441	515	
125	128.91	14	209238	306	0.0842	218	522	646	746	162	388	480	554	149	357	441	510	
140	141.80	13	196749	262	0.0828	218	497	646	710	162	369	480	527	149	340	441	485	
160	162.51	11	209238	243	0.0617	218	495	646	707	162	368	480	525	149	338	441	483	E4H (x4)
180	179.04	10	204815	216	0.0604	218	489	646	698	162	363	480	519	149	334	441	477	
200	196.94	9	196749	188	0.0597	218	467	646	667	162	347	480	496	149	319	441	456	
224	233.26	8	204815	165	0.0286	218	456	646	652	162	339	480	484	149	312	441	445	
250	260.02	7	205032	149	0.0281	218	433	646	618	162	322	480	459	149	296	441	422	
280	286.46	6	204815	135	0.0276	218	428	646	612	162	318	480	454	149	293	441	418	
315	315.10	6	209238	125	0.0274	218	425	646	588	162	306	480	437	149	281	441	401	
355	357.52	5	204815	108	0.0170	218	425	646	549	162	286	480	408	149	263	441	375	
400	393.88	5	200869	96	0.0167	218	425	646	543	162	283	480	404	149	260	441	371	
450	433.27	4	209238	91	0.0165	218	425	646	538	162	273	480	389	149	251	441	358	

E2H / E3H / E4H ..53 — SPLIT HOUSING — 50 Hz — 255 kNm

	i_N	i_{eff}	n_2 [rpm]	T_{2N} [Nm]	P_N [kW]	J [Kgm²]	R1 P_{t0} [kW]	R1	R1 H_2O	R1 +H_2O	S5 P_{t0} [kW]	S5	S5 H_2O	S5 +H_2O	T6 P_{t0} [kW]	T6	T6 H_2O	T6 +H_2O	Type
n_1 = 1000 rpm	**4.5**	4.69	213	230657	5153	4.8943	825	1721	2012	2909	613	1279	1495	2161	563	1176	1374	1987	E2H (x2)
	5	5.25	190	240909	4805	4.0169	810	1690	1976	2856	602	1256	1468	2122	553	1154	1349	1950	
	5.6	5.89	170	247743	4402	3.3058	786	1641	1918	2773	584	1219	1425	2060	537	1121	1310	1894	
	6.3	6.63	151	249451	3937	2.7279	760	1585	1854	2679	565	1178	1377	1991	519	1083	1266	1830	
	7.1	7.50	133	249451	3483	1.6897	729	1521	1779	2571	542	1130	1322	1910	498	1039	1215	1756	
	8	8.52	117	251160	3086	1.3085	696	1452	1698	2454	517	1079	1262	1823	475	992	1160	1676	
	9	9.29	108	251160	2832	1.1023	700	1460	1707	2467	520	1085	1268	1833	478	997	1166	1685	
	10	10.46	96	251160	2514	0.8687	639	1333	1558	2252	475	990	1158	1673	436	910	1064	1538	
	11.2	11.91	84	251160	2208	0.6699	537	1120	1310	1893	399	832	973	1406	367	765	894	1293	
	12.5	13.13	76	252869	2017	0.5518	573	1195	1397	2019	425	888	1038	1500	391	816	954	1379	
	14	15.27	65	252869	1734	1.3340	538	1121	1311	1895	399	833	974	1408	367	766	896	1294	
	16	17.02	59	252869	1556	1.1667	516	1036	1211	1751	383	770	900	1301	352	707	827	1196	
	18	18.75	53	252869	1412	0.9906	516	1023	1196	1728	383	760	888	1284	352	698	817	1180	
	20	20.63	48	252869	1284	0.8773	516	962	1124	1625	383	714	835	1207	352	657	768	1110	
	20	19.34	52	252869	1369	1.2730	424	884	1082	1494	315	657	804	1110	289	604	739	1020	E3H (x3)
	22.4	21.56	46	252869	1228	1.1695	396	827	1082	1398	295	614	804	1038	271	565	739	955	
	25	23.75	42	252869	1115	1.0548	392	818	1082	1382	291	608	804	1027	268	559	739	944	
	28	27.99	36	254577	952	0.6990	383	798	1082	1349	284	593	804	1002	261	545	739	921	
	31.5	31.20	32	254577	854	0.6496	359	750	1082	1267	267	557	804	942	246	512	739	866	
	35.5	34.38	29	254577	775	0.5949	357	744	1082	1257	265	553	804	934	244	508	739	859	
	40	37.81	26	248888	689	0.5635	344	710	1082	1235	256	528	804	918	235	485	739	844	
	45	41.70	24	253841	637	0.4725	344	679	1082	1235	256	505	804	918	235	464	739	844	
	50	45.94	22	253841	579	0.4419	344	675	1082	1235	256	501	804	918	235	461	739	844	
	56	50.53	20	243984	506	0.4243	344	646	1082	1235	256	480	804	918	235	441	739	844	
	63	62.25	16	253841	427	0.1997	344	611	1082	1235	256	454	804	918	235	417	739	844	
	71	69.39	14	253841	383	0.1897	344	578	1082	1235	256	429	804	918	235	395	739	844	
	80	76.44	13	253841	348	0.1786	344	575	1082	1235	256	428	804	918	235	393	739	844	
	90	84.09	12	239129	298	0.1723	344	553	1082	1235	256	411	804	918	235	378	739	844	
	100	96.88	10	248888	269	0.1185	344	516	1082	1235	256	384	804	918	235	353	739	844	
	112	106.73	9	248888	244	0.1129	344	514	1082	1235	256	382	804	918	235	351	739	844	
	125	117.40	9	239129	213	0.1096	344	499	1082	1235	256	371	804	918	235	341	739	844	
	90	88.04	11	248888	296	0.1620	258	518	812	875	192	385	603	650	176	354	555	598	E4H (x4)
	100	98.14	10	248888	266	0.1570	258	490	812	828	192	364	603	615	176	334	555	565	
	112	108.11	9	248888	241	0.1514	258	484	812	818	192	360	603	608	176	331	555	559	
	125	125.96	8	248888	207	0.0904	258	486	812	822	192	361	603	611	176	332	555	561	
	140	140.41	7	248888	186	0.0880	258	460	812	778	192	342	603	578	176	314	555	531	
	160	154.69	6	248888	168	0.0853	258	455	812	769	192	338	603	572	176	311	555	525	
	180	170.16	6	234322	144	0.0837	258	435	812	735	192	323	603	546	176	297	555	502	
	200	195.01	5	248888	134	0.0624	258	426	812	720	192	317	603	535	176	291	555	492	
	224	214.84	5	248888	121	0.0610	258	422	812	713	192	314	603	530	176	288	555	487	
	250	236.33	4	234322	104	0.0602	258	404	812	682	192	300	603	507	176	276	555	466	
	280	279.91	4	243984	91	0.0289	258	389	812	658	192	289	603	489	176	266	555	449	
	315	312.02	3	243984	82	0.0284	258	373	812	625	192	275	603	465	176	253	555	427	
	355	343.75	3	243984	74	0.0279	258	373	812	619	192	272	603	460	176	250	555	423	
	400	378.13	3	234322	65	0.0276	258	373	812	594	192	261	603	441	176	240	555	406	
	450	429.03	2	243984	60	0.0171	258	373	812	561	192	247	603	417	176	227	555	383	
	500	472.66	2	243984	54	0.0168	258	373	812	557	192	245	603	414	176	225	555	380	
	560	519.92	2	229565	46	0.0166	258	373	812	536	192	235	603	398	176	216	555	366	

E2H / E3H / E4H ...53 SPLIT HOUSING 50 Hz 255 kNm

n_1 = 1500 rpm

i_N	i_{eff}	n_2 [rpm]	T_{2N} [Nm]	P_N [kW]	J [Kgm²]	R1 P_{t0} [kW]	R1	R1 H_2O	R1 $+H_2O$	S5 P_{t0} [kW]	S5	S5 H_2O	S5 $+H_2O$	T6 P_{t0} [kW]	T6	T6 H_2O	T6 $+H_2O$	Type
4.5	4.69	320	230657	7729	4.8943	751	2239	1832	3320	558	1663	1361	2467	513	1529	1251	2267	E2H (x2)
5	5.25	286	240909	7207	4.0169	750	2236	1830	3316	557	1661	1360	2464	512	1527	1250	2265	
5.6	5.89	255	247743	6603	3.3058	737	2196	1797	3256	547	1632	1335	2420	503	1500	1228	2224	
6.3	6.63	226	249451	5906	2.7279	718	2140	1752	3174	534	1590	1302	2358	490	1462	1196	2168	
7.1	7.50	200	249451	5224	1.6897	694	2069	1694	3069	516	1538	1258	2280	474	1413	1157	2096	
8	8.52	176	251160	4629	1.3085	667	1988	1627	2949	496	1477	1209	2191	456	1358	1111	2014	
9	9.29	162	251160	4248	1.1023	673	2006	1642	2975	500	1491	1220	2210	460	1370	1121	2032	
10	10.46	143	251160	3771	0.8687	618	1842	1508	2732	459	1369	1120	2030	422	1258	1030	1866	
11.2	11.91	126	251160	3312	0.6699	521	1554	1272	2304	387	1154	945	1712	356	1061	869	1574	
12.5	13.13	114	252869	3026	0.5518	559	1667	1365	2472	416	1239	1014	1837	382	1139	932	1689	
14	15.27	98	252869	2601	1.3340	528	1573	1288	2333	392	1169	957	1733	361	1074	879	1593	
16	17.02	88	252869	2334	1.1667	516	1456	1191	2159	383	1081	885	1604	352	994	814	1474	
18	18.75	80	252869	2118	0.9906	516	1441	1179	2137	383	1071	876	1588	352	984	805	1459	
20	20.63	73	252869	1926	0.8773	516	1355	1109	2010	383	1007	824	1493	352	926	758	1373	
20	19.34	78	252869	2054	1.2730	412	1228	1082	1821	306	913	804	1353	281	839	739	1244	E3H (x3)
22.4	21.56	70	252869	1842	1.1695	385	1149	1082	1703	286	853	804	1266	263	784	739	1163	
25	23.75	63	252869	1672	1.0548	381	1136	1082	1685	283	844	804	1252	260	776	739	1151	
28	27.99	54	254577	1429	0.6990	375	1118	1082	1658	279	831	804	1232	256	763	739	1132	
31.5	31.20	48	254577	1282	0.6496	352	1048	1082	1554	261	779	804	1155	240	716	739	1061	
35.5	34.38	44	254577	1163	0.5949	348	1038	1082	1540	259	772	804	1144	238	709	739	1052	
40	37.81	40	248888	1034	0.5635	344	988	1082	1466	256	734	804	1089	235	675	739	1001	
45	41.70	36	253841	956	0.4725	344	950	1082	1416	256	706	804	1052	235	649	739	967	
50	45.94	33	253841	868	0.4419	344	943	1082	1410	256	701	804	1047	235	644	739	963	
56	50.53	30	243984	758	0.4243	344	901	1082	1407	256	669	804	1045	235	615	739	961	
63	62.25	24	253841	641	0.1997	344	858	1082	1407	256	638	804	1045	235	586	739	961	
71	69.39	22	253841	575	0.1897	344	812	1082	1407	256	603	804	1045	235	554	739	961	
80	76.44	20	253841	522	0.1786	344	808	1082	1407	256	601	804	1045	235	552	739	961	
90	84.09	18	239129	447	0.1723	344	776	1082	1407	256	577	804	1045	235	530	739	961	
100	96.88	15	248888	404	0.1185	344	724	1082	1407	256	538	804	1045	235	494	739	961	
112	106.73	14	248888	366	0.1129	344	722	1082	1407	256	536	804	1045	235	493	739	961	
125	117.40	13	239129	320	0.1096	344	694	1082	1407	256	515	804	1045	235	474	739	961	
90	88.04	17	248888	444	0.1620	258	703	812	1043	192	522	603	775	176	480	555	712	E4H (x4)
100	98.14	15	248888	398	0.1570	258	664	812	984	192	493	603	731	176	453	555	672	
112	108.11	14	248888	362	0.1514	258	656	812	972	192	487	603	722	176	448	555	664	
125	125.96	12	248888	310	0.0904	258	666	812	988	192	495	603	734	176	455	555	675	
140	140.41	11	248888	278	0.0880	258	630	812	934	192	468	603	694	176	430	555	638	
160	154.69	10	248888	253	0.0853	258	623	812	923	192	463	603	686	176	425	555	631	
180	170.16	9	234322	216	0.0837	258	594	812	880	192	441	603	654	176	405	555	601	
200	195.01	8	248888	200	0.0624	258	587	812	871	192	436	603	647	176	401	555	595	
224	214.84	7	248888	182	0.0610	258	582	812	863	192	432	603	641	176	397	555	589	
250	236.33	6	234322	156	0.0602	258	555	812	823	192	413	603	612	176	379	555	562	
280	279.91	5	243984	137	0.0289	258	539	812	799	192	400	603	594	176	368	555	546	
315	312.02	5	243984	123	0.0284	258	511	812	758	192	380	603	563	176	349	555	518	
355	343.75	4	243984	111	0.0279	258	506	812	750	192	376	603	557	176	345	555	512	
400	378.13	4	234322	97	0.0276	258	502	812	719	192	360	603	534	176	331	555	491	
450	429.03	3	243984	89	0.0171	258	502	812	675	192	338	603	501	176	311	555	461	
500	472.66	3	243984	81	0.0168	258	502	812	669	192	335	603	497	176	308	555	457	
560	519.92	3	229565	69	0.0166	258	502	812	642	192	322	603	477	176	296	555	438	

E2H / E3H / E4H ..53 — SPLIT HOUSING — 60 Hz — 255 kNm

	i_N	i_{eff}	n_2 [rpm]	T_{2N} [Nm]	P_N [kW]	J [Kgm²]	R1 P_{t0} [kW]	R1	R1 H_2O	R1 $+H_2O$	S5 P_{t0} [kW]	S5	S5 H_2O	S5 $+H_2O$	T6 P_{t0} [kW]	T6	T6 H_2O	T6 $+H_2O$	Type
n_1 = 1200 rpm	**4.5**	4.69	256	230657	6183	4.8943	794	1942	1938	3085	590	1443	1440	2292	543	1326	1324	2107	E2H x2
	5	5.25	229	240909	5766	4.0169	785	1919	1915	3049	583	1426	1423	2266	536	1311	1308	2083	
	5.6	5.89	204	247743	5283	3.3058	766	1871	1868	2973	569	1390	1388	2209	523	1278	1276	2031	
	6.3	6.63	181	249451	4724	2.7279	742	1814	1811	2883	552	1348	1345	2142	507	1239	1237	1969	
	7.1	7.50	160	249451	4179	1.6897	714	1746	1743	2774	531	1297	1295	2061	488	1193	1190	1895	
	8	8.52	141	251160	3703	1.3085	684	1671	1668	2655	508	1242	1239	1973	467	1141	1139	1814	
	9	9.29	129	251160	3399	1.1023	689	1683	1680	2674	512	1251	1248	1987	470	1150	1147	1827	
	10	10.46	115	251160	3017	0.8687	630	1540	1537	2447	468	1144	1142	1818	430	1052	1050	1672	
	11.2	11.91	101	251160	2649	0.6699	530	1296	1294	2059	394	963	961	1530	362	885	884	1407	
	12.5	13.13	91	252869	2421	0.5518	567	1387	1384	2203	422	1030	1028	1637	387	947	945	1505	
	14	15.27	79	252869	2081	1.3340	534	1304	1302	2072	397	969	967	1540	365	891	889	1415	
	16	17.02	71	252869	1867	1.1667	516	1205	1203	1915	383	895	894	1423	352	823	822	1308	
	18	18.75	64	252869	1695	0.9906	516	1191	1189	1892	383	885	883	1406	352	813	812	1292	
	20	20.63	58	252869	1541	0.8773	516	1120	1117	1779	383	832	830	1322	352	765	763	1215	
	20	19.34	62	252869	1643	1.2730	419	1023	1082	1625	311	760	804	1208	286	699	739	1110	E3H x3
	22.4	21.56	56	252869	1474	1.1695	391	957	1082	1520	291	711	804	1129	267	653	739	1038	
	25	23.75	51	252869	1338	1.0548	387	946	1082	1503	288	703	804	1117	264	646	739	1027	
	28	27.99	43	254577	1143	0.6990	379	926	1082	1471	282	688	804	1093	259	632	739	1005	
	31.5	31.20	38	254577	1025	0.6496	356	869	1082	1381	264	646	804	1026	243	594	739	943	
	35.5	34.38	35	254577	931	0.5949	353	862	1082	1369	262	640	804	1017	241	589	739	935	
	40	37.81	32	248888	827	0.5635	344	821	1082	1305	256	610	804	970	235	561	739	891	
	45	41.70	29	253841	765	0.4725	344	788	1082	1251	256	585	804	930	235	538	739	855	
	50	45.94	26	253841	694	0.4419	344	782	1082	1245	256	581	804	925	235	534	739	850	
	56	50.53	24	243984	607	0.4243	344	748	1082	1235	256	556	804	918	235	511	739	844	
	63	62.25	19	253841	512	0.1997	344	709	1082	1235	256	527	804	918	235	485	739	844	
	71	69.39	17	253841	460	0.1897	344	671	1082	1235	256	499	804	918	235	458	739	844	
	80	76.44	16	253841	417	0.1786	344	669	1082	1235	256	497	804	918	235	457	739	844	
	90	84.09	14	239129	357	0.1723	344	643	1082	1235	256	477	804	918	235	439	739	844	
	100	96.88	12	248888	323	0.1185	344	599	1082	1235	256	445	804	918	235	409	739	844	
	112	106.73	11	248888	293	0.1129	344	597	1082	1235	256	443	804	918	235	408	739	844	
	125	117.40	10	239129	256	0.1096	344	574	1082	1235	256	427	804	918	235	392	739	844	
	90	88.04	14	248888	355	0.1620	258	593	812	942	192	441	603	700	176	405	555	644	E4H x4
	100	98.14	12	248888	319	0.1570	258	560	812	890	192	416	603	662	176	383	555	608	
	112	108.11	11	248888	289	0.1514	258	554	812	880	192	412	603	654	176	378	555	601	
	125	125.96	10	248888	248	0.0904	258	559	812	888	192	415	603	660	176	382	555	607	
	140	140.41	9	248888	223	0.0880	258	529	812	840	192	393	603	624	176	361	555	574	
	160	154.69	8	248888	202	0.0853	258	523	812	831	192	389	603	618	176	357	555	568	
	180	170.16	7	234322	173	0.0837	258	499	812	794	192	371	603	590	176	341	555	542	
	200	195.01	6	248888	160	0.0624	258	491	812	781	192	365	603	580	176	336	555	533	
	224	214.84	6	248888	146	0.0610	258	487	812	773	192	362	603	575	176	332	555	528	
	250	236.33	5	234322	125	0.0602	258	465	812	739	192	346	603	549	176	318	555	505	
	280	279.91	4	243984	110	0.0289	258	449	812	714	192	334	603	531	176	307	555	488	
	315	312.02	4	243984	98	0.0284	258	427	812	678	192	317	603	504	176	291	555	463	
	355	343.75	3	243984	89	0.0279	258	422	812	671	192	314	603	498	176	288	555	458	
	400	378.13	3	234322	78	0.0276	258	405	812	644	192	301	603	478	176	277	555	440	
	450	429.03	3	243984	71	0.0171	258	381	812	606	192	283	603	450	176	260	555	414	
	500	472.66	3	243984	65	0.0168	258	378	812	601	192	281	603	446	176	258	555	410	
	560	519.92	2	229565	55	0.0166	258	373	812	577	192	270	603	429	176	248	555	394	

E2H / E3H / E4H ...53 SPLIT HOUSING 60 Hz 255 kNm

n_1 = 1800 rpm

i_N	i_{eff}	n_2 [rpm]	T_{2N} [Nm]	P_N [kW]	J [Kgm²]	R1 P_{t0} [kW]	R1	R1 H_2O	R1 $+H_2O$	S5 P_{t0} [kW]	S5	S5 H_2O	S5 $+H_2O$	T6 P_{t0} [kW]	T6	T6 H_2O	T6 $+H_2O$	Type
4.5	4.69	256	230657	6183	4.8943	794	1942	1938	3085	590	1443	1440	2292	543	1326	1324	2107	
5	5.25	229	240909	5766	4.0169	785	1919	1915	3049	583	1426	1423	2266	536	1311	1308	2083	
5.6	5.89	204	247743	5283	3.3058	766	1871	1868	2973	569	1390	1388	2209	523	1278	1276	2031	
6.3	6.63	181	249451	4724	2.7279	742	1814	1811	2883	552	1348	1345	2142	507	1239	1237	1969	
7.1	7.50	160	249451	4179	1.6897	714	1746	1743	2774	531	1297	1295	2061	488	1193	1190	1895	
8	8.52	141	251160	3703	1.3085	684	1671	1668	2655	508	1242	1239	1973	467	1141	1139	1814	
9	9.29	129	251160	3399	1.1023	689	1683	1680	2674	512	1251	1248	1987	470	1150	1147	1827	**E2H** (x2)
10	10.46	115	251160	3017	0.8687	630	1540	1537	2447	468	1144	1142	1818	430	1052	1050	1672	
11.2	11.91	101	251160	2649	0.6699	530	1296	1294	2059	394	963	961	1530	362	885	884	1407	
12.5	13.13	91	252869	2421	0.5518	567	1387	1384	2203	422	1030	1028	1637	387	947	945	1505	
14	15.27	79	252869	2081	1.3340	534	1304	1302	2072	397	969	967	1540	365	891	889	1415	
16	17.02	71	252869	1867	1.1667	516	1205	1203	1915	383	895	894	1423	352	823	822	1308	
18	18.75	64	252869	1695	0.9906	516	1191	1189	1892	383	885	883	1406	352	813	812	1292	
20	20.63	58	252869	1541	0.8773	516	1120	1117	1779	383	832	830	1322	352	765	763	1215	
20	19.34	62	252869	1643	1.2730	419	1023	1082	1625	311	760	804	1208	286	699	739	1110	
22.4	21.56	56	252869	1474	1.1695	391	957	1082	1520	291	711	804	1129	267	653	739	1038	
25	23.75	51	252869	1338	1.0548	387	946	1082	1503	288	703	804	1117	264	646	739	1027	
28	27.99	43	254577	1143	0.6990	379	926	1082	1471	282	688	804	1093	259	632	739	1005	
31.5	31.20	38	254577	1025	0.6496	356	869	1082	1381	264	646	804	1026	243	594	739	943	
35.5	34.38	35	254577	931	0.5949	353	862	1082	1369	262	640	804	1017	241	589	739	935	
40	37.81	32	248888	827	0.5635	344	821	1082	1305	256	610	804	970	235	561	739	891	
45	41.70	29	253841	765	0.4725	344	788	1082	1251	256	585	804	930	235	538	739	855	**E3H** (x3)
50	45.94	26	253841	694	0.4419	344	782	1082	1245	256	581	804	925	235	534	739	850	
56	50.53	24	243984	607	0.4243	344	748	1082	1235	256	556	804	918	235	511	739	844	
63	62.25	19	253841	512	0.1997	344	709	1082	1235	256	527	804	918	235	485	739	844	
71	69.39	17	253841	460	0.1897	344	671	1082	1235	256	499	804	918	235	458	739	844	
80	76.44	16	253841	417	0.1786	344	669	1082	1235	256	497	804	918	235	457	739	844	
90	84.09	14	239129	357	0.1723	344	643	1082	1235	256	477	804	918	235	439	739	844	
100	96.88	12	248888	323	0.1185	344	599	1082	1235	256	445	804	918	235	409	739	844	
112	106.73	11	248888	293	0.1129	344	597	1082	1235	256	443	804	918	235	408	739	844	
125	117.40	10	239129	256	0.1096	344	574	1082	1235	256	427	804	918	235	392	739	844	
90	88.04	14	248888	355	0.1620	258	593	812	942	192	441	603	700	176	405	555	644	
100	98.14	12	248888	319	0.1570	258	560	812	890	192	416	603	662	176	383	555	608	
112	108.11	11	248888	289	0.1514	258	554	812	880	192	412	603	654	176	378	555	601	
125	125.96	10	248888	248	0.0904	258	559	812	888	192	415	603	660	176	382	555	607	
140	140.41	9	248888	223	0.0880	258	529	812	840	192	393	603	624	176	361	555	574	
160	154.69	8	248888	202	0.0853	258	523	812	831	192	389	603	618	176	357	555	568	
180	170.16	7	234322	173	0.0837	258	499	812	794	192	371	603	590	176	341	555	542	
200	195.01	6	248888	160	0.0624	258	491	812	781	192	365	603	580	176	336	555	533	**E4H** (x4)
224	214.84	6	248888	146	0.0610	258	487	812	773	192	362	603	575	176	332	555	528	
250	236.33	5	234322	125	0.0602	258	465	812	739	192	346	603	549	176	318	555	505	
280	279.91	4	243984	110	0.0289	258	449	812	714	192	334	603	531	176	307	555	488	
315	312.02	4	243984	98	0.0284	258	427	812	678	192	317	603	504	176	291	555	463	
355	343.75	3	243984	89	0.0279	258	422	812	671	192	314	603	498	176	288	555	458	
400	378.13	3	234322	78	0.0276	258	405	812	644	192	301	603	478	176	277	555	440	
450	429.03	3	243984	71	0.0171	258	381	812	606	192	283	603	450	176	260	555	414	
500	472.66	3	243984	65	0.0168	258	378	812	601	192	281	603	446	176	258	555	410	
560	519.92	2	229565	55	0.0166	258	373	812	577	192	270	603	429	176	248	555	394	

E2H / E3H / E4H ..56 — SPLIT HOUSING — 50 Hz — 310 kNm

n_1 = 1000 rpm

i_N	i_{eff}	n_2 [rpm]	T_{2N} [Nm]	P_N [kW]	J [Kgm²]	R1 P_{t0} [kW]	R1	R1 H_2O	R1 +H_2O	S5 P_{t0} [kW]	S5	S5 H_2O	S5 +H_2O	T6 P_{t0} [kW]	T6	T6 H_2O	T6 +H_2O	Type
5.6	5.70	175	280775	5155	6.8181	1049	2205	2265	3421	779	1638	1683	2542	716	1506	1547	2337	E2H x2
6.3	6.39	157	293162	4806	5.5507	1025	2156	2215	3346	762	1602	1646	2486	700	1473	1513	2285	
7.1	7.17	139	301420	4402	4.5232	995	2093	2150	3248	740	1555	1597	2413	680	1430	1468	2218	
8	8.07	124	301420	3910	3.6881	962	2023	2078	3140	715	1503	1544	2333	657	1382	1420	2144	
9	9.13	110	303485	3483	2.4412	924	1943	1996	3015	687	1444	1483	2240	631	1327	1363	2059	
10	10.37	96	303485	3065	1.8906	883	1856	1906	2880	656	1379	1416	2140	603	1268	1302	1967	
11.2	11.30	89	303485	2813	1.5926	889	1870	1920	2901	661	1389	1427	2155	607	1277	1312	1981	
12.5	12.73	79	305550	2514	1.2550	811	1705	1751	2646	603	1267	1301	1966	554	1165	1196	1807	
14	14.49	69	305550	2208	0.9678	680	1430	1469	2219	505	1063	1092	1649	465	977	1003	1516	
16	15.97	63	305550	2004	0.7971	728	1530	1572	2374	541	1137	1168	1764	497	1045	1074	1622	
18	18.58	54	305550	1722	1.5153	684	1438	1477	2231	508	1068	1097	1657	467	982	1009	1523	
20	20.71	48	307614	1556	1.3126	633	1327	1363	2059	470	986	1013	1530	432	906	931	1406	
22.4	22.81	44	278711	1279	1.1108	630	1312	1348	2036	468	975	1001	1513	430	896	921	1391	
25	25.09	40	296333	1237	1.1108	630	1237	1271	1920	468	919	944	1426	430	845	868	1311	
22.4	23.53	42	307614	1369	1.3860	540	1135	1167	1761	401	843	867	1309	369	775	797	1203	E3H x3
25	26.23	38	307614	1228	1.2605	505	1062	1158	1648	375	789	860	1225	345	726	791	1126	
28	28.90	35	307614	1115	1.1297	500	1052	1158	1633	372	782	860	1213	342	719	791	1115	
31.5	34.06	29	307614	946	0.7530	486	1021	1158	1585	361	759	860	1177	332	698	791	1082	
35.5	37.96	26	307614	848	0.6930	456	960	1158	1489	339	713	860	1106	312	655	791	1017	
40	41.82	24	307614	770	0.6307	453	953	1158	1479	337	708	860	1099	310	651	791	1010	
45	46.01	22	300740	685	0.5931	433	910	1158	1412	322	676	860	1049	296	621	791	964	
50	50.73	20	307614	635	0.4969	420	867	1158	1353	312	644	860	1006	287	592	791	924	
56	55.89	18	309679	580	0.4619	420	861	1158	1348	312	640	860	1001	287	588	791	920	
63	61.48	16	294814	502	0.4409	420	827	1158	1345	312	615	860	999	287	565	791	919	
71	75.73	13	309679	428	0.2106	420	778	1158	1345	312	578	860	999	287	531	791	919	
80	84.42	12	309679	384	0.1985	420	736	1158	1345	312	547	860	999	287	503	791	919	
90	93.00	11	306724	345	0.1859	420	734	1158	1345	312	546	860	999	287	502	791	919	
100	102.31	10	294814	302	0.1783	420	705	1158	1345	312	524	860	999	287	482	791	919	
112	117.87	8	306724	272	0.1231	420	657	1158	1345	312	488	860	999	287	449	791	919	
125	129.86	8	306724	247	0.1166	420	654	1158	1345	312	486	860	999	287	447	791	919	
140	142.84	7	288947	212	0.1127	420	629	1158	1345	312	468	860	999	287	430	791	919	
100	107.11	9	309679	303	0.1674	317	667	869	1035	236	496	646	769	217	456	594	707	E4H x4
112	119.40	8	306724	269	0.1614	315	631	869	979	234	469	646	728	215	431	594	669	
125	131.54	8	306724	244	0.1551	315	625	869	970	234	464	646	721	215	427	594	662	
140	153.25	7	309679	212	0.0931	315	622	869	965	234	462	646	717	215	425	594	659	
160	170.83	6	306724	188	0.0901	315	589	869	913	234	437	646	679	215	402	594	624	
180	188.20	5	300740	167	0.0871	315	583	869	905	234	433	646	672	215	398	594	618	
200	207.02	5	288947	146	0.0852	315	558	869	866	234	415	646	643	215	381	594	591	
224	237.26	4	300740	133	0.0635	315	543	869	842	234	403	646	626	215	371	594	575	
250	261.39	4	300740	120	0.0619	315	538	869	834	234	400	646	620	215	367	594	570	
280	287.53	3	283139	103	0.0609	315	515	869	799	234	383	646	594	215	352	594	546	
315	340.56	3	306724	94	0.0295	315	495	869	767	234	367	646	570	215	338	594	524	
355	379.62	3	300740	83	0.0289	315	470	869	729	234	349	646	542	215	321	594	498	
400	418.23	2	294814	74	0.0282	315	466	869	722	234	346	646	537	215	318	594	493	
450	460.05	2	283139	64	0.0279	315	456	869	693	234	332	646	515	215	305	594	473	
500	521.98	2	300740	60	0.0173	315	456	869	653	234	313	646	485	215	287	594	446	
560	575.07	2	294814	54	0.0170	315	456	869	648	234	310	646	481	215	285	594	442	
630	632.57	2	283139	47	0.0168	315	456	869	628	234	299	646	464	215	275	594	426	

E2H / E3H / E4H ...56 — SPLIT HOUSING — 50 Hz — 310 kNm

n_1 = 1500 rpm

i_N	i_{eff}	n_2 [rpm]	T_{2N} [Nm]	P_N [kW]	J [Kgm²]	R1 P_{t0} [kW]	R1	R1 H_2O	R1 $+H_2O$	S5 P_{t0} [kW]	S5	S5 H_2O	S5 $+H_2O$	T6 P_{t0} [kW]	T6	T6 H_2O	T6 $+H_2O$	Type
5.6	5.70	263	280775	7733	6.8181	966	2902	2087	4023	718	2156	1550	2989	660	1982	1425	2747	E2H (x2)
6.3	6.39	235	293162	7209	5.5507	957	2876	2068	3987	711	2137	1536	2962	654	1964	1412	2723	
7.1	7.17	209	301420	6603	4.5232	939	2820	2028	3909	698	2095	1506	2904	641	1926	1385	2670	
8	8.07	186	301420	5865	3.6881	914	2746	1975	3807	679	2040	1467	2828	624	1876	1349	2600	
9	9.13	164	303485	5224	2.4412	883	2654	1908	3679	656	1972	1418	2733	603	1813	1303	2512	
10	10.37	145	303485	4597	1.8906	849	2550	1833	3534	631	1894	1362	2626	580	1742	1252	2414	
11.2	11.30	133	303485	4219	1.5926	858	2577	1853	3572	637	1915	1377	2654	586	1760	1266	2440	
12.5	12.73	118	305550	3771	1.2550	787	2364	1700	3277	585	1756	1263	2434	537	1615	1161	2238	
14	14.49	104	305550	3311	0.9678	662	1989	1430	2757	492	1478	1063	2049	452	1359	977	1883	
16	15.97	94	305550	3005	0.7971	713	2142	1540	2969	530	1591	1144	2206	487	1463	1052	2028	
18	18.58	81	305550	2584	1.5153	674	2024	1455	2805	501	1504	1081	2084	460	1382	994	1916	
20	20.71	72	307614	2333	1.3126	630	1873	1346	2596	468	1391	1000	1929	430	1279	920	1773	
22.4	22.81	66	278711	1919	1.1108	630	1856	1334	2572	468	1379	991	1911	430	1267	911	1757	
25	25.09	60	296333	1855	1.1108	630	1751	1259	2427	468	1301	936	1804	430	1196	860	1658	
22.4	23.53	64	307614	2053	1.3860	529	1589	1158	2202	393	1181	860	1636	361	1085	791	1504	E3H (x3)
25	26.23	57	307614	1842	1.2605	495	1487	1158	2062	368	1105	860	1532	338	1016	791	1408	
28	28.90	52	307614	1672	1.1297	491	1475	1158	2045	365	1096	860	1519	335	1007	791	1396	
31.5	34.06	44	307614	1419	0.7530	478	1435	1158	1989	355	1066	860	1478	326	980	791	1359	
35.5	37.96	40	307614	1273	0.6930	448	1346	1158	1866	333	1000	860	1386	306	919	791	1274	
40	41.82	36	307614	1155	0.6307	445	1336	1158	1852	330	993	860	1376	304	913	791	1265	
45	46.01	33	300740	1027	0.5931	424	1273	1158	1764	315	945	860	1311	289	869	791	1205	
50	50.73	30	307614	952	0.4969	420	1216	1158	1686	312	904	860	1253	287	831	791	1151	
56	55.89	27	309679	870	0.4619	420	1207	1158	1673	312	897	860	1243	287	824	791	1143	
63	61.48	24	294814	753	0.4409	420	1157	1158	1604	312	860	860	1192	287	790	791	1096	
71	75.73	20	309679	642	0.2106	420	1096	1158	1555	312	814	860	1155	287	748	791	1062	
80	84.42	18	309679	576	0.1985	420	1036	1158	1555	312	770	860	1155	287	708	791	1062	
90	93.00	16	306724	518	0.1859	420	1034	1158	1555	312	768	860	1155	287	706	791	1062	
100	102.31	15	294814	453	0.1783	420	992	1158	1555	312	737	860	1155	287	678	791	1062	
112	117.87	13	306724	409	0.1231	420	923	1158	1555	312	686	860	1155	287	631	791	1062	
125	129.86	12	306724	371	0.1166	420	921	1158	1555	312	684	860	1155	287	629	791	1062	
140	142.84	11	288947	318	0.1127	420	885	1158	1555	312	658	860	1155	287	605	791	1062	
100	107.11	14	309679	454	0.1674	315	918	869	1272	234	682	646	945	215	627	594	869	E4H (x4)
112	119.40	13	306724	403	0.1614	315	867	869	1202	234	644	646	893	215	592	594	821	
125	131.54	11	306724	366	0.1551	315	859	869	1190	234	638	646	885	215	587	594	813	
140	153.25	10	309679	317	0.0931	315	857	869	1188	234	637	646	883	215	586	594	812	
160	170.83	9	306724	282	0.0901	315	811	869	1124	234	603	646	835	215	554	594	768	
180	188.20	8	300740	251	0.0871	315	803	869	1113	234	597	646	827	215	548	594	760	
200	207.02	7	288947	219	0.0852	315	768	869	1064	234	570	646	790	215	524	594	727	
224	237.26	6	300740	199	0.0635	315	751	869	1040	234	558	646	773	215	513	594	711	
250	261.39	6	300740	181	0.0619	315	744	869	1031	234	553	646	766	215	508	594	704	
280	287.53	5	283139	155	0.0609	315	711	869	985	234	528	646	732	215	485	594	673	
315	340.56	4	306724	141	0.0295	315	685	869	950	234	509	646	706	215	468	594	649	
355	379.62	4	300740	124	0.0289	315	650	869	901	234	483	646	670	215	444	594	616	
400	418.23	4	294814	111	0.0282	315	644	869	892	234	478	646	663	215	440	594	609	
450	460.05	3	283139	97	0.0279	315	616	869	854	234	458	646	635	215	421	594	584	
500	521.98	3	300740	90	0.0173	315	613	869	800	234	429	646	594	215	394	594	546	
560	575.07	3	294814	81	0.0170	315	613	869	792	234	425	646	589	215	390	594	541	
630	632.57	2	283139	70	0.0168	315	613	869	775	234	408	646	566	215	375	594	520	

E2H / E3H / E4H ..56 — SPLIT HOUSING — 60 Hz — 310 kNm

	i_N	i_{eff}	n_2 [rpm]	T_{2N} [Nm]	P_N [kW]	J [Kgm²]	R1 P_{t0} [kW]	R1	R1 H_2O	R1 +H_2O	S5 P_{t0} [kW]	S5	S5 H_2O	S5 +H_2O	T6 P_{t0} [kW]	T6	T6 H_2O	T6 +H_2O	Type
n_1 = 1200 rpm	**5.6**	5.70	210	280775	6186	6.8181	1014	2499	2191	3675	754	1857	1628	2731	693	1707	1496	2510	E2H x2
	6.3	6.39	188	293162	5767	5.5507	997	2455	2153	3611	741	1824	1600	2683	681	1677	1470	2467	
	7.1	7.17	167	301420	5283	4.5232	971	2392	2097	3518	722	1777	1558	2614	663	1634	1432	2403	
	8	8.07	149	301420	4692	3.6881	941	2319	2033	3410	699	1723	1511	2534	643	1584	1389	2329	
	9	9.13	132	303485	4179	2.4412	906	2232	1957	3283	673	1658	1454	2439	619	1524	1337	2242	
	10	10.37	116	303485	3678	1.8906	868	2137	1874	3144	645	1588	1392	2336	593	1460	1280	2147	
	11.2	11.30	106	303485	3375	1.5926	876	2157	1891	3172	651	1602	1405	2357	598	1473	1292	2167	
	12.5	12.73	94	305550	3017	1.2550	801	1972	1729	2900	595	1465	1285	2155	547	1347	1181	1981	
	14	14.49	83	305550	2649	0.9678	672	1656	1452	2436	500	1230	1079	1810	459	1131	992	1664	
	16	15.97	75	305550	2404	0.7971	722	1778	1559	2614	536	1321	1158	1943	493	1214	1064	1786	
	18	18.58	65	305550	2067	1.5153	680	1674	1468	2462	505	1244	1090	1829	464	1143	1002	1681	
	20	20.71	58	307614	1867	1.3126	631	1546	1356	2274	469	1149	1007	1690	431	1056	926	1553	
	22.4	22.81	53	278711	1535	1.1108	630	1530	1341	2250	468	1137	997	1672	430	1045	916	1537	
	25	25.09	48	296333	1484	1.1108	630	1442	1265	2122	468	1072	940	1576	430	985	864	1449	
	22.4	23.53	51	307614	1643	1.3860	535	1317	1162	1937	397	979	863	1439	365	900	793	1323	E3H x3
	25	26.23	46	307614	1474	1.2605	500	1232	1158	1812	372	916	860	1347	342	842	791	1238	
	28	28.90	42	307614	1338	1.1297	496	1221	1158	1796	368	907	860	1334	339	834	791	1227	
	31.5	34.06	35	307614	1135	0.7530	482	1186	1158	1745	358	881	860	1296	329	810	791	1192	
	35.5	37.96	32	307614	1018	0.6930	452	1113	1158	1638	336	827	860	1217	309	760	791	1118	
	40	41.82	29	307614	924	0.6307	449	1106	1158	1626	333	821	860	1208	307	755	791	1111	
	45	46.01	26	300740	821	0.5931	428	1054	1158	1551	318	783	860	1152	292	720	791	1059	
	50	50.73	24	307614	762	0.4969	420	1006	1158	1480	312	748	860	1100	287	687	791	1011	
	56	55.89	21	309679	696	0.4619	420	999	1158	1469	312	742	860	1092	287	682	791	1004	
	63	61.48	20	294814	603	0.4409	420	959	1158	1411	312	713	860	1048	287	655	791	964	
	71	75.73	16	309679	514	0.2106	420	904	1158	1346	312	672	860	1000	287	618	791	919	
	80	84.42	14	309679	461	0.1985	420	856	1158	1345	312	636	860	999	287	584	791	919	
	90	93.00	13	306724	414	0.1859	420	854	1158	1345	312	635	860	999	287	583	791	919	
	100	102.31	12	294814	362	0.1783	420	820	1158	1345	312	609	860	999	287	560	791	919	
	112	117.87	10	306724	327	0.1231	420	763	1158	1345	312	567	860	999	287	521	791	919	
	125	129.86	9	306724	297	0.1166	420	760	1158	1345	312	565	860	999	287	519	791	919	
	140	142.84	8	288947	254	0.1127	420	731	1158	1345	312	543	860	999	287	499	791	919	
	100	107.11	11	309679	363	0.1674	315	768	869	1129	234	570	646	839	215	524	594	771	E4H x4
	112	119.40	10	306724	323	0.1614	315	726	869	1067	234	539	646	793	215	496	594	729	
	125	131.54	9	306724	293	0.1551	315	719	869	1057	234	534	646	786	215	491	594	722	
	140	153.25	8	309679	254	0.0931	315	717	869	1054	234	533	646	783	215	490	594	720	
	160	170.83	7	306724	226	0.0901	315	678	869	998	234	504	646	741	215	463	594	681	
	180	188.20	6	300740	201	0.0871	315	672	869	988	234	499	646	734	215	459	594	675	
	200	207.02	6	288947	175	0.0852	315	642	869	945	234	477	646	702	215	439	594	645	
	224	237.26	5	300740	159	0.0635	315	627	869	922	234	466	646	685	215	428	594	630	
	250	261.39	5	300740	145	0.0619	315	621	869	913	234	461	646	679	215	424	594	624	
	280	287.53	4	283139	124	0.0609	315	594	869	874	234	441	646	649	215	406	594	597	
	315	340.56	4	306724	113	0.0295	315	571	869	840	234	424	646	624	215	390	594	574	
	355	379.62	3	300740	100	0.0289	315	542	869	797	234	403	646	592	215	370	594	545	
	400	418.23	3	294814	89	0.0282	315	537	869	790	234	399	646	587	215	367	594	539	
	450	460.05	3	283139	77	0.0279	315	515	869	757	234	383	646	563	215	352	594	517	
	500	521.98	2	300740	72	0.0173	315	483	869	711	234	359	646	528	215	330	594	486	
	560	575.07	2	294814	64	0.0170	315	479	869	705	234	356	646	524	215	327	594	482	
	630	632.57	2	283139	56	0.0168	315	461	869	678	234	343	646	504	215	315	594	463	

E2H / E3H / E4H ...56 — SPLIT HOUSING — 60 Hz — 310 kNm

n_1 = 1800 rpm

i_N	i_{eff}	n_2 [rpm]	T_{2N} [Nm]	P_N [kW]	J [Kgm²]	R1 P_{t0} [kW]	R1	R1 H_2O	R1 $+H_2O$	S5 P_{t0} [kW]	S5	S5 H_2O	S5 $+H_2O$	T6 P_{t0} [kW]	T6	T6 H_2O	T6 $+H_2O$	Type
5.6	5.70	316	280775	9279	6.8181	918	2922	1982	3986	682	2171	1473	2962	627	1996	1354	2723	
6.3	6.39	282	293162	8651	5.5507	918	2924	1983	3989	682	2173	1474	2964	627	1997	1355	2725	
7.1	7.17	251	301420	7924	4.5232	907	2889	1959	3941	674	2146	1456	2928	620	1973	1338	2692	
8	8.07	223	301420	7038	3.6881	889	2829	1919	3860	660	2102	1426	2868	607	1932	1311	2636	
9	9.13	197	303485	6269	2.4412	863	2747	1863	3747	641	2041	1384	2784	589	1876	1273	2559	
10	10.37	174	303485	5516	1.8906	832	2649	1797	3614	618	1968	1335	2685	568	1809	1227	2468	
11.2	11.30	159	303485	5063	1.5926	842	2681	1819	3658	626	1992	1351	2718	575	1831	1242	2498	**E2H** (x2)
12.5	12.73	141	305550	4525	1.2550	775	2467	1673	3365	576	1833	1243	2500	529	1685	1143	2299	
14	14.49	124	305550	3974	0.9678	653	2080	1411	2838	485	1545	1048	2108	446	1421	964	1938	
16	15.97	113	305550	3606	0.7971	705	2244	1522	3062	524	1667	1131	2275	481	1533	1040	2091	
18	18.58	97	305550	3100	1.5153	668	2126	1442	2901	496	1580	1072	2155	456	1452	985	1981	
20	20.71	87	307614	2800	1.3126	630	1971	1337	2688	468	1464	993	1998	430	1346	913	1836	
22.4	22.81	79	278711	2303	1.1108	630	1956	1327	2668	468	1453	986	1982	430	1336	906	1822	
25	25.09	72	296333	2226	1.1108	630	1848	1254	2521	468	1373	931	1873	430	1262	856	1722	
22.4	23.53	76	307614	2464	1.3860	524	1668	1158	2275	389	1239	860	1690	358	1139	791	1554	
25	26.23	69	307614	2211	1.2605	491	1563	1158	2132	365	1161	860	1584	335	1067	791	1456	
28	28.90	62	307614	2007	1.1297	487	1552	1158	2117	362	1153	860	1573	333	1060	791	1446	
31.5	34.06	53	307614	1702	0.7530	475	1513	1158	2064	353	1124	860	1533	324	1033	791	1409	
35.5	37.96	47	307614	1527	0.6930	445	1418	1158	1935	331	1054	860	1438	304	969	791	1322	
40	41.82	43	307614	1386	0.6307	442	1408	1158	1921	329	1046	860	1427	302	962	791	1312	
45	46.01	39	300740	1232	0.5931	422	1340	1158	1828	314	996	860	1358	289	915	791	1249	
50	50.73	35	307614	1143	0.4969	420	1282	1158	1748	312	952	860	1299	287	875	791	1194	**E3H** (x3)
56	55.89	32	309679	1044	0.4619	420	1271	1158	1735	312	945	860	1289	287	868	791	1185	
63	61.48	29	294814	904	0.4409	420	1218	1158	1661	312	905	860	1234	287	832	791	1135	
71	75.73	24	309679	771	0.2106	420	1156	1158	1578	312	859	860	1172	287	790	791	1077	
80	84.42	21	309679	691	0.1985	420	1092	1158	1555	312	812	860	1155	287	746	791	1062	
90	93.00	19	306724	622	0.1859	420	1090	1158	1555	312	810	860	1155	287	745	791	1062	
100	102.31	18	294814	543	0.1783	420	1045	1158	1555	312	777	860	1155	287	714	791	1062	
112	117.87	15	306724	490	0.1231	420	974	1158	1555	312	724	860	1155	287	666	791	1062	
125	129.86	14	306724	445	0.1166	420	972	1158	1555	312	722	860	1155	287	664	791	1062	
140	142.84	13	288947	381	0.1127	420	934	1158	1555	312	694	860	1155	287	638	791	1062	
100	107.11	17	309679	545	0.1674	315	958	869	1307	234	712	646	971	215	654	594	893	
112	119.40	15	306724	484	0.1614	315	905	869	1234	234	672	646	917	215	618	594	843	
125	131.54	14	306724	440	0.1551	315	896	869	1222	234	666	646	908	215	612	594	835	
140	153.25	12	309679	381	0.0931	315	895	869	1221	234	665	646	908	215	611	594	834	
160	170.83	11	306724	338	0.0901	315	846	869	1155	234	629	646	858	215	578	594	789	
180	188.20	10	300740	301	0.0871	315	838	869	1143	234	622	646	849	215	572	594	781	
200	207.02	9	288947	263	0.0852	315	800	869	1092	234	595	646	811	215	547	594	746	
224	237.26	8	300740	239	0.0635	315	784	869	1069	234	582	646	794	215	535	594	730	**E4H** (x4)
250	261.39	7	300740	217	0.0619	315	776	869	1059	234	577	646	787	215	530	594	723	
280	287.53	6	283139	186	0.0609	315	741	869	1011	234	551	646	752	215	506	594	691	
315	340.56	5	306724	170	0.0295	315	717	869	979	234	533	646	727	215	490	594	668	
355	379.62	5	300740	149	0.0289	315	680	869	927	234	505	646	689	215	464	594	633	
400	418.23	4	294814	133	0.0282	315	673	869	918	234	500	646	682	215	459	594	627	
450	460.05	4	283139	116	0.0279	315	644	869	878	234	478	646	652	215	440	594	600	
500	521.98	3	300740	109	0.0173	315	613	869	821	234	447	646	610	215	411	594	561	
560	575.07	3	294814	97	0.0170	315	613	869	813	234	443	646	604	215	407	594	555	
630	632.57	3	283139	84	0.0168	315	613	869	781	234	425	646	580	215	391	594	533	

E3B / E4B ..35 — SPLIT HOUSING — 50 Hz — 65 kNm

	i_N	i_{eff}	n_2 [rpm]	T_{2N} [Nm]	P_N [kW]	J [Kgm²]	R1 P_{t0} [kW]	R1	R1 H_2O	R1 +H_2O	S5 P_{t0} [kW]	S5	S5 H_2O	S5 +H_2O	T6 P_{t0} [kW]	T6	T6 H_2O	T6 +H_2O	Type
n_1 = 1000 rpm	**9**	8.73	115	43262	519	0.4865	142	274	315	414	106	204	234	307	97	187	215	282	
	10	9.98	100	49563	520	0.4448	142	274	315	414	106	204	234	307	97	187	215	282	
	11.2	10.69	94	52923	518	0.4301	142	274	315	414	106	204	234	307	97	187	215	282	
	12.5	12.12	82	60063	519	0.3992	142	274	315	414	106	204	234	307	97	187	215	282	
	14	13.91	72	64874	488	0.3704	142	274	315	414	106	204	234	307	97	187	215	282	
	16	15.13	66	64874	449	0.3568	142	274	315	414	106	204	234	307	97	187	215	282	
	18	17.79	56	61185	360	0.3315	146	281	315	424	109	209	234	315	100	192	215	290	
	20	20.00	50	61185	320	0.3212	141	272	315	411	105	202	234	305	97	186	215	281	
	22.4	22.13	45	59979	284	0.3101	139	269	315	405	104	200	234	301	95	184	215	277	**E3B** x3
	25	25.55	39	59979	246	0.1822	133	256	315	386	99	190	234	287	91	175	215	264	
	28	28.72	35	59979	219	0.1771	132	245	315	374	98	182	234	278	90	167	215	255	
	31.5	31.78	31	59979	198	0.1718	132	240	315	374	98	178	234	278	90	164	215	255	
	35.5	35.59	28	59979	176	0.1052	132	212	315	374	98	157	234	278	90	145	215	255	
	40	40.01	25	59979	157	0.1027	132	201	315	374	98	150	234	278	90	138	215	255	
	45	44.27	23	58786	139	0.0999	132	197	315	374	98	146	234	278	90	134	215	255	
	50	51.10	20	59979	123	0.0565	132	191	315	374	98	142	234	278	90	130	215	255	
	56	57.44	17	58786	107	0.0552	132	191	315	374	98	142	234	278	90	130	215	255	
	63	63.56	16	58786	97	0.0539	132	191	315	374	98	142	234	278	90	130	215	255	
	71	71.34	14	56435	83	0.0531	132	191	315	374	98	142	234	278	90	130	215	255	
	80	80.59	12	59000	77	0.0544	93	166	221	250	69	123	164	186	64	113	151	171	
	90	90.60	11	58786	68	0.0539	93	158	221	239	69	118	164	177	64	108	151	163	
	100	100.25	10	59983	63	0.0534	93	156	221	235	69	116	164	174	64	106	151	160	
	112	115.72	9	59000	53	0.0272	93	144	221	218	69	107	164	162	64	99	151	149	
	125	130.09	8	58786	47	0.0270	93	138	221	210	69	103	164	155	64	94	151	142	
	140	143.95	7	59983	44	0.0267	93	136	221	208	69	101	164	152	64	93	151	140	**E4B** x4
	160	161.18	6	59000	38	0.0155	93	123	221	208	69	91	164	138	64	84	151	127	
	180	181.20	6	58786	34	0.0154	93	120	221	208	69	87	164	132	64	80	151	121	
	200	200.50	5	59983	31	0.0153	93	120	221	208	69	86	164	129	64	79	151	119	
	224	231.44	4	59000	27	0.0083	93	120	221	208	69	75	164	115	64	69	151	104	
	250	260.19	4	59492	24	0.0083	93	120	221	208	69	72	164	115	64	67	151	100	
	280	287.90	3	59983	22	0.0082	93	120	221	208	69	71	164	115	64	65	151	98	
	315	323.14	3	61185	20	0.0082	93	120	221	208	69	68	164	115	64	62	151	97	

For tunnel bell housings with an integrated fan, please refer to the calculation method presented on page 25.
Dimensions of motor bell housing are shown in page 272.

E3B / E4B ..35 — SPLIT HOUSING — 50 Hz — 65 kNm

	i_N	i_{eff}	n_2 [rpm]	T_{2N} [Nm]	P_N [kW]	J [Kgm²]	R1 P_{t0} [kW]	R1	R1 H_2O	R1 $+H_2O$	S5 P_{t0} [kW]	S5	S5 H_2O	S5 $+H_2O$	T6 P_{t0} [kW]	T6	T6 H_2O	T6 $+H_2O$	Type
n_1 = 1500 rpm	**9**	8.73	172	43262	778	0.4865	134	369	315	500	100	274	234	371	92	252	215	341	
	10	9.98	150	49563	780	0.4448	134	369	315	500	100	274	234	371	92	252	215	341	
	11.2	10.69	140	52923	777	0.4301	134	369	315	500	100	274	234	371	92	252	215	341	
	12.5	12.12	124	60063	778	0.3992	134	369	315	500	100	274	234	371	92	252	215	341	
	14	13.91	108	64874	732	0.3704	134	369	315	500	100	274	234	371	92	252	215	341	
	16	15.13	99	64874	673	0.3568	134	369	315	500	100	274	234	371	92	252	215	341	
	18	17.79	84	61185	540	0.3315	137	378	315	512	102	281	234	381	94	258	215	350	
	20	20.00	75	61185	480	0.3212	133	367	315	497	99	272	234	369	91	250	215	339	
	22.4	22.13	68	59979	426	0.3101	132	361	315	490	98	268	234	364	90	247	215	334	**E3B** (x3)
	25	25.55	59	59979	369	0.1822	132	350	315	475	98	260	234	353	90	239	215	324	
	28	28.72	52	59979	328	0.1771	132	335	315	454	98	249	234	337	90	229	215	310	
	31.5	31.78	47	59979	296	0.1718	132	327	315	443	98	243	234	329	90	223	215	303	
	35.5	35.59	42	59979	265	0.1052	132	292	315	440	98	217	234	327	90	200	215	301	
	40	40.01	37	59979	235	0.1027	132	277	315	440	98	206	234	327	90	189	215	301	
	45	44.27	34	58786	209	0.0999	132	269	315	440	98	200	234	327	90	184	215	301	
	50	51.10	29	59979	184	0.0565	132	257	315	440	98	191	234	327	90	176	215	301	
	56	57.44	26	58786	161	0.0552	132	257	315	440	98	191	234	327	90	176	215	301	
	63	63.56	24	58786	145	0.0539	132	257	315	440	98	191	234	327	90	176	215	301	
	71	71.34	21	56435	124	0.0531	132	257	315	440	98	191	234	327	90	176	215	301	
	80	80.59	19	59000	115	0.0544	93	228	221	310	69	170	164	230	64	156	151	212	
	90	90.60	17	58786	102	0.0539	93	218	221	295	69	162	164	219	64	149	151	202	
	100	100.25	15	59983	94	0.0534	93	214	221	290	69	159	164	215	64	146	151	198	
	112	115.72	13	59000	80	0.0272	93	200	221	271	69	148	164	201	64	136	151	185	
	125	130.09	12	58786	71	0.0270	93	190	221	258	69	141	164	192	64	130	151	176	
	140	143.95	10	59983	65	0.0267	93	187	221	253	69	139	164	188	64	128	151	173	**E4B** (x4)
	160	161.18	9	59000	57	0.0155	93	170	221	243	69	126	164	171	64	116	151	157	
	180	181.20	8	58786	51	0.0154	93	162	221	243	69	120	164	163	64	111	151	150	
	200	200.50	7	59983	47	0.0153	93	161	221	243	69	118	164	160	64	108	151	147	
	224	231.44	6	59000	40	0.0083	93	161	221	243	69	103	164	140	64	95	151	129	
	250	260.19	6	59492	36	0.0083	93	161	221	243	69	99	164	135	64	91	151	123	
	280	287.90	5	59983	33	0.0082	93	161	221	243	69	97	164	134	64	89	151	120	
	315	323.14	5	61185	30	0.0082	93	161	221	243	69	92	164	134	64	85	151	115	

For tunnel bell housings with an integrated fan, please refer to the calculation method presented on page 25.
Dimensions of motor bell housing are shown in page 272.

E3B / E4B ..35

SPLIT HOUSING

60 Hz

65 kNm

	i_N	i_{eff}	n_2 [rpm]	T_{2N} [Nm]	P_N [kW]	J [Kgm²]	R1 P_{t0} [kW]	R1	R1 H_2O	R1 +H_2O	S5 P_{t0} [kW]	S5	S5 H_2O	S5 +H_2O	T6 P_{t0} [kW]	T6	T6 H_2O	T6 +H_2O	Type
n_1 = 1200 rpm	**9**	8.73	137	43262	623	0.4865	138	313	315	448	103	232	234	333	95	214	215	306	
	10	9.98	120	49563	624	0.4448	138	313	315	448	103	232	234	333	95	214	215	306	
	11.2	10.69	112	52923	622	0.4301	138	313	315	448	103	232	234	333	95	214	215	306	
	12.5	12.12	99	60063	623	0.3992	138	313	315	448	103	232	234	333	95	214	215	306	
	14	13.91	86	64874	586	0.3704	138	313	315	448	103	232	234	333	95	214	215	306	
	16	15.13	79	64874	539	0.3568	138	313	315	448	103	232	234	333	95	214	215	306	
	18	17.79	67	61185	432	0.3315	142	321	315	460	106	238	234	342	97	219	215	314	
	20	20.00	60	61185	384	0.3212	138	311	315	445	102	231	234	331	94	212	215	304	
	22.4	22.13	54	59979	341	0.3101	136	306	315	439	101	228	234	326	93	209	215	300	**E3B** x3
	25	25.55	47	59979	295	0.1822	132	295	315	422	98	219	234	314	90	201	215	288	
	28	28.72	42	59979	262	0.1771	132	282	315	404	98	209	234	300	90	192	215	276	
	31.5	31.78	38	59979	237	0.1718	132	276	315	395	98	205	234	294	90	188	215	270	
	35.5	35.59	34	59979	212	0.1052	132	245	315	374	98	182	234	278	90	167	215	255	
	40	40.01	30	59979	188	0.1027	132	232	315	374	98	173	234	278	90	159	215	255	
	45	44.27	27	58786	167	0.0999	132	226	315	374	98	168	234	278	90	155	215	255	
	50	51.10	23	59979	147	0.0565	132	195	315	374	98	145	234	278	90	133	215	255	
	56	57.44	21	58786	129	0.0552	132	191	315	374	98	142	234	278	90	130	215	255	
	63	63.56	19	58786	116	0.0539	132	191	315	374	98	142	234	278	90	130	215	255	
	71	71.34	17	56435	99	0.0531	132	191	315	374	98	142	234	278	90	130	215	255	
	80	80.59	15	59000	92	0.0544	93	191	221	274	69	142	164	204	64	131	151	187	
	90	90.60	13	58786	82	0.0539	93	182	221	262	69	136	164	194	64	125	151	179	
	100	100.25	12	59983	75	0.0534	93	179	221	257	69	133	164	191	64	122	151	176	
	112	115.72	10	59000	64	0.0272	93	167	221	239	69	124	164	178	64	114	151	163	
	125	130.09	9	58786	57	0.0270	93	159	221	228	69	118	164	170	64	109	151	156	
	140	143.95	8	59983	52	0.0267	93	157	221	224	69	116	164	167	64	107	151	153	**E4B** x4
	160	161.18	7	59000	46	0.0155	93	142	221	208	69	105	164	151	64	97	151	139	
	180	181.20	7	58786	41	0.0154	93	136	221	208	69	101	164	144	64	93	151	133	
	200	200.50	6	59983	38	0.0153	93	133	221	208	69	99	164	142	64	91	151	130	
	224	231.44	5	59000	32	0.0083	93	120	221	208	69	87	164	124	64	80	151	114	
	250	260.19	5	59492	29	0.0083	93	120	221	208	69	83	164	119	64	76	151	109	
	280	287.90	4	59983	26	0.0082	93	120	221	208	69	81	164	117	64	75	151	107	
	315	323.14	4	61185	24	0.0082	93	120	221	208	69	78	164	115	64	71	151	102	

For tunnel bell housings with an integrated fan, please refer to the calculation method presented on page 25.
Dimensions of motor bell housing are shown in page 272.

E3B / E4B ..35 — SPLIT HOUSING — 60 Hz — 65 kNm

	i_N	i_{eff}	n_2 [rpm]	T_{2N} [Nm]	P_N [kW]	J [Kgm²]	R1 P_{t0} [kW]	R1	R1 H_2O	R1 $+H_2O$	S5 P_{t0} [kW]	S5	S5 H_2O	S5 $+H_2O$	T6 P_{t0} [kW]	T6	T6 H_2O	T6 $+H_2O$	Type
n_1 = 1800 rpm	**9**	8.73	206	43262	934	0.4865	132	380	315	508	98	282	234	377	90	260	215	347	
	10	9.98	180	49563	936	0.4448	132	380	315	508	98	282	234	377	90	260	215	347	
	11.2	10.69	168	52923	933	0.4301	132	380	315	508	98	282	234	377	90	260	215	347	
	12.5	12.12	148	60063	934	0.3992	132	380	315	508	98	282	234	377	90	260	215	347	
	14	13.91	129	64874	879	0.3704	132	380	315	508	98	282	234	377	90	260	215	347	
	16	15.13	119	64874	808	0.3568	132	380	315	508	98	282	234	377	90	260	215	347	
	18	17.79	101	61185	648	0.3315	133	390	315	520	99	289	234	387	91	266	215	355	
	20	20.00	90	61185	577	0.3212	132	378	315	505	98	281	234	375	90	258	215	345	
	22.4	22.13	81	59979	511	0.3101	132	373	315	498	98	277	234	370	90	255	215	340	**E3B**
	25	25.55	70	59979	442	0.1822	132	363	315	485	98	270	234	360	90	248	215	331	
	28	28.72	63	59979	394	0.1771	132	347	315	463	98	258	234	344	90	237	215	316	
	31.5	31.78	57	59979	356	0.1718	132	338	315	451	98	251	234	335	90	231	215	308	
	35.5	35.59	51	59979	318	0.1052	132	304	315	440	98	226	234	327	90	208	215	301	
	40	40.01	45	59979	283	0.1027	132	287	315	440	98	213	234	327	90	196	215	301	
	45	44.27	41	58786	250	0.0999	132	279	315	440	98	207	234	327	90	190	215	301	
	50	51.10	35	59979	221	0.0565	132	257	315	440	98	191	234	327	90	176	215	301	
	56	57.44	31	58786	193	0.0552	132	257	315	440	98	191	234	327	90	176	215	301	
	63	63.56	28	58786	174	0.0539	132	257	315	440	98	191	234	327	90	176	215	301	
	71	71.34	25	56435	149	0.0531	132	257	315	440	98	191	234	327	90	176	215	301	
	80	80.59	22	59000	138	0.0544	93	238	221	318	69	177	164	236	64	163	151	217	
	90	90.60	20	58786	122	0.0539	93	226	221	302	69	168	164	225	64	155	151	207	
	100	100.25	18	59983	113	0.0534	93	222	221	297	69	165	164	221	64	152	151	203	
	112	115.72	16	59000	96	0.0272	93	208	221	278	69	154	164	206	64	142	151	190	
	125	130.09	14	58786	85	0.0270	93	198	221	264	69	147	164	196	64	135	151	181	
	140	143.95	13	59983	79	0.0267	93	194	221	259	69	144	164	193	64	133	151	177	**E4B**
	160	161.18	11	59000	69	0.0155	93	177	221	243	69	131	164	175	64	121	151	161	
	180	181.20	10	58786	61	0.0154	93	168	221	243	69	125	164	167	64	115	151	154	
	200	200.50	9	59983	56	0.0153	93	165	221	243	69	123	164	164	64	113	151	150	
	224	231.44	8	59000	48	0.0083	93	161	221	243	69	107	164	143	64	99	151	132	
	250	260.19	7	59492	43	0.0083	93	161	221	243	69	103	164	137	64	94	151	126	
	280	287.90	6	59983	39	0.0082	93	161	221	243	69	100	164	134	64	92	151	123	
	315	323.14	6	61185	36	0.0082	93	161	221	243	69	95	164	134	64	88	151	117	

For tunnel bell housings with an integrated fan, please refer to the calculation method presented on page 25.
Dimensions of motor bell housing are shown in page 272.

E3B / E4B ..36 — SPLIT HOUSING — 50 Hz — 71 kNm

	i_N	i_{eff}	n_2 [rpm]	T_{2N} [Nm]	P_N [kW]	J [Kgm²]	R1 P_{t0} [kW]	R1	R1 H_2O	R1 +H_2O	S5 P_{t0} [kW]	S5	S5 H_2O	S5 +H_2O	T6 P_{t0} [kW]	T6	T6 H_2O	T6 +H_2O	Type
n_1 = 1000 rpm	**10**	9.84	102	49050	522	0.5053	160	309	315	450	119	230	234	334	109	211	215	307	E3B x3
	11.2	11.25	89	55991	521	0.4592	160	309	315	450	119	230	234	334	109	211	215	307	
	12.5	12.06	83	59693	518	0.4425	160	309	315	450	119	230	234	334	109	211	215	307	
	14	13.67	73	67560	517	0.4089	160	309	315	450	119	230	234	334	109	211	215	307	
	16	15.69	64	70799	473	0.3778	160	309	315	450	119	230	234	334	109	211	215	307	
	18	17.06	59	70799	435	0.3630	160	309	315	450	119	230	234	334	109	211	215	307	
	20	20.06	50	66625	348	0.3360	164	317	315	462	122	236	234	343	112	217	215	315	
	22.4	22.56	44	67167	312	0.3248	158	307	315	447	118	228	234	332	108	210	215	305	
	25	24.96	40	67708	284	0.3130	156	303	315	441	116	225	234	327	107	207	215	301	
	28	28.81	35	66625	242	0.1843	149	288	315	419	110	214	234	311	102	197	215	286	
	31.5	32.39	31	67167	217	0.1789	142	275	315	399	105	204	234	297	97	187	215	273	
	35.5	35.84	28	67708	198	0.1732	139	269	315	391	103	200	234	291	95	184	215	267	
	40	40.13	25	66625	174	0.1064	132	237	315	374	98	176	234	278	90	162	215	255	
	45	45.11	22	67167	156	0.1036	132	225	315	374	98	167	234	278	90	154	215	255	
	50	49.92	20	67708	142	0.1006	132	221	315	374	98	164	234	278	90	151	215	255	
	56	57.62	17	66625	121	0.0570	132	191	315	374	98	142	234	278	90	130	215	255	
	63	64.78	15	67167	109	0.0557	132	191	315	374	98	142	234	278	90	130	215	255	
	71	71.68	14	67708	99	0.0542	132	191	315	374	98	142	234	278	90	130	215	255	
	80	80.45	12	68250	89	0.0534	132	191	315	374	98	142	234	278	90	130	215	255	
	90	90.88	11	66625	77	0.0546	97	187	221	273	72	139	164	203	66	128	151	186	E4B x4
	100	102.17	10	67167	69	0.0541	93	179	221	261	69	133	164	194	64	122	151	178	
	112	113.05	9	67708	63	0.0535	93	176	221	256	69	131	164	190	64	120	151	175	
	125	130.49	8	66625	53	0.0273	93	164	221	238	69	121	164	177	64	112	151	163	
	140	146.70	7	67167	48	0.0271	93	157	221	228	69	116	164	169	64	107	151	156	
	160	162.33	6	67708	44	0.0268	93	154	221	224	69	114	164	166	64	105	151	153	
	180	181.76	6	66625	38	0.0156	93	139	221	208	69	104	164	151	64	95	151	138	
	200	204.34	5	67167	34	0.0155	93	134	221	208	69	99	164	144	64	91	151	133	
	224	226.10	4	67708	31	0.0153	93	131	221	208	69	97	164	142	64	89	151	130	
	250	260.99	4	66625	27	0.0084	93	120	221	208	69	86	164	124	64	79	151	114	
	280	293.41	3	67167	24	0.0083	93	120	221	208	69	82	164	119	64	75	151	110	
	315	324.65	3	67708	22	0.0082	93	120	221	208	69	80	164	117	64	74	151	108	
	355	364.40	3	68250	20	0.0082	93	120	221	208	69	77	164	115	64	71	151	103	

For tunnel bell housings with an integrated fan, please refer to the calculation method presented on page 25.
Dimensions of motor bell housing are shown in page 272.

E3B / E4B ..36 — SPLIT HOUSING — 50 Hz — 71 kNm

	i_N	i_{eff}	n_2 [rpm]	T_{2N} [Nm]	P_N [kW]	J [Kgm²]	R1 P_{t0} [kW]	R1	R1 H_2O	R1 $+H_2O$	S5 P_{t0} [kW]	S5	S5 H_2O	S5 $+H_2O$	T6 P_{t0} [kW]	T6	T6 H_2O	T6 $+H_2O$	Type
n_1 = 1500 rpm	**10**	9.84	152	49050	783	0.5053	150	415	315	548	111	309	234	407	102	284	215	374	
	11.2	11.25	133	55991	782	0.4592	150	415	315	548	111	309	234	407	102	284	215	374	
	12.5	12.06	124	59693	778	0.4425	150	415	315	548	111	309	234	407	102	284	215	374	
	14	13.67	110	67560	776	0.4089	150	415	315	548	111	309	234	407	102	284	215	374	
	16	15.69	96	70799	709	0.3778	150	415	315	548	111	309	234	407	102	284	215	374	
	18	17.06	88	70799	652	0.3630	150	415	315	548	111	309	234	407	102	284	215	374	
	20	20.06	75	66625	522	0.3360	154	426	315	562	114	317	234	418	105	291	215	384	
	22.4	22.56	66	67167	468	0.3248	149	413	315	544	111	307	234	405	102	282	215	372	
	25	24.96	60	67708	426	0.3130	147	407	315	536	109	302	234	399	100	278	215	366	**E3B**
	28	28.81	52	66625	363	0.1843	142	394	315	520	106	293	234	386	97	269	215	355	
	31.5	32.39	46	67167	326	0.1789	135	375	315	494	101	278	234	367	92	256	215	338	
	35.5	35.84	42	67708	297	0.1732	132	366	315	482	98	272	234	358	90	250	215	329	
	40	40.13	37	66625	261	0.1064	132	327	315	440	98	243	234	327	90	223	215	301	
	45	45.11	33	67167	234	0.1036	132	310	315	440	98	230	234	327	90	212	215	301	
	50	49.92	30	67708	213	0.1006	132	303	315	440	98	225	234	327	90	207	215	301	
	56	57.62	26	66625	182	0.0570	132	261	315	440	98	194	234	327	90	178	215	301	
	63	64.78	23	67167	163	0.0557	132	257	315	440	98	191	234	327	90	176	215	301	
	71	71.68	21	67708	148	0.0542	132	257	315	440	98	191	234	327	90	176	215	301	
	80	80.45	19	68250	133	0.0534	132	257	315	440	98	191	234	327	90	176	215	301	
	90	90.88	17	66625	115	0.0546	93	258	221	341	69	192	164	253	64	176	151	233	
	100	102.17	15	67167	103	0.0541	93	247	221	325	69	183	164	242	64	168	151	222	
	112	113.05	13	67708	94	0.0535	93	242	221	319	69	180	164	237	64	165	151	218	
	125	130.49	11	66625	80	0.0273	93	226	221	297	69	168	164	221	64	154	151	203	
	140	146.70	10	67167	72	0.0271	93	215	221	284	69	160	164	211	64	147	151	194	
	160	162.33	9	67708	66	0.0268	93	211	221	278	69	157	164	207	64	144	151	190	**E4B**
	180	181.76	8	66625	58	0.0156	93	192	221	253	69	142	164	188	64	131	151	173	
	200	204.34	7	67167	52	0.0155	93	183	221	243	69	136	164	180	64	125	151	165	
	224	226.10	7	67708	47	0.0153	93	179	221	243	69	133	164	176	64	123	151	162	
	250	260.99	6	66625	40	0.0084	93	161	221	243	69	117	164	154	64	107	151	141	
	280	293.41	5	67167	36	0.0083	93	161	221	243	69	112	164	147	64	103	151	135	
	315	324.65	5	67708	33	0.0082	93	161	221	243	69	109	164	144	64	100	151	132	
	355	364.40	4	68250	29	0.0082	93	161	221	243	69	104	164	137	64	95	151	126	

For tunnel bell housings with an integrated fan, please refer to the calculation method presented on page 25.
Dimensions of motor bell housing are shown in page 272.

E3B / E4B ..36 — SPLIT HOUSING — 60 Hz — 71 kNm

	i_N	i_{eff}	n_2 [rpm]	T_{2N} [Nm]	P_N [kW]	J [Kgm²]	R1 P_{t0} [kW]	R1	R1 H_2O	R1 +H_2O	S5 P_{t0} [kW]	S5	S5 H_2O	S5 +H_2O	T6 P_{t0} [kW]	T6	T6 H_2O	T6 +H_2O	Type
n_1 = 1200 rpm	**10**	9.84	122	49050	626	0.5053	155	352	315	489	115	262	234	363	106	241	215	334	E3B x3
	11.2	11.25	107	55991	625	0.4592	155	352	315	489	115	262	234	363	106	241	215	334	
	12.5	12.06	100	59693	622	0.4425	155	352	315	489	115	262	234	363	106	241	215	334	
	14	13.67	88	67560	621	0.4089	155	352	315	489	115	262	234	363	106	241	215	334	
	16	15.69	76	70799	567	0.3778	155	352	315	489	115	262	234	363	106	241	215	334	
	18	17.06	70	70799	521	0.3630	155	352	315	489	115	262	234	363	106	241	215	334	
	20	20.06	60	66625	417	0.3360	159	362	315	502	118	269	234	373	109	247	215	343	
	22.4	22.56	53	67167	374	0.3248	154	350	315	486	115	260	234	361	105	239	215	332	
	25	24.96	48	67708	341	0.3130	152	345	315	479	113	256	234	356	104	236	215	327	
	28	28.81	42	66625	291	0.1843	146	332	315	460	109	246	234	342	100	226	215	314	
	31.5	32.39	37	67167	261	0.1789	139	316	315	438	103	235	234	326	95	216	215	299	
	35.5	35.84	33	67708	237	0.1732	136	309	315	429	101	229	234	318	93	211	215	293	
	40	40.13	30	66625	209	0.1064	132	274	315	380	98	203	234	282	90	187	215	259	
	45	45.11	27	67167	187	0.1036	132	260	315	374	98	193	234	278	90	178	215	255	
	50	49.92	24	67708	170	0.1006	132	254	315	374	98	189	234	278	90	174	215	255	
	56	57.62	21	66625	145	0.0570	132	219	315	374	98	162	234	278	90	149	215	255	
	63	64.78	19	67167	130	0.0557	132	208	315	374	98	155	234	278	90	142	215	255	
	71	71.68	17	67708	119	0.0542	132	203	315	374	98	151	234	278	90	139	215	255	
	80	80.45	15	68250	107	0.0534	132	192	315	374	98	142	234	278	90	131	215	255	
	90	90.88	13	66625	92	0.0546	95	216	221	300	71	161	164	223	65	148	151	205	E4B x4
	100	102.17	12	67167	83	0.0541	93	207	221	287	69	154	164	213	64	141	151	196	
	112	113.05	11	67708	75	0.0535	93	203	221	282	69	151	164	209	64	138	151	192	
	125	130.49	9	66625	64	0.0273	93	189	221	262	69	140	164	195	64	129	151	179	
	140	146.70	8	67167	58	0.0271	93	181	221	251	69	134	164	186	64	123	151	171	
	160	162.33	7	67708	52	0.0268	93	177	221	246	69	132	164	183	64	121	151	168	
	180	181.76	7	66625	46	0.0156	93	161	221	223	69	119	164	166	64	110	151	152	
	200	204.34	6	67167	41	0.0155	93	154	221	213	69	114	164	159	64	105	151	146	
	224	226.10	5	67708	38	0.0153	93	151	221	210	69	112	164	155	64	103	151	143	
	250	260.99	5	66625	32	0.0084	93	132	221	208	69	98	164	136	64	90	151	125	
	280	293.41	4	67167	29	0.0083	93	127	221	208	69	94	164	131	64	86	151	120	
	315	324.65	4	67708	26	0.0082	93	124	221	208	69	92	164	128	64	85	151	118	
	355	364.40	3	68250	24	0.0082	93	120	221	208	69	88	164	122	64	81	151	112	

For tunnel bell housings with an integrated fan, please refer to the calculation method presented on page 25.
Dimensions of motor bell housing are shown in page 272.

E3B / E4B ..36 — SPLIT HOUSING — 60 Hz — 71 kNm

	i_N	i_{eff}	n_2 [rpm]	T_{2N} [Nm]	P_N [kW]	J [Kgm²]	R1 P_{t0} [kW]	R1	R1 H_2O	R1 $+H_2O$	S5 P_{t0} [kW]	S5	S5 H_2O	S5 $+H_2O$	T6 P_{t0} [kW]	T6	T6 H_2O	T6 $+H_2O$	Type
n_1 = 1800 rpm	**10**	9.84	183	49050	939	0.5053	146	428	315	557	108	318	234	414	100	293	215	380	
	11.2	11.25	160	55991	938	0.4592	146	428	315	557	108	318	234	414	100	293	215	380	
	12.5	12.06	149	59693	933	0.4425	146	428	315	557	108	318	234	414	100	293	215	380	
	14	13.67	132	67560	931	0.4089	146	428	315	557	108	318	234	414	100	293	215	380	
	16	15.69	115	70799	851	0.3778	146	428	315	557	108	318	234	414	100	293	215	380	
	18	17.06	106	70799	782	0.3630	146	428	315	557	108	318	234	414	100	293	215	380	
	20	20.06	90	66625	626	0.3360	150	439	315	571	111	326	234	424	102	300	215	390	
	22.4	22.56	80	67167	561	0.3248	145	426	315	554	108	317	234	412	99	291	215	378	
	25	24.96	72	67708	511	0.3130	143	420	315	546	106	312	234	406	98	287	215	373	**E3B** (x3)
	28	28.81	62	66625	436	0.1843	139	409	315	531	103	304	234	395	95	279	215	363	
	31.5	32.39	56	67167	391	0.1789	132	388	315	505	98	288	234	375	90	265	215	345	
	35.5	35.84	50	67708	356	0.1732	132	378	315	492	98	281	234	365	90	258	215	336	
	40	40.13	45	66625	313	0.1064	132	340	315	442	98	252	234	328	90	232	215	302	
	45	45.11	40	67167	281	0.1036	132	321	315	440	98	239	234	327	90	219	215	301	
	50	49.92	36	67708	256	0.1006	132	313	315	440	98	233	234	327	90	214	215	301	
	56	57.62	31	66625	218	0.0570	132	272	315	440	98	202	234	327	90	186	215	301	
	63	64.78	28	67167	195	0.0557	132	258	315	440	98	192	234	327	90	176	215	301	
	71	71.68	25	67708	178	0.0542	132	257	315	440	98	191	234	327	90	176	215	301	
	80	80.45	22	68250	160	0.0534	132	257	315	440	98	191	234	327	90	176	215	301	
	90	90.88	20	66625	138	0.0546	93	269	221	350	69	200	164	260	64	184	151	239	
	100	102.17	18	67167	124	0.0541	93	257	221	334	69	191	164	248	64	175	151	228	
	112	113.05	16	67708	113	0.0535	93	251	221	327	69	187	164	243	64	172	151	223	
	125	130.49	14	66625	96	0.0273	93	235	221	305	69	174	164	227	64	160	151	209	
	140	146.70	12	67167	86	0.0271	93	224	221	291	69	166	164	217	64	153	151	199	
	160	162.33	11	67708	79	0.0268	93	219	221	285	69	163	164	212	64	150	151	195	**E4B** (x4)
	180	181.76	10	66625	69	0.0156	93	200	221	259	69	148	164	193	64	136	151	177	
	200	204.34	9	67167	62	0.0155	93	191	221	248	69	142	164	184	64	130	151	169	
	224	226.10	8	67708	56	0.0153	93	186	221	243	69	138	164	180	64	127	151	165	
	250	260.99	7	66625	48	0.0084	93	163	221	243	69	121	164	158	64	111	151	145	
	280	293.41	6	67167	43	0.0083	93	161	221	243	69	116	164	151	64	106	151	138	
	315	324.65	6	67708	39	0.0082	93	161	221	243	69	113	164	147	64	104	151	135	
	355	364.40	5	68250	35	0.0082	93	161	221	243	69	107	164	140	64	99	151	128	

For tunnel bell housings with an integrated fan, please refer to the calculation method presented on page 25.
Dimensions of motor bell housing are shown in page 272.

E3B / E4B ..40 — SPLIT HOUSING — 50 Hz — 85 kNm

	i_N	i_{eff}	n_2 [rpm]	T_{2N} [Nm]	P_N [kW]	J [Kgm²]	R1 P_{t0} [kW]	R1	R1 H_2O	R1 +H_2O	S5 P_{t0} [kW]	S5	S5 H_2O	S5 +H_2O	T6 P_{t0} [kW]	T6	T6 H_2O	T6 +H_2O	Type
n_1 = 1000 rpm	**11.2**	11.51	87	57365	522	0.5443	198	386	543	706	147	287	403	525	135	264	371	482	
	12.5	13.16	76	65239	519	0.4891	198	386	543	706	147	287	403	525	135	264	371	482	
	14	14.11	71	69738	518	0.4686	198	386	543	706	147	287	403	525	135	264	371	482	
	16	15.99	63	78737	516	0.4291	198	386	543	706	147	287	403	525	135	264	371	482	
	18	18.35	54	82674	472	0.3931	198	386	543	706	147	287	403	525	135	264	371	482	
	20	19.96	50	82674	434	0.3760	198	386	543	706	147	287	403	525	135	264	371	482	
	22.4	23.47	43	85202	380	0.3455	208	406	544	742	154	301	404	551	142	277	371	506	
	25	26.39	38	85202	338	0.3322	196	382	542	699	146	284	403	520	134	261	370	478	
	28	29.20	34	80311	288	0.3191	190	371	542	678	141	276	403	504	130	253	370	463	**E3B**
	31.5	33.70	30	83556	260	0.1889	177	347	542	633	132	257	403	471	121	237	370	433	x3
	35.5	37.89	26	83556	231	0.1825	168	328	542	610	125	244	403	453	115	224	370	417	
	40	41.92	24	78713	197	0.1761	163	318	542	610	121	236	403	453	111	217	370	417	
	45	46.94	21	83556	186	0.1087	151	285	542	610	112	212	403	453	103	195	370	417	
	50	52.77	19	81926	163	0.1054	151	270	542	610	112	201	403	453	103	185	370	417	
	56	58.39	17	78713	141	0.1021	151	263	542	610	112	195	403	453	103	180	370	417	
	63	67.41	15	83556	130	0.0582	151	228	542	610	112	170	403	453	103	156	370	417	
	71	75.78	13	81926	113	0.0566	151	218	542	610	112	162	403	453	103	149	370	417	
	80	83.85	12	77131	96	0.0550	151	218	542	610	112	162	403	453	103	149	370	417	
	90	94.11	11	75565	84	0.0539	151	218	542	610	112	162	403	453	103	149	370	417	
	100	106.31	9	77683	77	0.0551	114	222	380	406	84	165	282	301	78	152	260	277	
	112	119.52	8	80311	70	0.0544	109	213	380	389	81	158	282	289	74	145	260	266	
	125	132.24	8	77131	61	0.0538	107	208	380	380	79	154	282	282	73	142	260	259	
	140	152.65	7	77683	53	0.0276	106	193	380	353	79	143	282	262	72	132	260	241	
	160	171.61	6	80311	49	0.0272	106	185	380	340	79	138	282	252	72	126	260	231	
	180	189.89	5	79000	44	0.0269	106	181	380	336	79	135	282	246	72	124	260	226	**E4B**
	200	212.62	5	77683	38	0.0157	106	164	380	336	79	122	282	222	72	112	260	204	x4
	224	239.03	4	80311	35	0.0156	106	157	380	336	79	117	282	214	72	108	260	197	
	250	264.49	4	79000	31	0.0154	106	155	380	336	79	114	282	209	72	105	260	192	
	280	305.31	3	77683	27	0.0084	106	153	380	336	79	100	282	186	72	92	260	168	
	315	343.23	3	78713	24	0.0083	106	153	380	336	79	96	282	186	72	89	260	162	
	355	379.78	3	79000	22	0.0083	106	153	380	336	79	94	282	186	72	87	260	159	
	400	426.28	2	79658	20	0.0082	106	153	380	336	79	90	282	186	72	83	260	157	

For tunnel bell housings with an integrated fan, please refer to the calculation method presented on page 25.
Dimensions of motor bell housing are shown in page 272.

E3B / E4B ..40 — SPLIT HOUSING — 50 Hz — 85 kNm

	i_N	i_{eff}	n_2 [rpm]	T_{2N} [Nm]	P_N [kW]	J [Kgm²]	R1 P_{t0} [kW]	R1	R1 H_2O	R1 $+H_2O$	S5 P_{t0} [kW]	S5	S5 H_2O	S5 $+H_2O$	T6 P_{t0} [kW]	T6	T6 H_2O	T6 $+H_2O$	Type
n_1 = 1500 rpm	**11.2**	11.51	130	57365	783	0.5443	188	523	542	827	139	389	403	614	128	357	370	565	
	12.5	13.16	114	65239	779	0.4891	188	523	542	827	139	389	403	614	128	357	370	565	
	14	14.11	106	69738	777	0.4686	188	523	542	827	139	389	403	614	128	357	370	565	
	16	15.99	94	78737	773	0.4291	188	523	542	827	139	389	403	614	128	357	370	565	
	18	18.35	82	82674	708	0.3931	188	523	542	827	139	389	403	614	128	357	370	565	
	20	19.96	75	82674	651	0.3760	188	523	542	827	139	389	403	614	128	357	370	565	
	22.4	23.47	64	85202	570	0.3455	198	552	542	871	147	410	403	647	135	377	370	595	
	25	26.39	57	85202	507	0.3322	186	518	542	819	138	385	403	608	127	354	370	559	
	28	29.20	51	80311	432	0.3191	179	500	542	790	133	371	403	587	122	341	370	539	**E3B** (x3)
	31.5	33.70	45	83556	389	0.1889	170	474	542	749	126	352	403	557	116	324	370	512	
	35.5	37.89	40	83556	346	0.1825	160	447	542	706	119	332	403	525	109	305	370	482	
	40	41.92	36	78713	295	0.1761	155	431	542	686	115	320	403	510	106	295	370	469	
	45	46.94	32	83556	280	0.1087	151	394	542	686	112	293	403	510	103	269	370	469	
	50	52.77	28	81926	244	0.1054	151	371	542	686	112	276	403	510	103	254	370	469	
	56	58.39	26	78713	212	0.1021	151	360	542	686	112	267	403	510	103	246	370	469	
	63	67.41	22	83556	195	0.0582	151	315	542	686	112	234	403	510	103	215	370	469	
	71	75.78	20	81926	170	0.0566	151	297	542	686	112	221	403	510	103	203	370	469	
	80	83.85	18	77131	144	0.0550	151	294	542	686	112	218	403	510	103	201	370	469	
	90	94.11	16	75565	126	0.0539	151	294	542	686	112	218	403	510	103	201	370	469	
	100	106.31	14	77683	115	0.0551	110	306	380	483	81	227	282	359	75	209	260	330	
	112	119.52	13	80311	106	0.0544	106	293	380	463	79	218	282	344	72	200	260	316	
	125	132.24	11	77131	92	0.0538	106	285	380	450	79	212	282	335	72	195	260	308	
	140	152.65	10	77683	80	0.0276	106	267	380	421	79	198	282	313	72	182	260	288	
	160	171.61	9	80311	74	0.0272	106	256	380	404	79	190	282	300	72	175	260	276	
	180	189.89	8	79000	65	0.0269	106	250	380	394	79	185	282	293	72	170	260	269	**E4B** (x4)
	200	212.62	7	77683	57	0.0157	106	226	380	378	79	168	282	265	72	154	260	244	
	224	239.03	6	80311	53	0.0156	106	217	380	378	79	161	282	255	72	148	260	234	
	250	264.49	6	79000	47	0.0154	106	212	380	378	79	157	282	248	72	144	260	228	
	280	305.31	5	77683	40	0.0084	106	206	380	378	79	137	282	217	72	126	260	199	
	315	343.23	4	78713	36	0.0083	106	206	380	378	79	131	282	209	72	121	260	191	
	355	379.78	4	79000	33	0.0083	106	206	380	378	79	128	282	209	72	118	260	186	
	400	426.28	4	79658	29	0.0082	106	206	380	378	79	122	282	209	72	112	260	178	

For tunnel bell housings with an integrated fan, please refer to the calculation method presented on page 25.
Dimensions of motor bell housing are shown in page 272.

E3B / E4B ..40

SPLIT HOUSING

60 Hz

85 kNm

	i_N	i_{eff}	n_2 [rpm]	T_{2N} [Nm]	P_N [kW]	J [Kgm²]	R1 P_{t0} [kW]	R1	R1 H_2O	R1 +H_2O	S5 P_{t0} [kW]	S5	S5 H_2O	S5 +H_2O	T6 P_{t0} [kW]	T6	T6 H_2O	T6 +H_2O	Type
n_1 = 1200 rpm	**11.2**	11.51	104	57365	626	0.5443	193	442	542	754	144	328	403	560	132	302	370	515	
	12.5	13.16	91	65239	623	0.4891	193	442	542	754	144	328	403	560	132	302	370	515	
	14	14.11	85	69738	621	0.4686	193	442	542	754	144	328	403	560	132	302	370	515	
	16	15.99	75	78737	619	0.4291	193	442	542	754	144	328	403	560	132	302	370	515	
	18	18.35	65	82674	566	0.3931	193	442	542	754	144	328	403	560	132	302	370	515	
	20	19.96	60	82674	521	0.3760	193	442	542	754	144	328	403	560	132	302	370	515	
	22.4	23.47	51	85202	456	0.3455	203	465	542	794	151	345	403	590	139	318	370	542	
	25	26.39	45	85202	406	0.3322	191	438	542	747	142	325	403	555	131	299	370	510	
	28	29.20	41	80311	346	0.3191	185	423	542	723	137	315	403	537	126	289	370	493	**E3B** x3
	31.5	33.70	36	83556	312	0.1889	174	399	542	681	130	296	403	506	119	272	370	465	
	35.5	37.89	32	83556	277	0.1825	165	377	542	643	122	280	403	478	113	257	370	439	
	40	41.92	29	78713	236	0.1761	159	365	542	622	118	271	403	462	109	249	370	425	
	45	46.94	26	83556	224	0.1087	151	330	542	610	112	245	403	453	103	225	370	417	
	50	52.77	23	81926	195	0.1054	151	312	542	610	112	232	403	453	103	213	370	417	
	56	58.39	21	78713	169	0.1021	151	303	542	610	112	225	403	453	103	207	370	417	
	63	67.41	18	83556	156	0.0582	151	263	542	610	112	195	403	453	103	180	370	417	
	71	75.78	16	81926	136	0.0566	151	249	542	610	112	185	403	453	103	170	370	417	
	80	83.85	14	77131	116	0.0550	151	241	542	610	112	179	403	453	103	164	370	417	
	90	94.11	13	75565	101	0.0539	151	226	542	610	112	168	403	453	103	155	370	417	
	100	106.31	11	77683	92	0.0551	112	256	380	437	83	190	282	325	76	175	260	299	
	112	119.52	10	80311	84	0.0544	107	245	380	419	80	182	282	311	73	168	260	286	
	125	132.24	9	77131	73	0.0538	106	239	380	408	79	178	282	303	72	163	260	279	
	140	152.65	8	77683	64	0.0276	106	223	380	381	79	166	282	283	72	152	260	260	
	160	171.61	7	80311	59	0.0272	106	214	380	365	79	159	282	271	72	146	260	249	
	180	189.89	6	79000	52	0.0269	106	209	380	357	79	155	282	265	72	143	260	244	**E4B** x4
	200	212.62	6	77683	46	0.0157	106	189	380	336	79	140	282	240	72	129	260	220	
	224	239.03	5	80311	42	0.0156	106	182	380	336	79	135	282	230	72	124	260	212	
	250	264.49	5	79000	38	0.0154	106	177	380	336	79	132	282	225	72	121	260	207	
	280	305.31	4	77683	32	0.0084	106	155	380	336	79	115	282	197	72	106	260	181	
	315	343.23	3	78713	29	0.0083	106	153	380	336	79	111	282	189	72	102	260	173	
	355	379.78	3	79000	26	0.0083	106	153	380	336	79	108	282	186	72	99	260	170	
	400	426.28	3	79658	23	0.0082	106	153	380	336	79	103	282	186	72	95	260	162	

For tunnel bell housings with an integrated fan, please refer to the calculation method presented on page 25.
Dimensions of motor bell housing are shown in page 272.

E3B / E4B ..40 SPLIT HOUSING 60 Hz 85 kNm

	i_N	i_{eff}	n_2 [rpm]	T_{2N} [Nm]	P_N [kW]	J [Kgm²]	R1 P_{t0} [kW]	R1	R1 H_2O	R1 $+H_2O$	S5 P_{t0} [kW]	S5	S5 H_2O	S5 $+H_2O$	T6 P_{t0} [kW]	T6	T6 H_2O	T6 $+H_2O$	Type
n_1 = 1800 rpm	**11.2**	11.51	156	57365	939	0.5443	183	542	542	838	136	402	403	622	125	370	370	572	
	12.5	13.16	137	65239	934	0.4891	183	542	542	838	136	402	403	622	125	370	370	572	
	14	14.11	128	69738	932	0.4686	183	542	542	838	136	402	403	622	125	370	370	572	
	16	15.99	113	78737	928	0.4291	183	542	542	838	136	402	403	622	125	370	370	572	
	18	18.35	98	82674	849	0.3931	183	542	542	838	136	402	403	622	125	370	370	572	
	20	19.96	90	82674	781	0.3760	183	542	542	838	136	402	403	622	125	370	370	572	
	22.4	23.47	77	85202	684	0.3455	193	571	542	884	144	425	403	657	132	390	370	604	
	25	26.39	68	85202	609	0.3322	182	537	542	830	135	399	403	617	124	367	370	567	
	28	29.20	62	80311	518	0.3191	175	516	542	799	130	384	403	594	119	353	370	546	**E3B** (x3)
	31.5	33.70	53	83556	467	0.1889	166	492	542	761	124	365	403	565	114	336	370	519	
	35.5	37.89	48	83556	416	0.1825	156	463	542	716	116	344	403	532	107	316	370	489	
	40	41.92	43	78713	354	0.1761	151	445	542	689	112	331	403	512	103	304	370	471	
	45	46.94	38	83556	335	0.1087	151	409	542	686	112	304	403	510	103	280	370	469	
	50	52.77	34	81926	293	0.1054	151	385	542	686	112	286	403	510	103	263	370	469	
	56	58.39	31	78713	254	0.1021	151	372	542	686	112	276	403	510	103	254	370	469	
	63	67.41	27	83556	234	0.0582	151	328	542	686	112	244	403	510	103	224	370	469	
	71	75.78	24	81926	204	0.0566	151	309	542	686	112	230	403	510	103	211	370	469	
	80	83.85	21	77131	173	0.0550	151	297	542	686	112	221	403	510	103	203	370	469	
	90	94.11	19	75565	151	0.0539	151	294	542	686	112	218	403	510	103	201	370	469	
	100	106.31	17	77683	138	0.0551	108	319	380	493	80	237	282	366	74	218	260	336	
	112	119.52	15	80311	127	0.0544	106	305	380	471	79	226	282	350	72	208	260	322	
	125	132.24	14	77131	110	0.0538	106	296	380	458	79	220	282	341	72	202	260	313	
	140	152.65	12	77683	96	0.0276	106	278	380	429	79	206	282	319	72	190	260	293	
	160	171.61	10	80311	88	0.0272	106	266	380	411	79	198	282	306	72	182	260	281	
	180	189.89	9	79000	78	0.0269	106	259	380	401	79	193	282	298	72	177	260	274	**E4B** (x4)
	200	212.62	8	77683	69	0.0157	106	235	380	378	79	175	282	271	72	161	260	249	
	224	239.03	8	80311	63	0.0156	106	226	380	378	79	168	282	259	72	154	260	239	
	250	264.49	7	79000	56	0.0154	106	220	380	378	79	163	282	253	72	150	260	232	
	280	305.31	6	77683	48	0.0084	106	206	380	378	79	143	282	221	72	131	260	203	
	315	343.23	5	78713	43	0.0083	106	206	380	378	79	136	282	211	72	125	260	194	
	355	379.78	5	79000	39	0.0083	106	206	380	378	79	133	282	209	72	122	260	189	
	400	426.28	4	79658	35	0.0082	106	206	380	378	79	127	282	209	72	116	260	180	

For tunnel bell housings with an integrated fan, please refer to the calculation method presented on page 25.
Dimensions of motor bell housing are shown in page 272.

E3B / E4B ..42 — SPLIT HOUSING — 50 Hz — 113 kNm

	i_N	i_{eff}	n_2 [rpm]	T_{2N} [Nm]	P_N [kW]	J [Kgm²]	R1 P_{t0} [kW]	R1	R1 H_2O	R1 $+H_2O$	S5 P_{t0} [kW]	S5	S5 H_2O	S5 $+H_2O$	T6 P_{t0} [kW]	T6	T6 H_2O	T6 $+H_2O$	Type
n_1 = 1000 rpm	**9**	8.73	115	75497	906	1.0436	236	473	501	737	176	351	372	548	161	323	342	503	
	10	9.92	101	86283	911	1.0410	236	473	501	737	176	351	372	548	161	323	342	503	
	11.2	10.81	93	93473	906	1.0476	236	473	501	737	176	351	372	548	161	323	342	503	
	12.5	12.40	81	107135	904	1.0144	236	473	501	737	176	351	372	548	161	323	342	503	
	14	14.12	71	113201	839	0.9822	236	473	501	737	176	351	372	548	161	323	342	503	
	16	15.55	64	113201	762	0.9637	236	473	501	737	176	351	372	548	161	323	342	503	
	18	17.77	56	106825	630	0.9284	245	491	520	766	182	365	386	569	168	336	355	523	
	20	19.81	50	106825	565	0.9025	233	467	494	728	173	347	367	541	159	319	338	497	
	22.4	21.58	46	106825	518	0.8897	230	460	488	717	171	342	362	533	157	315	333	490	**E3B** x3
	25	25.51	39	106825	438	0.4850	214	428	471	666	159	318	350	495	146	292	321	455	
	28	28.44	35	106825	393	0.4725	204	409	463	636	152	304	344	473	139	279	316	435	
	31.5	30.99	32	106825	361	0.4662	202	403	463	629	150	300	344	467	138	276	316	429	
	35.5	35.54	28	104740	309	0.2807	183	363	463	574	136	269	344	426	125	248	316	392	
	40	39.61	25	104740	277	0.2743	180	348	463	563	133	258	344	419	123	238	316	385	
	45	43.16	23	104740	254	0.2710	179	344	463	562	133	256	344	417	122	235	316	384	
	50	51.03	20	104740	215	0.1511	171	299	463	540	127	223	344	401	117	205	316	369	
	56	56.88	18	104740	193	0.1480	171	288	463	540	127	214	344	401	117	197	316	369	
	63	61.97	16	104740	177	0.1464	171	285	463	540	127	212	344	401	117	195	316	369	
	71	70.50	14	102677	153	0.1423	171	281	463	540	127	209	344	401	117	192	316	369	
	80	79.28	13	104740	138	0.1210	130	260	325	406	97	193	241	301	89	178	222	277	
	90	88.37	11	102677	122	0.1197	124	248	325	386	92	184	241	287	85	169	222	264	
	100	96.28	10	102677	112	0.1190	121	243	325	379	90	181	241	282	83	166	222	259	
	112	113.83	9	102677	94	0.0655	120	229	325	356	89	170	241	265	82	156	222	243	
	125	126.89	8	102677	85	0.0649	120	218	325	340	89	162	241	253	82	149	222	232	
	140	138.24	7	102677	78	0.0646	120	214	325	334	89	159	241	248	82	146	222	228	**E4B** x4
	160	158.55	6	100633	66	0.0378	120	195	325	304	89	145	241	226	82	133	222	208	
	180	176.74	6	102677	61	0.0375	120	187	325	292	89	139	241	217	82	128	222	199	
	200	192.55	5	102677	56	0.0373	120	184	325	286	89	137	241	213	82	126	222	196	
	224	227.67	4	100633	46	0.0203	120	173	325	278	89	121	241	188	82	111	222	173	
	250	253.78	4	102677	42	0.0201	120	173	325	278	89	116	241	180	82	106	222	166	
	280	276.48	4	102677	39	0.0201	120	173	325	278	89	114	241	177	82	104	222	163	
	315	314.54	3	98611	33	0.0199	120	173	325	278	89	108	241	169	82	99	222	155	

For tunnel bell housings with an integrated fan, please refer to the calculation method presented on page 25.
Dimensions of motor bell housing are shown in page 272.

E3B / E4B ..42 — SPLIT HOUSING — 50 Hz — 113 kNm

n_1 = 1500 rpm

i_N	i_{eff}	n_2 [rpm]	T_{2N} [Nm]	P_N [kW]	J [Kgm²]	R1 P_{t0} [kW]	R1	R1 H_2O	R1 $+H_2O$	S5 P_{t0} [kW]	S5	S5 H_2O	S5 $+H_2O$	T6 P_{t0} [kW]	T6	T6 H_2O	T6 $+H_2O$	Type
9	8.73	172	75497	1359	1.0436	229	655	489	911	170	487	363	677	156	448	334	622	
10	9.92	151	86283	1366	1.0410	229	655	489	911	170	487	363	677	156	448	334	622	
11.2	10.81	139	93473	1359	1.0476	229	655	489	911	170	487	363	677	156	448	334	622	
12.5	12.40	121	107135	1357	1.0144	229	655	489	911	170	487	363	677	156	448	334	622	
14	14.12	106	113201	1259	0.9822	229	655	489	911	170	487	363	677	156	448	334	622	
16	15.55	96	113201	1144	0.9637	229	655	489	911	170	487	363	677	156	448	334	622	
18	17.77	84	106825	944	0.9284	239	682	505	949	177	507	375	705	163	466	345	648	
20	19.81	76	106825	847	0.9025	226	647	482	900	168	481	358	669	155	442	329	615	
22.4	21.58	70	106825	778	0.8897	222	636	479	885	165	473	356	657	152	435	327	604	**E3B** (x3)
25	25.51	59	106825	658	0.4850	208	594	463	825	154	441	344	613	142	405	316	564	
28	28.44	53	106825	590	0.4725	197	564	463	785	147	419	344	583	135	385	316	536	
31.5	30.99	48	106825	542	0.4662	194	556	463	773	144	413	344	574	133	379	316	528	
35.5	35.54	42	104740	463	0.2807	179	502	463	698	133	373	344	519	122	343	316	477	
40	39.61	38	104740	415	0.2743	175	479	463	670	130	356	344	498	120	327	316	458	
45	43.16	35	104740	381	0.2710	174	473	463	667	130	351	344	495	119	323	316	455	
50	51.03	29	104740	322	0.1511	171	413	463	626	127	307	344	465	117	282	316	428	
56	56.88	26	104740	289	0.1480	171	396	463	626	127	294	344	465	117	270	316	428	
63	61.97	24	104740	265	0.1464	171	390	463	626	127	290	344	465	117	266	316	428	
71	70.50	21	102677	229	0.1423	171	383	463	626	127	285	344	465	117	262	316	428	
80	79.28	19	104740	208	0.1210	124	356	325	495	92	264	241	368	85	243	222	338	
90	88.37	17	102677	182	0.1197	120	338	325	470	89	251	241	349	82	231	222	321	
100	96.28	16	102677	168	0.1190	120	331	325	461	89	246	241	342	82	226	222	315	
112	113.83	13	102677	142	0.0655	120	314	325	437	89	233	241	324	82	214	222	298	
125	126.89	12	102677	127	0.0649	120	299	325	416	89	222	241	309	82	204	222	284	
140	138.24	11	102677	117	0.0646	120	293	325	408	89	218	241	303	82	200	222	278	**E4B** (x4)
160	158.55	9	100633	100	0.0378	120	269	325	374	89	200	241	278	82	184	222	255	
180	176.74	8	102677	91	0.0375	120	257	325	357	89	191	241	266	82	176	222	244	
200	192.55	8	102677	84	0.0373	120	252	325	350	89	187	241	260	82	172	222	239	
224	227.67	7	100633	69	0.0203	120	233	325	322	89	165	241	229	82	152	222	211	
250	253.78	6	102677	64	0.0201	120	233	325	322	89	158	241	220	82	145	222	202	
280	276.48	5	102677	58	0.0201	120	233	325	322	89	155	241	215	82	142	222	198	
315	314.54	5	98611	49	0.0199	120	233	325	322	89	147	241	204	82	135	222	188	

For tunnel bell housings with an integrated fan, please refer to the calculation method presented on page 25.
Dimensions of motor bell housing are shown in page 272.

E3B / E4B ..42 — SPLIT HOUSING — 60 Hz — 113 kNm

	i_N	i_{eff}	n_2 [rpm]	T_{2N} [Nm]	P_N [kW]	J [Kgm²]	R1 P_{t0} [kW]	R1	R1 H_2O	R1 +H_2O	S5 P_{t0} [kW]	S5	S5 H_2O	S5 +H_2O	T6 P_{t0} [kW]	T6	T6 H_2O	T6 +H_2O	Type
n_1 = 1200 rpm	**9**	8.73	137	75497	1087	1.0436	233	546	495	807	173	406	367	599	159	373	338	551	
	10	9.92	121	86283	1093	1.0410	233	546	495	807	173	406	367	599	159	373	338	551	
	11.2	10.81	111	93473	1087	1.0476	233	546	495	807	173	406	367	599	159	373	338	551	
	12.5	12.40	97	107135	1085	1.0144	233	546	495	807	173	406	367	599	159	373	338	551	
	14	14.12	85	113201	1007	0.9822	233	546	495	807	173	406	367	599	159	373	338	551	
	16	15.55	77	113201	915	0.9637	233	546	495	807	173	406	367	599	159	373	338	551	
	18	17.77	68	106825	755	0.9284	242	568	513	839	180	422	381	623	166	388	350	573	
	20	19.81	61	106825	678	0.9025	230	540	487	797	171	401	362	592	157	369	333	544	
	22.4	21.58	56	106825	622	0.8897	226	531	484	784	168	395	359	583	155	363	330	535	**E3B**
	25	25.51	47	106825	526	0.4850	211	494	467	730	157	367	347	542	144	338	319	499	x3
	28	28.44	42	106825	472	0.4725	201	471	463	696	149	350	344	517	137	322	316	475	
	31.5	30.99	39	106825	433	0.4662	198	465	463	686	147	345	344	510	135	317	316	469	
	35.5	35.54	34	104740	370	0.2807	181	419	463	618	135	311	344	460	124	286	316	422	
	40	39.61	30	104740	332	0.2743	178	401	463	592	132	298	344	440	121	274	316	404	
	45	43.16	28	104740	305	0.2710	177	396	463	586	131	294	344	436	121	270	316	400	
	50	51.03	24	104740	258	0.1511	171	345	463	546	127	256	344	406	117	236	316	373	
	56	56.88	21	104740	231	0.1480	171	332	463	540	127	246	344	401	117	226	316	369	
	63	61.97	19	104740	212	0.1464	171	327	463	540	127	243	344	401	117	224	316	369	
	71	70.50	17	102677	183	0.1423	171	323	463	540	127	240	344	401	117	220	316	369	
	80	79.28	15	104740	166	0.1210	128	299	325	442	95	222	241	328	87	204	222	302	
	90	88.37	14	102677	146	0.1197	121	284	325	420	90	211	241	312	83	194	222	287	
	100	96.28	12	102677	134	0.1190	120	279	325	412	89	207	241	306	82	191	222	281	
	112	113.83	11	102677	113	0.0655	120	264	325	389	89	196	241	289	82	180	222	266	
	125	126.89	9	102677	102	0.0649	120	251	325	371	89	187	241	276	82	172	222	253	
	140	138.24	9	102677	93	0.0646	120	246	325	364	89	183	241	270	82	168	222	248	**E4B**
	160	158.55	8	100633	80	0.0378	120	225	325	332	89	167	241	247	82	154	222	227	x4
	180	176.74	7	102677	73	0.0375	120	216	325	318	89	160	241	236	82	147	222	217	
	200	192.55	6	102677	67	0.0373	120	211	325	312	89	157	241	232	82	144	222	213	
	224	227.67	5	100633	56	0.0203	120	186	325	278	89	139	241	204	82	127	222	188	
	250	253.78	5	102677	51	0.0201	120	179	325	278	89	133	241	196	82	122	222	180	
	280	276.48	4	102677	47	0.0201	120	175	325	278	89	130	241	192	82	120	222	177	
	315	314.54	4	98611	39	0.0199	120	173	325	278	89	124	241	183	82	114	222	168	

For tunnel bell housings with an integrated fan, please refer to the calculation method presented on page 25.
Dimensions of motor bell housing are shown in page 272.

E3B / E4B ..42 — SPLIT HOUSING — 60 Hz — 113 kNm

	i_N	i_{eff}	n_2 [rpm]	T_{2N} [Nm]	P_N [kW]	J [Kgm²]	R1 P_{t0} [kW]	R1	R1 H_2O	R1 $+H_2O$	S5 P_{t0} [kW]	S5	S5 H_2O	S5 $+H_2O$	T6 P_{t0} [kW]	T6	T6 H_2O	T6 $+H_2O$	Type
n_1 = 1800 rpm	9	8.73	206	75497	1630	1.0436	225	682	483	934	167	507	359	694	154	466	330	638	
	10	9.92	181	86283	1640	1.0410	225	682	483	934	167	507	359	694	154	466	330	638	
	11.2	10.81	167	93473	1630	1.0476	225	682	483	934	167	507	359	694	154	466	330	638	
	12.5	12.40	145	107135	1628	1.0144	225	682	483	934	167	507	359	694	154	466	330	638	
	14	14.12	127	113201	1511	0.9822	225	682	483	934	167	507	359	694	154	466	330	638	
	16	15.55	116	113201	1372	0.9637	225	682	483	934	167	507	359	694	154	466	330	638	
	18	17.77	101	106825	1133	0.9284	234	711	496	973	174	528	369	723	160	486	339	664	
	20	19.81	91	106825	1017	0.9025	222	674	477	922	165	501	355	685	152	460	326	630	
	22.4	21.58	83	106825	933	0.8897	218	662	474	906	162	492	352	673	149	452	324	619	E3B (x3)
	25	25.51	71	106825	789	0.4850	205	621	463	850	152	461	344	631	140	424	316	580	
	28	28.44	63	106825	708	0.4725	194	589	463	807	144	438	344	599	133	403	316	551	
	31.5	30.99	58	106825	650	0.4662	191	580	463	793	142	431	344	589	131	396	316	542	
	35.5	35.54	51	104740	556	0.2807	178	525	463	718	132	390	344	533	121	358	316	490	
	40	39.61	45	104740	498	0.2743	174	500	463	684	129	371	344	508	119	341	316	467	
	45	43.16	42	104740	457	0.2710	173	492	463	674	128	365	344	501	118	336	316	460	
	50	51.03	35	104740	387	0.1511	171	431	463	628	127	320	344	467	117	294	316	429	
	56	56.88	32	104740	347	0.1480	171	412	463	626	127	306	344	465	117	281	316	428	
	63	61.97	29	104740	319	0.1464	171	405	463	626	127	301	344	465	117	277	316	428	
	71	70.50	26	102677	275	0.1423	171	397	463	626	127	295	344	465	117	271	316	428	
	80	79.28	23	104740	249	0.1210	122	370	325	506	91	275	241	376	83	253	222	346	
	90	88.37	20	102677	219	0.1197	120	351	325	480	89	261	241	357	82	240	222	328	
	100	96.28	19	102677	201	0.1190	120	344	325	471	89	255	241	350	82	235	222	321	
	112	113.83	16	102677	170	0.0655	120	326	325	447	89	242	241	332	82	223	222	305	
	125	126.89	14	102677	153	0.0649	120	311	325	425	89	231	241	316	82	212	222	290	
	140	138.24	13	102677	140	0.0646	120	304	325	416	89	226	241	309	82	208	222	284	E4B (x4)
	160	158.55	11	100633	120	0.0378	120	280	325	383	89	208	241	284	82	191	222	261	
	180	176.74	10	102677	109	0.0375	120	267	325	366	89	199	241	272	82	183	222	250	
	200	192.55	9	102677	101	0.0373	120	262	325	358	89	194	241	266	82	179	222	244	
	224	227.67	8	100633	83	0.0203	120	233	325	322	89	172	241	235	82	158	222	216	
	250	253.78	7	102677	76	0.0201	120	233	325	322	89	164	241	225	82	151	222	207	
	280	276.48	7	102677	70	0.0201	120	233	325	322	89	161	241	220	82	148	222	202	
	315	314.54	6	98611	59	0.0199	120	233	325	322	89	152	241	208	82	140	222	191	

For tunnel bell housings with an integrated fan, please refer to the calculation method presented on page 25.
Dimensions of motor bell housing are shown in page 272.

E3B / E4B ..43 — SPLIT HOUSING — 50 Hz — 130 kNm

	i_N	i_{eff}	n_2 [rpm]	T_{2N} [Nm]	P_N [kW]	J [Kgm²]	R1 P_{t0} [kW]	R1	R1 H_2O	R1 +H_2O	S5 P_{t0} [kW]	S5	S5 H_2O	S5 +H_2O	T6 P_{t0} [kW]	T6	T6 H_2O	T6 +H_2O	Type
n_1 = 1000 rpm	**10**	9.84	102	85315	908	1.0055	269	540	535	807	200	401	398	600	183	369	366	551	
	11.2	11.19	89	96477	903	0.9510	269	540	535	807	200	401	398	600	183	369	366	551	
	12.5	12.19	82	105248	904	0.9208	269	540	535	807	200	401	398	600	183	369	366	551	
	14	13.99	71	120397	901	0.8795	269	540	535	807	200	401	398	600	183	369	366	551	
	16	15.92	63	130357	857	0.8483	269	540	535	807	200	401	398	600	183	369	366	551	
	18	17.53	57	130357	779	0.8287	269	540	535	807	200	401	398	600	183	369	366	551	
	20	20.04	50	112000	585	0.9400	279	560	555	837	207	416	413	622	190	383	379	572	
	22.4	22.34	45	118005	553	0.9119	266	535	530	799	198	397	394	594	182	365	362	546	
	25	24.33	41	113221	487	0.8975	261	525	521	785	194	390	387	583	178	359	356	536	**E3B** x3
	28	28.77	35	103600	377	0.4906	241	484	486	724	179	360	361	538	165	331	332	494	
	31.5	32.07	31	113867	372	0.4770	232	466	478	696	172	346	355	517	158	318	327	475	
	35.5	34.94	29	113221	339	0.4700	229	460	476	687	170	342	354	510	156	314	325	469	
	40	40.07	25	108267	283	0.2836	205	412	463	615	152	306	344	457	140	281	316	420	
	45	44.67	22	118005	277	0.2766	198	398	463	594	147	295	344	441	135	272	316	406	
	50	48.67	21	114019	245	0.2730	195	392	463	590	145	291	344	438	133	268	316	403	
	56	57.54	17	109200	199	0.1525	178	339	463	547	132	252	344	406	121	232	316	374	
	63	64.14	16	118803	194	0.1491	175	328	463	540	130	244	344	401	120	224	316	369	
	71	69.88	14	114019	171	0.1474	174	324	463	540	130	241	344	401	119	221	316	369	
	80	79.50	13	118803	156	0.1430	173	321	463	540	129	239	344	401	118	219	316	369	
	90	89.40	11	118803	139	0.1215	149	299	325	446	110	222	241	332	101	204	222	305	
	100	99.65	10	118803	125	0.1201	142	285	325	425	105	212	241	316	97	194	222	291	
	112	108.57	9	114019	110	0.1194	138	278	325	416	103	207	241	309	95	190	222	284	
	125	128.36	8	118803	97	0.0658	131	263	325	393	97	195	241	292	89	180	222	268	
	140	143.09	7	118803	87	0.0651	125	251	325	375	93	186	241	279	85	171	222	256	
	160	155.89	6	114019	77	0.0648	122	245	325	366	91	182	241	272	83	168	222	250	**E4B** x4
	180	178.79	6	118803	70	0.0380	120	226	325	337	89	168	241	250	82	154	222	230	
	200	199.30	5	118803	62	0.0376	120	216	325	322	89	160	241	239	82	147	222	220	
	224	217.13	5	114019	55	0.0374	120	211	325	315	89	156	241	234	82	144	222	215	
	250	256.73	4	118803	48	0.0204	120	188	325	280	89	139	241	208	82	128	222	191	
	280	286.18	3	118803	43	0.0202	120	180	325	278	89	133	241	199	82	123	222	183	
	315	311.78	3	114019	38	0.0201	120	175	325	278	89	130	241	194	82	120	222	179	
	355	354.69	3	118803	35	0.0199	120	173	325	278	89	126	241	188	82	116	222	173	

For tunnel bell housings with an integrated fan, please refer to the calculation method presented on page 25.
Dimensions of motor bell housing are shown in page 272.

E3B / E4B ..43 — SPLIT HOUSING — 50 Hz — 130 kNm

	i_N	i_{eff}	n_2 [rpm]	T_{2N} [Nm]	P_N [kW]	J [Kgm²]	R1 P_{t0} [kW]	R1	R1 H_2O	R1 $+H_2O$	S5 P_{t0} [kW]	S5	S5 H_2O	S5 $+H_2O$	T6 P_{t0} [kW]	T6	T6 H_2O	T6 $+H_2O$	Type
n_1 = 1500 rpm	**10**	9.84	152	85315	1361	1.0055	260	746	517	1004	193	554	384	746	177	509	353	685	
	11.2	11.19	134	96477	1355	0.9510	260	746	517	1004	193	554	384	746	177	509	353	685	
	12.5	12.19	123	105248	1357	0.9208	260	746	517	1004	193	554	384	746	177	509	353	685	
	14	13.99	107	120397	1352	0.8795	260	746	517	1004	193	554	384	746	177	509	353	685	
	16	15.92	94	130357	1286	0.8483	260	746	517	1004	193	554	384	746	177	509	353	685	
	18	17.53	86	130357	1168	0.8287	260	746	517	1004	193	554	384	746	177	509	353	685	
	20	20.04	75	112000	878	0.9400	270	775	538	1043	200	576	400	775	184	529	367	712	
	22.4	22.34	67	118005	830	0.9119	257	739	513	994	191	549	381	739	176	505	350	679	
	25	24.33	62	113221	731	0.8975	252	723	502	973	187	537	373	723	172	494	343	665	**E3B** (x3)
	28	28.77	52	103600	566	0.4906	233	668	477	900	173	497	354	668	159	457	325	614	
	31.5	32.07	47	113867	558	0.4770	223	642	468	864	166	477	348	642	153	438	320	590	
	35.5	34.94	43	113221	509	0.4700	220	631	466	850	163	469	346	631	150	431	318	580	
	40	40.07	37	108267	424	0.2836	198	569	463	765	147	422	344	569	135	388	316	523	
	45	44.67	34	118005	415	0.2766	191	548	463	737	142	407	344	548	130	374	316	503	
	50	48.67	31	114019	368	0.2730	187	538	463	724	139	399	344	538	128	367	316	494	
	56	57.54	26	109200	298	0.1525	173	467	463	651	128	347	344	484	118	319	316	445	
	63	64.14	23	118803	291	0.1491	171	450	463	640	127	335	344	476	117	308	316	437	
	71	69.88	21	114019	256	0.1474	171	443	463	636	127	329	344	473	117	302	316	435	
	80	79.50	19	118803	235	0.1430	171	438	463	632	127	325	344	469	117	299	316	431	
	90	89.40	17	118803	209	0.1215	142	408	325	549	106	303	241	408	97	279	222	375	
	100	99.65	15	118803	187	0.1201	135	388	325	523	100	289	241	388	92	265	222	357	
	112	108.57	14	114019	165	0.1194	132	379	325	510	98	282	241	379	90	259	222	348	
	125	128.36	12	118803	145	0.0658	126	361	325	485	93	268	241	361	86	246	222	331	
	140	143.09	10	118803	130	0.0651	120	343	325	462	89	255	241	343	82	235	222	316	
	160	155.89	10	114019	115	0.0648	120	335	325	451	89	249	241	335	82	229	222	308	**E4B** (x4)
	180	178.79	8	118803	104	0.0380	120	310	325	417	89	230	241	310	82	211	222	285	
	200	199.30	8	118803	94	0.0376	120	295	325	397	89	219	241	295	82	202	222	271	
	224	217.13	7	114019	82	0.0374	120	287	325	387	89	214	241	287	82	196	222	264	
	250	256.73	6	118803	73	0.0204	120	256	325	345	89	190	241	256	82	175	222	235	
	280	286.18	5	118803	65	0.0202	120	244	325	329	89	182	241	244	82	167	222	225	
	315	311.78	5	114019	57	0.0201	120	238	325	322	89	176	241	238	82	162	222	218	
	355	354.69	4	118803	53	0.0199	120	233	325	322	89	170	241	229	82	156	222	211	

For tunnel bell housings with an integrated fan, please refer to the calculation method presented on page 25.
Dimensions of motor bell housing are shown in page 272.

E3B / E4B ..43 — SPLIT HOUSING — 60 Hz — 130 kNm

	i_N	i_{eff}	n_2 [rpm]	T_{2N} [Nm]	P_N [kW]	J [Kgm²]	R1 P_{t0} [kW]	R1	R1 H_2O	R1 +H_2O	S5 P_{t0} [kW]	S5	S5 H_2O	S5 +H_2O	T6 P_{t0} [kW]	T6	T6 H_2O	T6 +H_2O	Type
n_1 = 1200 rpm	**10**	9.84	122	85315	1089	1.0055	264	623	527	886	196	463	392	658	181	425	360	605	E3B x3
	11.2	11.19	107	96477	1084	0.9510	264	623	527	886	196	463	392	658	181	425	360	605	
	12.5	12.19	98	105248	1085	0.9208	264	623	527	886	196	463	392	658	181	425	360	605	
	14	13.99	86	120397	1082	0.8795	264	623	527	886	196	463	392	658	181	425	360	605	
	16	15.92	75	130357	1029	0.8483	264	623	527	886	196	463	392	658	181	425	360	605	
	18	17.53	68	130357	934	0.8287	264	623	527	886	196	463	392	658	181	425	360	605	
	20	20.04	60	112000	702	0.9400	275	647	547	920	204	481	407	683	188	442	374	628	
	22.4	22.34	54	118005	664	0.9119	262	617	522	877	195	458	388	652	179	421	357	599	
	25	24.33	49	113221	585	0.8975	257	605	512	860	191	450	380	639	175	413	350	588	
	28	28.77	42	103600	452	0.4906	237	559	482	794	176	415	358	590	162	382	329	543	
	31.5	32.07	37	113867	446	0.4770	228	537	474	763	169	399	352	567	156	367	323	521	
	35.5	34.94	34	113221	407	0.4700	225	529	471	752	167	393	350	559	153	361	322	514	
	40	40.07	30	108267	339	0.2836	202	475	463	676	150	353	344	502	138	325	316	461	
	45	44.67	27	118005	332	0.2766	195	458	463	652	145	340	344	484	133	313	316	445	
	50	48.67	25	114019	294	0.2730	191	451	463	641	142	335	344	476	131	308	316	438	
	56	57.54	21	109200	238	0.1525	175	391	463	571	130	290	344	424	120	267	316	390	
	63	64.14	19	118803	233	0.1491	173	377	463	562	128	280	344	417	118	258	316	384	
	71	69.88	17	114019	205	0.1474	172	372	463	559	128	276	344	416	117	254	316	382	
	80	79.50	15	118803	188	0.1430	171	368	463	556	127	274	344	413	117	252	316	380	
	90	89.40	13	118803	167	0.1215	146	343	325	488	108	255	241	362	99	234	222	333	E4B x4
	100	99.65	12	118803	150	0.1201	139	327	325	465	103	243	241	345	95	223	222	317	
	112	108.57	11	114019	132	0.1194	135	319	325	454	101	237	241	337	93	218	222	310	
	125	128.36	9	118803	116	0.0658	129	303	325	430	95	225	241	320	88	207	222	294	
	140	143.09	8	118803	104	0.0651	123	289	325	410	91	214	241	305	84	197	222	280	
	160	155.89	8	114019	92	0.0648	120	282	325	401	89	209	241	298	82	192	222	274	
	180	178.79	7	118803	83	0.0380	120	260	325	369	89	193	241	274	82	177	222	252	
	200	199.30	6	118803	75	0.0376	120	248	325	352	89	184	241	262	82	169	222	241	
	224	217.13	6	114019	66	0.0374	120	242	325	344	89	180	241	255	82	165	222	235	
	250	256.73	5	118803	58	0.0204	120	215	325	306	89	160	241	227	82	147	222	209	
	280	286.18	4	118803	52	0.0202	120	206	325	293	89	153	241	217	82	141	222	200	
	315	311.78	4	114019	46	0.0201	120	200	325	285	89	149	241	212	82	137	222	195	
	355	354.69	3	118803	42	0.0199	120	193	325	278	89	144	241	204	82	132	222	188	

For tunnel bell housings with an integrated fan, please refer to the calculation method presented on page 25.
Dimensions of motor bell housing are shown in page 272.

E3B / E4B ..43 SPLIT HOUSING 60 Hz 130 kNm

n_1 = 1800 rpm

i_N	i_{eff}	n_2 [rpm]	T_{2N} [Nm]	P_N [kW]	J [Kgm²]	R1 P_{t0} [kW]	R1	R1 H_2O	R1 $+H_2O$	S5 P_{t0} [kW]	S5	S5 H_2O	S5 $+H_2O$	T6 P_{t0} [kW]	T6	T6 H_2O	T6 $+H_2O$	Type
10	9.84	183	85315	1634	1.0055	254	775	507	1028	189	576	377	764	174	529	346	702	
11.2	11.19	161	96477	1626	0.9510	254	775	507	1028	189	576	377	764	174	529	346	702	
12.5	12.19	148	105248	1628	0.9208	254	775	507	1028	189	576	377	764	174	529	346	702	
14	13.99	129	120397	1622	0.8795	254	775	507	1028	189	576	377	764	174	529	346	702	
16	15.92	113	130357	1543	0.8483	254	775	507	1028	189	576	377	764	174	529	346	702	
18	17.53	103	130357	1401	0.8287	254	775	507	1028	189	576	377	764	174	529	346	702	
20	20.04	90	112000	1054	0.9400	264	805	527	1068	196	598	392	794	181	550	360	730	
22.4	22.34	81	118005	996	0.9119	252	768	503	1019	187	571	374	757	172	525	343	696	
25	24.33	74	113221	877	0.8975	247	751	492	996	183	558	365	740	168	513	336	680	**E3B**
28	28.77	63	103600	679	0.4906	229	697	472	924	170	518	351	687	156	476	323	631	x3
31.5	32.07	56	113867	669	0.4770	220	669	464	888	163	497	345	660	150	457	317	606	
35.5	34.94	52	113221	611	0.4700	216	657	463	872	160	488	344	648	147	449	316	595	
40	40.07	45	108267	509	0.2836	195	593	463	786	145	440	344	584	133	405	316	537	
45	44.67	40	118005	498	0.2766	187	571	463	757	139	424	344	562	128	390	316	517	
50	48.67	37	114019	442	0.2730	184	559	463	741	137	415	344	551	126	382	316	506	
56	57.54	31	109200	358	0.1525	171	486	463	658	127	361	344	489	117	332	316	450	
63	64.14	28	118803	349	0.1491	171	469	463	646	127	348	344	480	117	320	316	442	
71	69.88	26	114019	308	0.1474	171	460	463	642	127	341	344	477	117	314	316	438	
80	79.50	23	118803	282	0.1430	171	454	463	636	127	337	344	473	117	310	316	435	
90	89.40	20	118803	250	0.1215	139	424	325	563	103	315	241	418	95	290	222	384	
100	99.65	18	118803	225	0.1201	132	403	325	535	98	300	241	398	90	276	222	365	
112	108.57	17	114019	198	0.1194	129	393	325	521	96	292	241	387	88	268	222	356	
125	128.36	14	118803	174	0.0658	123	375	325	497	91	278	241	369	84	256	222	339	
140	143.09	13	118803	156	0.0651	120	357	325	473	89	265	241	351	82	244	222	323	
160	155.89	12	114019	138	0.0648	120	347	325	460	89	258	241	342	82	237	222	315	**E4B**
180	178.79	10	118803	125	0.0380	120	322	325	427	89	239	241	317	82	220	222	292	x4
200	199.30	9	118803	112	0.0376	120	307	325	407	89	228	241	302	82	209	222	278	
224	217.13	8	114019	99	0.0374	120	298	325	395	89	222	241	294	82	204	222	270	
250	256.73	7	118803	87	0.0204	120	266	325	353	89	198	241	262	82	182	222	241	
280	286.18	6	118803	78	0.0202	120	254	325	336	89	189	241	250	82	173	222	230	
315	311.78	6	114019	69	0.0201	120	246	325	327	89	183	241	243	82	168	222	223	
355	354.69	5	118803	63	0.0199	120	237	325	322	89	176	241	234	82	162	222	215	

For tunnel bell housings with an integrated fan, please refer to the calculation method presented on page 25.
Dimensions of motor bell housing are shown in page 272.

E3B / E4B ..45 — SPLIT HOUSING — 50 Hz — 135 kNm

	i_N	i_{eff}	n_2 [rpm]	T_{2N} [Nm]	P_N [kW]	J [Kgm²]	R1 P_{t0} [kW]	R1	R1 H_2O	R1 +H_2O	S5 P_{t0} [kW]	S5	S5 H_2O	S5 +H_2O	T6 P_{t0} [kW]	T6	T6 H_2O	T6 +H_2O	Type
n_1 = 1000 rpm	**11.2**	10.77	93	93473	909	1.1459	288	582	639	933	214	432	475	693	197	397	437	637	
	12.5	12.24	82	106430	910	1.1202	288	582	639	933	214	432	475	693	197	397	437	637	
	14	13.34	75	115685	908	1.1143	288	582	639	933	214	432	475	693	197	397	437	637	
	16	15.31	65	132343	905	1.0650	288	582	639	933	214	432	475	693	197	397	437	637	
	18	17.42	57	132343	795	1.0213	288	582	639	933	214	432	475	693	197	397	437	637	
	20	19.19	52	132343	722	0.9960	288	582	639	933	214	432	475	693	197	397	437	637	
	22.4	21.93	46	134814	644	0.9531	296	598	657	959	220	444	488	712	202	408	448	655	
	25	24.44	41	134814	578	0.9224	285	576	633	923	212	428	470	686	195	394	432	631	
	28	26.63	38	134814	530	0.9064	283	571	629	916	210	424	467	680	193	390	429	625	**E3B** x3
	31.5	31.49	32	134814	448	0.4970	265	535	609	858	197	398	453	638	181	366	416	586	
	35.5	35.10	28	134814	402	0.4821	253	511	598	820	188	380	444	609	173	349	408	560	
	40	38.24	26	134814	369	0.4743	250	505	597	810	186	375	444	602	171	345	408	553	
	45	43.86	23	132158	316	0.2869	225	455	597	737	167	338	444	548	154	311	408	504	
	50	48.89	20	132158	283	0.2792	220	436	597	724	163	324	444	538	150	298	408	494	
	56	53.26	19	132158	260	0.2752	219	432	597	722	163	321	444	536	150	295	408	493	
	63	62.97	16	132158	220	0.1541	206	375	597	690	153	279	444	513	141	256	408	471	
	71	70.19	14	132158	197	0.1504	206	361	597	690	153	268	444	513	141	247	408	471	
	80	76.47	13	132158	181	0.1485	206	357	597	690	153	266	444	513	141	244	408	471	
	90	87.00	11	132158	159	0.1438	206	353	597	690	153	262	444	513	141	241	408	471	
	100	97.83	10	132158	141	0.1222	162	326	418	523	120	242	311	389	110	223	285	357	
	112	109.05	9	132158	127	0.1207	154	311	418	499	114	231	311	370	105	212	285	341	
	125	118.81	8	129528	114	0.1199	151	305	418	489	112	227	311	363	103	208	285	334	
	140	140.47	7	129528	97	0.0661	144	286	418	459	107	213	311	341	98	196	285	313	
	160	156.59	6	129528	87	0.0654	144	273	418	438	107	203	311	325	98	187	285	299	
	180	170.60	6	129528	80	0.0650	144	268	418	430	107	199	311	320	98	183	285	294	**E4B** x4
	200	195.66	5	129528	69	0.0381	144	245	418	392	107	182	311	292	98	167	285	268	
	224	218.11	5	129528	62	0.0378	144	234	418	375	107	174	311	279	98	160	285	256	
	250	237.62	4	129528	57	0.0376	144	230	418	368	107	171	311	274	98	157	285	252	
	280	280.95	4	133269	50	0.0205	144	209	418	355	107	152	311	243	98	139	285	223	
	315	313.18	3	129528	43	0.0203	144	209	418	355	107	145	311	232	98	133	285	213	
	355	341.19	3	124939	38	0.0202	144	209	418	355	107	141	311	226	98	130	285	208	
	400	388.15	3	129528	35	0.0199	144	209	418	355	107	136	311	219	98	125	285	201	

For tunnel bell housings with an integrated fan, please refer to the calculation method presented on page 25.
Dimensions of motor bell housing are shown in page 272.

E3B / E4B ..45 — SPLIT HOUSING — 50 Hz — 135 kNm

n_1 = 1500 rpm

i_N	i_{eff}	n_2 [rpm]	T_{2N} [Nm]	P_N [kW]	J [Kgm²]	R1 P_{t0} [kW]	R1	R1 H_2O	R1 $+H_2O$	S5 P_{t0} [kW]	S5	S5 H_2O	S5 $+H_2O$	T6 P_{t0} [kW]	T6	T6 H_2O	T6 $+H_2O$	Type
11.2	10.77	139	93473	1363	1.1459	277	798	620	1135	206	593	461	843	189	545	424	775	
12.5	12.24	123	106430	1366	1.1202	277	798	620	1135	206	593	461	843	189	545	424	775	
14	13.34	112	115685	1363	1.1143	277	798	620	1135	206	593	461	843	189	545	424	775	
16	15.31	98	132343	1358	1.0650	277	798	620	1135	206	593	461	843	189	545	424	775	
18	17.42	86	132343	1193	1.0213	277	798	620	1135	206	593	461	843	189	545	424	775	
20	19.19	78	132343	1083	0.9960	277	798	620	1135	206	593	461	843	189	545	424	775	
22.4	21.93	68	134814	966	0.9531	284	820	630	1165	211	609	468	866	194	560	430	796	
25	24.44	61	134814	866	0.9224	274	791	616	1125	204	588	458	836	187	540	421	768	
28	26.63	56	134814	795	0.9064	272	784	615	1116	202	583	457	829	186	536	420	762	**E3B** (x3)
31.5	31.49	48	134814	673	0.4970	257	742	599	1055	191	551	445	784	176	507	409	720	
35.5	35.10	43	134814	603	0.4821	245	705	597	1003	182	524	444	745	167	482	408	685	
40	38.24	39	134814	554	0.4743	241	695	597	988	179	516	444	734	165	475	408	675	
45	43.86	34	132158	473	0.2869	219	630	597	895	163	468	444	665	150	430	408	612	
50	48.89	31	132158	425	0.2792	215	601	597	855	160	447	444	635	147	411	408	584	
56	53.26	28	132158	390	0.2752	214	593	597	851	159	441	444	632	146	405	408	581	
63	62.97	24	132158	330	0.1541	206	518	597	793	153	385	444	589	141	354	408	542	
71	70.19	21	132158	296	0.1504	206	496	597	793	153	369	444	589	141	339	408	542	
80	76.47	20	132158	271	0.1485	206	489	597	793	153	364	444	589	141	334	408	542	
90	87.00	17	132158	239	0.1438	206	481	597	793	153	357	444	589	141	329	408	542	
100	97.83	15	132158	212	0.1222	155	446	418	634	115	331	311	471	106	305	285	433	
112	109.05	14	132158	190	0.1207	147	425	418	604	109	316	311	449	101	290	285	412	
125	118.81	13	129528	171	0.1199	144	416	418	591	107	309	311	439	99	284	285	404	
140	140.47	11	129528	145	0.0661	144	393	418	559	107	292	311	415	98	268	285	382	
160	156.59	10	129528	130	0.0654	144	374	418	533	107	278	311	396	98	256	285	364	
180	170.60	9	129528	119	0.0650	144	367	418	522	107	273	311	388	98	251	285	357	**E4B** (x4)
200	195.66	8	129528	104	0.0381	144	337	418	479	107	250	311	356	98	230	285	327	
224	218.11	7	129528	93	0.0378	144	321	418	457	107	239	311	340	98	220	285	312	
250	237.62	6	129528	86	0.0376	144	315	418	448	107	234	311	333	98	215	285	306	
280	280.95	5	133269	75	0.0205	144	281	418	408	107	208	311	295	98	191	285	272	
315	313.18	5	129528	65	0.0203	144	281	418	408	107	198	311	281	98	182	285	258	
355	341.19	4	124939	58	0.0202	144	281	418	408	107	192	311	273	98	177	285	251	
400	388.15	4	129528	52	0.0199	144	281	418	408	107	185	311	263	98	170	285	242	

For tunnel bell housings with an integrated fan, please refer to the calculation method presented on page 25.
Dimensions of motor bell housing are shown in page 272.

E3B / E4B ..45 — SPLIT HOUSING — 60 Hz — 135 kNm

	i_N	i_{eff}	n_2 [rpm]	T_{2N} [Nm]	P_N [kW]	J [Kgm²]	R1 P_{t0} [kW]	R1	R1 H_2O	R1 $+H_2O$	S5 P_{t0} [kW]	S5	S5 H_2O	S5 $+H_2O$	T6 P_{t0} [kW]	T6	T6 H_2O	T6 $+H_2O$	Type
n_1 = 1200 rpm	**11.2**	10.77	111	93473	1090	1.1459	283	669	630	1014	210	497	468	753	193	457	430	692	
	12.5	12.24	98	106430	1093	1.1202	283	669	630	1014	210	497	468	753	193	457	430	692	
	14	13.34	90	115685	1090	1.1143	283	669	630	1014	210	497	468	753	193	457	430	692	
	16	15.31	78	132343	1086	1.0650	283	669	630	1014	210	497	468	753	193	457	430	692	
	18	17.42	69	132343	954	1.0213	283	669	630	1014	210	497	468	753	193	457	430	692	
	20	19.19	63	132343	867	0.9960	283	669	630	1014	210	497	468	753	193	457	430	692	
	22.4	21.93	55	134814	773	0.9531	291	688	645	1042	216	511	479	774	199	470	440	712	
	25	24.44	49	134814	693	0.9224	280	663	623	1004	208	493	463	746	191	453	426	686	
	28	26.63	45	134814	636	0.9064	278	657	622	995	206	488	462	740	190	449	425	680	**E3B** x3
	31.5	31.49	38	134814	538	0.4970	261	619	604	937	194	460	449	696	179	422	413	640	
	35.5	35.10	34	134814	483	0.4821	249	589	597	893	185	438	444	663	170	403	408	610	
	40	38.24	31	134814	443	0.4743	246	582	597	881	183	432	444	655	168	397	408	602	
	45	43.86	27	132158	379	0.2869	222	525	597	795	165	390	444	591	152	359	408	543	
	50	48.89	25	132158	340	0.2792	218	503	597	761	162	374	444	566	149	343	408	520	
	56	53.26	23	132158	312	0.2752	217	497	597	752	161	369	444	559	148	339	408	514	
	63	62.97	19	132158	264	0.1541	206	433	597	700	153	321	444	520	141	295	408	478	
	71	70.19	17	132158	237	0.1504	206	415	597	690	153	309	444	513	141	284	408	471	
	80	76.47	16	132158	217	0.1485	206	411	597	690	153	305	444	513	141	280	408	471	
	90	87.00	14	132158	191	0.1438	206	405	597	690	153	301	444	513	141	277	408	471	
	100	97.83	12	132158	170	0.1222	158	375	418	568	118	279	311	422	108	256	285	388	
	112	109.05	11	132158	152	0.1207	151	357	418	541	112	265	311	402	103	244	285	369	
	125	118.81	10	129528	137	0.1199	148	350	418	530	110	260	311	394	101	239	285	362	
	140	140.47	9	129528	116	0.0661	144	330	418	500	107	245	311	371	98	225	285	341	
	160	156.59	8	129528	104	0.0654	144	314	418	476	107	234	311	354	98	215	285	325	
	180	170.60	7	129528	95	0.0650	144	309	418	467	107	229	311	347	98	211	285	319	**E4B** x4
	200	195.66	6	129528	83	0.0381	144	282	418	428	107	210	311	318	98	193	285	292	
	224	218.11	6	129528	75	0.0378	144	270	418	408	107	200	311	303	98	184	285	279	
	250	237.62	5	129528	68	0.0376	144	264	418	401	107	197	311	298	98	181	285	274	
	280	280.95	4	133269	60	0.0205	144	234	418	357	107	174	311	264	98	160	285	243	
	315	313.18	4	129528	52	0.0203	144	223	418	355	107	166	311	251	98	153	285	231	
	355	341.19	4	124939	46	0.0202	144	218	418	355	107	162	311	245	98	149	285	225	
	400	388.15	3	129528	42	0.0199	144	210	418	355	107	156	311	236	98	143	285	217	

For tunnel bell housings with an integrated fan, please refer to the calculation method presented on page 25.
Dimensions of motor bell housing are shown in page 272.

E3B / E4B ..45 — SPLIT HOUSING — 60 Hz — 135 kNm

	i_N	i_{eff}	n_2 [rpm]	T_{2N} [Nm]	P_N [kW]	J [Kgm²]	R1 P_{t0} [kW]	R1	R1 H_2O	R1 $+H_2O$	S5 P_{t0} [kW]	S5	S5 H_2O	S5 $+H_2O$	T6 P_{t0} [kW]	T6	T6 H_2O	T6 $+H_2O$	Type
n_1 = 1800 rpm	**11.2**	10.77	167	93473	1636	1.1459	270	827	611	1156	201	614	454	859	185	565	417	790	
	12.5	12.24	147	106430	1639	1.1202	270	827	611	1156	201	614	454	859	185	565	417	790	
	14	13.34	135	115685	1635	1.1143	270	827	611	1156	201	614	454	859	185	565	417	790	
	16	15.31	118	132343	1630	1.0650	270	827	611	1156	201	614	454	859	185	565	417	790	
	18	17.42	103	132343	1432	1.0213	270	827	611	1156	201	614	454	859	185	565	417	790	
	20	19.19	94	132343	1300	0.9960	270	827	611	1156	201	614	454	859	185	565	417	790	
	22.4	21.93	82	134814	1159	0.9531	277	848	616	1185	206	630	458	880	189	579	421	809	
	25	24.44	74	134814	1040	0.9224	268	820	609	1146	199	609	452	851	183	560	416	783	
	28	26.63	68	134814	954	0.9064	266	814	608	1138	198	605	452	845	182	556	416	777	**E3B** (x3)
	31.5	31.49	57	134814	807	0.4970	253	775	597	1084	188	576	444	805	173	529	408	740	
	35.5	35.10	51	134814	724	0.4821	241	736	597	1029	179	547	444	765	164	503	408	703	
	40	38.24	47	134814	665	0.4743	237	724	597	1013	176	538	444	752	162	495	408	692	
	45	43.86	41	132158	568	0.2869	217	658	597	919	162	489	444	683	149	449	408	628	
	50	48.89	37	132158	510	0.2792	213	627	597	876	158	466	444	651	145	428	408	598	
	56	53.26	34	132158	468	0.2752	211	617	597	863	157	459	444	641	144	422	408	589	
	63	62.97	29	132158	396	0.1541	206	540	597	800	153	401	444	595	141	369	408	547	
	71	70.19	26	132158	355	0.1504	206	516	597	793	153	384	444	589	141	353	408	542	
	80	76.47	24	132158	326	0.1485	206	508	597	793	153	378	444	589	141	347	408	542	
	90	87.00	21	132158	286	0.1438	206	499	597	793	153	371	444	589	141	341	408	542	
	100	97.83	18	132158	255	0.1222	152	463	418	648	113	344	311	481	104	317	285	443	
	112	109.05	17	132158	228	0.1207	145	441	418	616	107	328	311	458	99	301	285	421	
	125	118.81	15	129528	205	0.1199	144	431	418	603	107	320	311	448	98	294	285	412	
	140	140.47	13	129528	174	0.0661	144	408	418	571	107	303	311	424	98	279	285	390	
	160	156.59	11	129528	156	0.0654	144	389	418	544	107	289	311	404	98	266	285	371	
	180	170.60	11	129528	143	0.0650	144	381	418	533	107	283	311	396	98	260	285	364	**E4B** (x4)
	200	195.66	9	129528	125	0.0381	144	351	418	490	107	261	311	364	98	240	285	335	
	224	218.11	8	129528	112	0.0378	144	334	418	467	107	248	311	347	98	228	285	319	
	250	237.62	8	129528	103	0.0376	144	327	418	458	107	243	311	340	98	224	285	313	
	280	280.95	6	133269	89	0.0205	144	291	418	408	107	216	311	302	98	199	285	278	
	315	313.18	6	129528	78	0.0203	144	281	418	408	107	205	311	287	98	189	285	264	
	355	341.19	5	124939	69	0.0202	144	281	418	408	107	199	311	279	98	183	285	256	
	400	388.15	5	129528	63	0.0199	144	281	418	408	107	192	311	269	98	177	285	247	

For tunnel bell housings with an integrated fan, please refer to the calculation method presented on page 25.
Dimensions of motor bell housing are shown in page 272.

E3B / E4B ..47 — SPLIT HOUSING — 50 Hz — 175 kNm

	i_N	i_{eff}	n_2 [rpm]	T_{2N} [Nm]	P_N [kW]	J [Kgm²]	R1 P_{t0} [kW]	R1	R1 H_2O	R1 $+H_2O$	S5 P_{t0} [kW]	S5	S5 H_2O	S5 $+H_2O$	T6 P_{t0} [kW]	T6	T6 H_2O	T6 $+H_2O$	Type
n_1 = 1000 rpm	**14**	13.37	75	88400	692	1.7576	365	744	730	1109	271	553	542	824	249	508	498	757	
	16	15.19	66	100533	693	1.5245	365	744	730	1109	271	553	542	824	249	508	498	757	
	18	16.56	60	110067	696	1.3813	365	744	730	1109	271	553	542	824	249	508	498	757	
	20	19.00	53	125667	693	1.2400	365	744	730	1109	271	553	542	824	249	508	498	757	
	22.4	21.63	46	143000	692	1.1291	365	744	730	1109	271	553	542	824	249	508	498	757	
	25	23.82	42	157733	693	1.0574	365	744	730	1109	271	553	542	824	249	508	498	757	
	28	27.22	37	174845	673	0.9920	379	773	758	1152	281	574	563	856	259	528	518	787	
	31.5	30.34	33	174845	603	0.9537	360	735	721	1095	268	546	536	814	246	502	492	748	
	35.5	33.06	30	167696	531	0.9328	355	724	710	1079	264	538	528	802	242	494	485	737	**E3B** x3
	40	39.09	26	171531	460	0.5159	329	671	669	1000	244	498	497	743	225	458	457	683	
	45	43.57	23	171531	412	0.4973	314	641	656	955	233	476	487	709	215	437	448	652	
	50	47.47	21	167696	370	0.4871	310	633	653	943	231	470	486	701	212	432	446	644	
	56	54.44	18	171531	330	0.2966	279	568	641	847	207	422	476	629	190	388	438	578	
	63	60.69	16	171531	296	0.2870	270	545	641	817	201	405	476	607	184	372	438	558	
	71	66.11	15	164997	261	0.2818	269	538	641	813	200	400	476	604	184	367	438	555	
	80	78.17	13	168248	225	0.1589	250	467	641	757	186	347	476	562	171	319	438	517	
	90	87.14	11	168248	202	0.1542	250	450	641	752	186	334	476	559	171	307	438	514	
	100	94.93	11	164997	182	0.1517	250	444	641	752	186	330	476	559	171	304	438	514	
	112	108.00	9	168248	163	0.1463	250	441	641	752	186	327	476	559	171	301	438	514	
	125	121.44	8	168248	145	0.1242	200	407	449	607	148	303	334	451	136	278	307	415	
	140	135.38	7	168248	130	0.1222	190	388	449	579	141	289	334	430	130	265	307	395	
	160	147.49	7	161777	115	0.1212	186	380	449	567	139	282	334	421	127	260	307	387	
	180	174.38	6	168248	101	0.0671	176	358	449	533	131	266	334	396	120	244	307	364	
	200	194.39	5	168248	91	0.0662	175	341	449	509	130	254	334	378	120	233	307	347	
	224	211.77	5	161777	80	0.0656	175	334	449	498	130	248	334	370	120	228	307	340	**E4B** x4
	250	242.89	4	164997	71	0.0386	175	305	449	455	130	227	334	338	120	208	307	310	
	280	270.75	4	164997	64	0.0381	175	292	449	435	130	217	334	323	120	199	307	297	
	315	294.97	3	158590	56	0.0379	175	285	449	425	130	212	334	316	120	195	307	290	
	355	348.76	3	164997	50	0.0207	175	254	449	377	130	188	334	280	120	173	307	257	
	400	388.77	3	164997	44	0.0205	175	253	449	366	130	180	334	268	120	165	307	247	
	450	423.55	2	158590	39	0.0203	175	253	449	366	130	176	334	262	120	161	307	241	
	500	481.85	2	174845	38	0.0201	175	253	449	366	130	171	334	255	120	157	307	235	

For tunnel bell housings with an integrated fan, please refer to the calculation method presented on page 25.
Dimensions of motor bell housing are shown in page 272.

E3B / E4B ..47 — SPLIT HOUSING — 50 Hz — 175 kNm

n_1 = 1500 rpm

i_N	i_{eff}	n_2 [rpm]	T_{2N} [Nm]	P_N [kW]	J [Kgm²]	R1 P_{t0} [kW]	R1	R1 H_2O	R1 $+H_2O$	S5 P_{t0} [kW]	S5	S5 H_2O	S5 $+H_2O$	T6 P_{t0} [kW]	T6	T6 H_2O	T6 $+H_2O$	Type
14	13.37	112	88400	1039	1.7576	353	1028	706	1381	262	763	524	1026	241	702	482	943	
16	15.19	99	100533	1040	1.5245	353	1028	706	1381	262	763	524	1026	241	702	482	943	
18	16.56	91	110067	1044	1.3813	353	1028	706	1381	262	763	524	1026	241	702	482	943	
20	19.00	79	125667	1039	1.2400	353	1028	706	1381	262	763	524	1026	241	702	482	943	
22.4	21.63	69	143000	1039	1.1291	353	1028	706	1381	262	763	524	1026	241	702	482	943	
25	23.82	63	157733	1040	1.0574	353	1028	706	1381	262	763	524	1026	241	702	482	943	
28	27.22	55	174845	1009	0.9920	367	1070	735	1438	273	795	546	1068	251	731	502	982	
31.5	30.34	49	174845	905	0.9537	349	1015	697	1364	259	754	518	1013	238	693	476	932	
35.5	33.06	45	167696	797	0.9328	342	997	685	1340	254	741	509	995	234	681	468	915	**E3B** (x3)
40	39.09	38	171531	689	0.5159	319	929	657	1248	237	690	488	928	218	635	449	853	
45	43.57	34	171531	618	0.4973	303	884	643	1187	225	656	478	882	207	603	439	811	
50	47.47	32	167696	555	0.4871	299	870	641	1168	222	646	476	868	204	594	438	798	
56	54.44	28	171531	495	0.2966	270	787	641	1057	201	584	476	785	184	537	438	722	
63	60.69	25	171531	444	0.2870	263	751	641	1009	196	558	476	750	180	513	438	689	
71	66.11	23	164997	392	0.2818	262	738	641	992	194	549	476	737	179	504	438	677	
80	78.17	19	168248	338	0.1589	250	645	641	905	186	479	476	672	171	440	438	618	
90	87.14	17	168248	303	0.1542	250	617	641	887	186	459	476	659	171	422	438	606	
100	94.93	16	164997	273	0.1517	250	608	641	881	186	452	476	655	171	415	438	602	
112	108.00	14	168248	245	0.1463	250	601	641	877	186	446	476	652	171	410	438	599	
125	121.44	12	168248	218	0.1242	191	557	449	748	142	414	334	556	131	380	307	511	
140	135.38	11	168248	195	0.1222	182	530	449	712	135	394	334	529	124	362	307	487	
160	147.49	10	161777	172	0.1212	178	518	449	696	132	385	334	517	121	354	307	475	
180	174.38	9	168248	152	0.0671	175	492	449	660	130	365	334	491	120	336	307	451	
200	194.39	8	168248	136	0.0662	175	468	449	629	130	348	334	467	120	320	307	430	
224	211.77	7	161777	120	0.0656	175	457	449	614	130	340	334	456	120	312	307	419	**E4B** (x4)
250	242.89	6	164997	107	0.0386	175	420	449	564	130	312	334	419	120	287	307	385	
280	270.75	6	164997	96	0.0381	175	401	449	538	130	298	334	400	120	274	307	368	
315	294.97	5	158590	84	0.0379	175	390	449	525	130	290	334	390	120	267	307	358	
355	348.76	4	164997	74	0.0207	175	346	449	465	130	257	334	346	120	237	307	318	
400	388.77	4	164997	67	0.0205	175	340	449	452	130	246	334	330	120	226	307	304	
450	423.55	4	158590	59	0.0203	175	340	449	452	130	239	334	321	120	220	307	295	
500	481.85	3	174845	57	0.0201	175	340	449	452	130	233	334	313	120	214	307	288	

For tunnel bell housings with an integrated fan, please refer to the calculation method presented on page 25.
Dimensions of motor bell housing are shown in page 272.

E3B / E4B ..47 — SPLIT HOUSING — 60 Hz — 175 kNm

	i_N	i_{eff}	n_2 [rpm]	T_{2N} [Nm]	P_N [kW]	J [Kgm²]	R1 P_{t0} [kW]	R1	R1 H_2O	R1 $+H_2O$	S5 P_{t0} [kW]	S5	S5 H_2O	S5 $+H_2O$	T6 P_{t0} [kW]	T6	T6 H_2O	T6 $+H_2O$	Type
n_1 = 1200 rpm	**14**	13.37	90	88400	831	1.7576	359	858	719	1217	267	638	534	905	245	586	491	832	
	16	15.19	79	100533	832	1.5245	359	858	719	1217	267	638	534	905	245	586	491	832	
	18	16.56	72	110067	835	1.3813	359	858	719	1217	267	638	534	905	245	586	491	832	
	20	19.00	63	125667	831	1.2400	359	858	719	1217	267	638	534	905	245	586	491	832	
	22.4	21.63	55	143000	831	1.1291	359	858	719	1217	267	638	534	905	245	586	491	832	
	25	23.82	50	157733	832	1.0574	359	858	719	1217	267	638	534	905	245	586	491	832	
	28	27.22	44	174845	807	0.9920	374	893	748	1266	278	663	555	941	255	610	511	865	
	31.5	30.34	40	174845	724	0.9537	355	848	710	1203	264	630	527	894	242	579	485	821	
	35.5	33.06	36	167696	637	0.9328	349	834	698	1183	259	620	519	879	238	570	477	808	**E3B** x3
	40	39.09	31	171531	551	0.5159	324	775	663	1100	241	576	493	817	222	529	453	751	
	45	43.57	28	171531	495	0.4973	309	738	650	1048	230	549	483	778	211	504	444	716	
	50	47.47	25	167696	444	0.4871	305	728	647	1033	227	541	481	768	208	497	442	706	
	56	54.44	22	171531	396	0.2966	275	656	641	931	204	488	476	692	188	448	438	636	
	63	60.69	20	171531	355	0.2870	267	628	641	891	198	467	476	662	182	429	438	609	
	71	66.11	18	164997	314	0.2818	265	619	641	878	197	460	476	653	181	423	438	600	
	80	78.17	15	168248	270	0.1589	250	539	641	791	186	400	476	587	171	368	438	540	
	90	87.14	14	168248	243	0.1542	250	517	641	776	186	384	476	577	171	353	438	530	
	100	94.93	13	164997	218	0.1517	250	510	641	772	186	379	476	574	171	349	438	527	
	112	108.00	11	168248	196	0.1463	250	505	641	768	186	376	476	571	171	345	438	525	
	125	121.44	10	168248	174	0.1242	196	468	449	664	146	348	334	494	134	320	307	454	
	140	135.38	9	168248	156	0.1222	187	446	449	633	139	331	334	470	128	305	307	432	
	160	147.49	8	161777	138	0.1212	183	436	449	619	136	324	334	460	125	298	307	423	
	180	174.38	7	168248	121	0.0671	175	412	449	585	130	306	334	435	120	282	307	400	
	200	194.39	6	168248	109	0.0662	175	393	449	558	130	292	334	414	120	268	307	381	
	224	211.77	6	161777	96	0.0656	175	384	449	545	130	285	334	405	120	262	307	372	**E4B** x4
	250	242.89	5	164997	85	0.0386	175	352	449	499	130	261	334	371	120	240	307	341	
	280	270.75	4	164997	77	0.0381	175	336	449	476	130	249	334	354	120	229	307	325	
	315	294.97	4	158590	68	0.0379	175	328	449	465	130	244	334	346	120	224	307	318	
	355	348.76	3	164997	59	0.0207	175	291	449	412	130	216	334	306	120	199	307	282	
	400	388.77	3	164997	53	0.0205	175	278	449	394	130	207	334	293	120	190	307	269	
	450	423.55	3	158590	47	0.0203	175	271	449	385	130	201	334	286	120	185	307	263	
	500	481.85	2	174845	46	0.0201	175	264	449	375	130	196	334	278	120	180	307	256	

For tunnel bell housings with an integrated fan, please refer to the calculation method presented on page 25.
Dimensions of motor bell housing are shown in page 272.

E3B / E4B ..47 — SPLIT HOUSING — 60 Hz — 175 kNm

n_1 = 1800 rpm

i_N	i_{eff}	n_2 [rpm]	T_{2N} [Nm]	P_N [kW]	J [Kgm²]	R1 P_{t0} [kW]	R1	R1 H_2O	R1 $+H_2O$	S5 P_{t0} [kW]	S5	S5 H_2O	S5 $+H_2O$	T6 P_{t0} [kW]	T6	T6 H_2O	T6 $+H_2O$	Type
14	13.37	135	88400	1246	1.7576	346	1068	693	1415	257	794	515	1051	236	730	473	966	
16	15.19	118	100533	1248	1.5245	346	1068	693	1415	257	794	515	1051	236	730	473	966	
18	16.56	109	110067	1253	1.3813	346	1068	693	1415	257	794	515	1051	236	730	473	966	
20	19.00	95	125667	1247	1.2400	346	1068	693	1415	257	794	515	1051	236	730	473	966	
22.4	21.63	83	143000	1246	1.1291	346	1068	693	1415	257	794	515	1051	236	730	473	966	
25	23.82	76	157733	1248	1.0574	346	1068	693	1415	257	794	515	1051	236	730	473	966	
28	27.22	66	174845	1211	0.9920	360	1113	721	1474	268	827	536	1095	246	760	493	1007	
31.5	30.34	59	174845	1086	0.9537	342	1056	684	1398	254	784	508	1039	234	721	467	955	
35.5	33.06	54	167696	956	0.9328	336	1036	673	1372	249	770	500	1019	229	708	460	937	**E3B** (x3)
40	39.09	46	171531	827	0.5159	314	971	652	1285	234	721	484	955	215	663	445	878	
45	43.57	41	171531	742	0.4973	299	922	641	1221	222	685	476	907	204	630	438	834	
50	47.47	38	167696	666	0.4871	293	906	641	1200	218	673	476	891	200	619	438	819	
56	54.44	33	171531	594	0.2966	267	821	641	1087	198	610	476	808	182	561	438	743	
63	60.69	30	171531	533	0.2870	261	782	641	1036	194	581	476	770	178	534	438	708	
71	66.11	27	164997	470	0.2818	259	768	641	1017	192	570	476	755	177	524	438	694	
80	78.17	23	168248	406	0.1589	250	672	641	915	186	499	476	680	171	459	438	625	
90	87.14	21	168248	364	0.1542	250	642	641	896	186	477	476	666	171	439	438	612	
100	94.93	19	164997	328	0.1517	250	631	641	889	186	469	476	661	171	431	438	607	
112	108.00	17	168248	294	0.1463	250	623	641	883	186	463	476	656	171	425	438	603	
125	121.44	15	168248	261	0.1242	187	579	449	766	139	430	334	569	128	395	307	523	
140	135.38	13	168248	234	0.1222	178	551	449	729	133	409	334	542	122	376	307	498	
160	147.49	12	161777	207	0.1212	175	537	449	712	130	399	334	529	120	367	307	486	
180	174.38	10	168248	182	0.0671	175	511	449	677	130	380	334	503	120	349	307	462	
200	194.39	9	168248	163	0.0662	175	486	449	644	130	361	334	478	120	332	307	440	
224	211.77	8	161777	144	0.0656	175	474	449	628	130	352	334	467	120	324	307	429	**E4B** (x4)
250	242.89	7	164997	128	0.0386	175	437	449	579	130	325	334	430	120	299	307	395	
280	270.75	7	164997	115	0.0381	175	417	449	552	130	309	334	410	120	284	307	377	
315	294.97	6	158590	101	0.0379	175	405	449	537	130	301	334	399	120	277	307	367	
355	348.76	5	164997	89	0.0207	175	361	449	477	130	268	334	355	120	246	307	326	
400	388.77	5	164997	80	0.0205	175	344	449	455	130	256	334	338	120	235	307	311	
450	423.55	4	158590	71	0.0203	175	340	449	452	130	248	334	329	120	228	307	302	
500	481.85	4	174845	68	0.0201	175	340	449	452	130	242	334	321	120	223	307	295	

For tunnel bell housings with an integrated fan, please refer to the calculation method presented on page 25.
Dimensions of motor bell housing are shown in page 272.

E3B / E4B ..48

SPLIT HOUSING

50 Hz

191 kNm

	i_N	i_{eff}	n_2 [rpm]	T_{2N} [Nm]	P_N [kW]	J [Kgm²]	R1 P_{t0} [kW]	R1	R1 H_2O	R1 +H_2O	S5 P_{t0} [kW]	S5	S5 H_2O	S5 +H_2O	T6 P_{t0} [kW]	T6	T6 H_2O	T6 +H_2O	Type
n_1 = 1000 rpm	**9**	8.71	115	101111	1216	4.5217	345	714	742	1084	256	530	552	805	235	487	507	740	
	10	9.89	101	114722	1215	3.9946	345	714	742	1084	256	530	552	805	235	487	507	740	
	11.2	10.78	93	125417	1218	3.7094	345	714	742	1084	256	530	552	805	235	487	507	740	
	12.5	12.37	81	143889	1218	3.3422	345	714	742	1084	256	530	552	805	235	487	507	740	
	14	14.08	71	164306	1222	3.0780	345	714	742	1084	256	530	552	805	235	487	507	740	
	16	15.51	64	180833	1221	2.9215	345	714	742	1084	256	530	552	805	235	487	507	740	
	18	17.72	56	180833	1068	2.7489	361	748	749	1136	268	556	557	844	247	511	512	776	
	20	19.75	51	190613	1010	2.6779	339	702	739	1066	252	521	549	792	232	479	505	728	
	22.4	21.76	46	173542	835	2.5936	334	691	739	1050	248	514	549	780	228	472	505	717	**E3B** x3
	25	25.45	39	172083	708	1.4067	314	651	739	988	234	483	549	734	215	444	505	675	
	28	28.37	35	188125	694	1.3722	297	615	739	934	221	457	549	694	203	420	505	638	
	31.5	31.25	32	185092	620	1.3314	295	611	739	928	219	454	549	690	202	417	505	634	
	35.5	35.44	28	188739	558	0.8148	269	556	739	867	200	413	549	644	183	380	505	592	
	40	39.51	25	188739	500	0.7970	259	525	739	849	192	390	549	631	177	359	505	580	
	45	43.53	23	170625	410	0.7760	258	518	739	849	192	385	549	631	176	354	505	580	
	50	50.89	20	185092	381	0.4387	250	481	739	849	186	357	549	631	171	328	505	580	
	56	56.73	18	185092	342	0.4301	250	451	739	849	186	335	549	631	171	308	505	580	
	63	62.50	16	175000	293	0.4199	250	441	739	849	186	328	549	631	171	301	505	580	
	71	68.75	15	185092	282	0.4143	250	422	739	849	186	314	549	631	171	289	505	580	
	80	81.22	12	185092	239	0.3341	189	392	555	595	141	291	412	442	129	268	379	407	
	90	90.54	11	185092	214	0.3307	178	369	555	561	133	274	412	417	122	252	379	383	
	100	99.75	10	185092	194	0.3267	176	363	555	551	131	269	412	409	121	248	379	376	
	112	116.63	9	185092	166	0.1834	175	348	555	528	130	258	412	392	120	237	379	361	
	125	130.01	8	181481	146	0.1818	175	327	555	497	130	243	412	369	120	224	379	339	
	140	143.23	7	181481	133	0.1798	175	321	555	488	130	239	412	362	120	219	379	333	**E4B** x4
	160	162.45	6	181481	117	0.1059	175	298	555	453	130	222	412	337	120	204	379	309	
	180	181.08	6	181481	105	0.1050	175	282	555	429	130	210	412	318	120	193	379	293	
	200	199.50	5	181481	95	0.1040	175	277	555	420	130	206	412	312	120	189	379	287	
	224	233.26	4	181481	81	0.0568	175	254	555	378	130	185	412	281	120	170	379	258	
	250	260.02	4	181481	73	0.0564	175	253	555	366	130	175	412	266	120	161	379	245	
	280	286.46	3	181481	66	0.0559	175	253	555	366	130	172	412	261	120	158	379	240	
	315	315.10	3	181481	60	0.0556	175	253	555	366	130	164	412	250	120	151	379	229	

E3B / E4B ..48 — SPLIT HOUSING — 50 Hz — 191 kNm

n_1 = 1500 rpm

i_N	i_{eff}	n_2 [rpm]	T_{2N} [Nm]	P_N [kW]	J [Kgm²]	R1 P_{t0} [kW]	R1	R1 H_2O	R1 $+H_2O$	S5 P_{t0} [kW]	S5	S5 H_2O	S5 $+H_2O$	T6 P_{t0} [kW]	T6	T6 H_2O	T6 $+H_2O$	Type
9	8.71	172	101111	1824	4.5217	329	974	739	1328	245	724	549	987	225	665	505	907	
10	9.89	152	114722	1822	3.9946	329	974	739	1328	245	724	549	987	225	665	505	907	
11.2	10.78	139	125417	1828	3.7094	329	974	739	1328	245	724	549	987	225	665	505	907	
12.5	12.37	121	143889	1827	3.3422	329	974	739	1328	245	724	549	987	225	665	505	907	
14	14.08	107	164306	1833	3.0780	329	974	739	1328	245	724	549	987	225	665	505	907	
16	15.51	97	180833	1832	2.9215	329	974	739	1328	245	724	549	987	225	665	505	907	
18	17.72	85	180833	1603	2.7489	346	1023	739	1395	257	760	549	1036	236	699	505	953	
20	19.75	76	190613	1516	2.6779	324	960	739	1308	241	713	549	972	222	655	505	894	
22.4	21.76	69	173542	1252	2.5936	318	939	739	1281	236	698	549	952	217	642	505	875	**E3B** (x3)
25	25.45	59	172083	1062	1.4067	302	894	739	1218	225	664	549	905	206	610	505	832	
28	28.37	53	188125	1042	1.3722	285	844	739	1151	212	627	549	855	195	576	505	786	
31.5	31.25	48	185092	930	1.3314	282	835	739	1138	210	620	549	845	193	570	505	777	
35.5	35.44	42	188739	836	0.8148	260	765	739	1043	193	568	549	775	177	522	505	712	
40	39.51	38	188739	750	0.7970	252	719	739	999	187	534	549	743	172	491	505	683	
45	43.53	34	170625	616	0.7760	250	703	739	992	186	522	549	737	171	480	505	677	
50	50.89	29	185092	571	0.4387	250	656	739	974	186	487	549	724	171	448	505	665	
56	56.73	26	185092	512	0.4301	250	614	739	974	186	456	549	724	171	419	505	665	
63	62.50	24	175000	440	0.4199	250	597	739	974	186	444	549	724	171	408	505	665	
71	68.75	22	185092	423	0.4143	250	572	739	974	186	425	549	724	171	391	505	665	
80	81.22	18	185092	358	0.3341	180	531	555	724	133	395	412	538	123	363	379	495	
90	90.54	17	185092	321	0.3307	175	500	555	681	130	371	412	506	120	341	379	465	
100	99.75	15	185092	291	0.3267	175	490	555	668	130	364	412	496	120	335	379	456	
112	116.63	13	185092	249	0.1834	175	473	555	644	130	351	412	479	120	323	379	440	
125	130.01	12	181481	219	0.1818	175	444	555	605	130	330	412	450	120	303	379	413	
140	143.23	10	181481	199	0.1798	175	435	555	593	130	323	412	441	120	297	379	405	**E4B** (x4)
160	162.45	9	181481	175	0.1059	175	407	555	555	130	303	412	413	120	278	379	379	
180	181.08	8	181481	157	0.1050	175	384	555	524	130	286	412	389	120	263	379	358	
200	199.50	8	181481	143	0.1040	175	376	555	513	130	280	412	381	120	257	379	350	
224	233.26	6	181481	122	0.0568	175	344	555	463	130	252	412	343	120	232	379	316	
250	260.02	6	181481	110	0.0564	175	340	555	452	130	238	412	325	120	219	379	298	
280	286.46	5	181481	100	0.0559	175	340	555	452	130	233	412	317	120	214	379	292	
315	315.10	5	181481	90	0.0556	175	340	555	452	130	222	412	303	120	204	379	279	

E3B / E4B ..48

SPLIT HOUSING

60 Hz

191 kNm

	i_N	i_{eff}	n_2 [rpm]	T_{2N} [Nm]	P_N [kW]	J [Kgm²]	R1 P_{t0} [kW]	R1	R1 H_2O	R1 +H_2O	S5 P_{t0} [kW]	S5	S5 H_2O	S5 +H_2O	T6 P_{t0} [kW]	T6	T6 H_2O	T6 +H_2O	Type
n_1 = 1200 rpm	**9**	8.71	138	101111	1459	4.5217	338	821	740	1184	251	610	550	880	231	561	506	809	
	10	9.89	121	114722	1458	3.9946	338	821	740	1184	251	610	550	880	231	561	506	809	
	11.2	10.78	111	125417	1462	3.7094	338	821	740	1184	251	610	550	880	231	561	506	809	
	12.5	12.37	97	143889	1462	3.3422	338	821	740	1184	251	610	550	880	231	561	506	809	
	14	14.08	85	164306	1466	3.0780	338	821	740	1184	251	610	550	880	231	561	506	809	
	16	15.51	77	180833	1465	2.9215	338	821	740	1184	251	610	550	880	231	561	506	809	
	18	17.72	68	180833	1282	2.7489	355	861	743	1243	264	640	552	923	243	588	507	849	
	20	19.75	61	190613	1212	2.6779	333	808	739	1165	247	600	549	866	227	552	505	796	
	22.4	21.76	55	173542	1002	2.5936	327	793	739	1145	243	589	549	851	223	542	505	782	**E3B** x3
	25	25.45	47	172083	850	1.4067	309	749	739	1081	229	557	549	803	211	512	505	738	
	28	28.37	42	188125	833	1.3722	292	708	739	1021	217	526	549	759	199	483	505	697	
	31.5	31.25	38	185092	744	1.3314	289	702	739	1012	215	521	549	752	198	479	505	691	
	35.5	35.44	34	188739	669	0.8148	264	641	739	924	196	476	549	687	180	438	505	631	
	40	39.51	30	188739	600	0.7970	256	604	739	881	190	449	549	655	175	412	505	602	
	45	43.53	28	170625	493	0.7760	254	593	739	877	189	441	549	652	174	405	505	599	
	50	50.89	24	185092	457	0.4387	250	552	739	849	186	410	549	631	171	377	505	580	
	56	56.73	21	185092	410	0.4301	250	517	739	849	186	384	549	631	171	353	505	580	
	63	62.50	19	175000	352	0.4199	250	505	739	849	186	375	549	631	171	345	505	580	
	71	68.75	17	185092	338	0.4143	250	484	739	849	186	359	549	631	171	330	505	580	
	80	81.22	15	185092	286	0.3341	185	448	555	647	137	333	412	481	126	306	379	442	
	90	90.54	13	185092	257	0.3307	176	422	555	609	131	314	412	452	120	288	379	416	
	100	99.75	12	185092	233	0.3267	175	414	555	598	130	308	412	444	120	283	379	408	
	112	116.63	10	185092	199	0.1834	175	399	555	575	130	296	412	427	120	272	379	393	
	125	130.01	9	181481	175	0.1818	175	375	555	541	130	278	412	402	120	256	379	369	
	140	143.23	8	181481	159	0.1798	175	367	555	530	130	273	412	394	120	251	379	362	**E4B** x4
	160	162.45	7	181481	140	0.1059	175	343	555	495	130	255	412	367	120	234	379	338	
	180	181.08	7	181481	126	0.1050	175	324	555	467	130	241	412	347	120	221	379	319	
	200	199.50	6	181481	114	0.1040	175	317	555	458	130	236	412	340	120	217	379	313	
	224	233.26	5	181481	98	0.0568	175	285	555	411	130	212	412	306	120	195	379	281	
	250	260.02	5	181481	88	0.0564	175	270	555	390	130	201	412	289	120	184	379	266	
	280	286.46	4	181481	80	0.0559	175	264	555	381	130	196	412	283	120	180	379	260	
	315	315.10	4	181481	72	0.0556	175	256	555	370	130	188	412	271	120	173	379	249	

E3B / E4B ..48 — SPLIT HOUSING — 60 Hz — 191 kNm

n_1 = 1800 rpm

i_N	i_{eff}	n_2 [rpm]	T_{2N} [Nm]	P_N [kW]	J [Kgm²]	R1 P_{t0} [kW]	R1	R1 H_2O	R1 $+H_2O$	S5 P_{t0} [kW]	S5	S5 H_2O	S5 $+H_2O$	T6 P_{t0} [kW]	T6	T6 H_2O	T6 $+H_2O$	Type
9	8.71	207	101111	2188	4.5217	321	1005	739	1350	238	747	549	1003	219	687	505	922	
10	9.89	182	114722	2187	3.9946	321	1005	739	1350	238	747	549	1003	219	687	505	922	
11.2	10.78	167	125417	2193	3.7094	321	1005	739	1350	238	747	549	1003	219	687	505	922	
12.5	12.37	146	143889	2193	3.3422	321	1005	739	1350	238	747	549	1003	219	687	505	922	
14	14.08	128	164306	2200	3.0780	321	1005	739	1350	238	747	549	1003	219	687	505	922	
16	15.51	116	180833	2198	2.9215	321	1005	739	1350	238	747	549	1003	219	687	505	922	
18	17.72	102	180833	1923	2.7489	337	1056	739	1418	250	785	549	1054	230	721	505	969	
20	19.75	91	190613	1819	2.6779	316	992	739	1332	235	737	549	989	216	677	505	910	
22.4	21.76	83	173542	1503	2.5936	309	968	739	1300	229	719	549	966	211	661	505	888	**E3B** (x3)
25	25.45	71	172083	1275	1.4067	296	927	739	1245	220	689	549	925	202	633	505	850	
28	28.37	63	188125	1250	1.3722	279	876	739	1176	208	651	549	874	191	598	505	803	
31.5	31.25	58	185092	1116	1.3314	276	864	739	1161	205	642	549	862	188	590	505	793	
35.5	35.44	51	188739	1004	0.8148	257	795	739	1067	191	590	549	793	175	543	505	729	
40	39.51	46	188739	900	0.7970	250	746	739	1010	186	554	549	750	171	509	505	690	
45	43.53	41	170625	739	0.7760	250	726	739	1000	186	539	549	743	171	496	505	683	
50	50.89	35	185092	685	0.4387	250	679	739	974	186	505	549	724	171	464	505	665	
56	56.73	32	185092	615	0.4301	250	634	739	974	186	471	549	724	171	433	505	665	
63	62.50	29	175000	528	0.4199	250	615	739	974	186	457	549	724	171	420	505	665	
71	68.75	26	185092	507	0.4143	250	589	739	974	186	438	549	724	171	402	505	665	
80	81.22	22	185092	430	0.3341	177	550	555	739	131	409	412	549	121	376	379	505	**E4B** (x4)
90	90.54	20	185092	385	0.3307	175	517	555	695	130	384	412	516	120	353	379	474	
100	99.75	18	185092	350	0.3267	175	507	555	681	130	377	412	506	120	346	379	465	
112	116.63	15	185092	299	0.1834	175	489	555	657	130	364	412	488	120	334	379	449	
125	130.01	14	181481	263	0.1818	175	459	555	617	130	341	412	458	120	314	379	421	
140	143.23	13	181481	239	0.1798	175	450	555	604	130	334	412	449	120	307	379	412	
160	162.45	11	181481	211	0.1059	175	422	555	567	130	314	412	421	120	288	379	387	
180	181.08	10	181481	189	0.1050	175	398	555	534	130	296	412	397	120	272	379	365	
200	199.50	9	181481	171	0.1040	175	389	555	523	130	289	412	388	120	266	379	357	
224	233.26	8	181481	147	0.0568	175	352	555	472	130	261	412	351	120	240	379	322	
250	260.02	7	181481	132	0.0564	175	341	555	455	130	247	412	331	120	227	379	305	
280	286.46	6	181481	119	0.0559	175	340	555	452	130	241	412	323	120	221	379	297	
315	315.10	6	181481	109	0.0556	175	340	555	452	130	230	412	309	120	211	379	284	

E3B / E4B ..50

SPLIT HOUSING

50 Hz

212 kNm

n_1 = 1000 rpm

i_N	i_{eff}	n_2 [rpm]	T_{2N} [Nm]	P_N [kW]	J [Kgm²]	R1 P_{t0} [kW]	R1	R1 H_2O	R1 $+H_2O$	S5 P_{t0} [kW]	S5	S5 H_2O	S5 $+H_2O$	T6 P_{t0} [kW]	T6	T6 H_2O	T6 $+H_2O$	Type
10	9.89	101	115500	1223	4.4490	344	712	806	1174	256	529	599	872	235	487	550	802	
11.2	10.78	93	126000	1224	3.9514	344	712	806	1174	256	529	599	872	235	487	550	802	
12.5	12.37	81	143500	1215	3.6531	344	712	806	1174	256	529	599	872	235	487	550	802	
14	14.08	71	163333	1215	3.3139	344	712	806	1174	256	529	599	872	235	487	550	802	
16	15.51	64	180833	1221	3.0518	344	712	806	1174	256	529	599	872	235	487	550	802	
18	17.72	56	210795	1246	2.7641	360	746	844	1229	268	554	627	913	246	509	576	840	
20	19.75	51	210795	1117	2.6901	337	698	789	1150	250	518	586	854	230	476	539	785	
22.4	21.76	46	210795	1014	2.6037	335	694	784	1143	249	515	583	849	229	474	536	781	
25	25.45	39	212290	874	1.4141	315	652	753	1075	234	485	559	799	215	446	514	734	E3B (x3)
28	28.37	35	212290	784	1.3782	296	613	739	1011	220	456	549	751	202	419	505	690	
31.5	31.25	32	212290	711	1.3363	295	611	739	1007	219	454	549	748	202	417	505	688	
35.5	35.44	28	212290	627	0.8186	268	555	739	915	199	412	549	680	183	379	505	625	
40	39.51	25	204815	543	0.8001	258	523	739	879	192	389	549	653	176	357	505	600	
45	43.53	23	212290	511	0.7785	259	523	739	883	193	389	549	656	177	357	505	603	
50	50.89	20	204815	421	0.4405	250	481	739	849	186	357	549	631	171	328	505	580	
56	56.73	18	212290	392	0.4316	250	453	739	849	186	337	549	631	171	309	505	580	
63	62.50	16	212290	356	0.4211	250	446	739	849	186	332	549	631	171	305	505	580	
71	68.75	15	212290	323	0.4153	250	425	739	849	186	316	549	631	171	290	505	580	
80	81.22	12	204815	264	0.3348	191	394	555	650	142	293	412	483	130	269	379	444	
90	90.54	11	209238	242	0.3313	180	373	555	614	134	277	412	456	123	254	379	419	
100	99.75	10	204815	215	0.3272	178	366	555	603	132	272	412	448	121	250	379	412	
112	116.63	9	209238	188	0.1837	175	351	555	579	130	261	412	430	120	240	379	395	
125	130.01	8	204815	165	0.1820	175	331	555	545	130	246	412	405	120	226	379	372	
140	143.23	7	205032	150	0.1800	175	325	555	536	130	242	412	398	120	222	379	366	E4B (x4)
160	162.45	6	204815	132	0.1061	175	302	555	498	130	224	412	370	120	206	379	340	
180	181.08	6	209238	121	0.1052	175	287	555	472	130	213	412	351	120	196	379	323	
200	199.50	5	204815	108	0.1042	175	281	555	463	130	209	412	344	120	192	379	316	
224	233.26	4	205032	92	0.0569	175	256	555	416	130	188	412	309	120	173	379	284	
250	260.02	4	204815	82	0.0564	175	253	555	395	130	178	412	294	120	164	379	270	
280	286.46	3	205032	75	0.0559	175	253	555	388	130	175	412	288	120	161	379	265	
315	315.10	3	209238	70	0.0557	175	253	555	375	130	168	412	277	120	155	379	255	

E3B / E4B ..50 — SPLIT HOUSING — 50 Hz — 212 kNm

	i_N	i_{eff}	n_2 [rpm]	T_{2N} [Nm]	P_N [kW]	J [Kgm²]	R1 P_{t0} [kW]	R1	R1 H_2O	R1 $+H_2O$	S5 P_{t0} [kW]	S5	S5 H_2O	S5 $+H_2O$	T6 P_{t0} [kW]	T6	T6 H_2O	T6 $+H_2O$	Type
n_1 = 1500 rpm	**10**	9.89	152	115500	1835	4.4490	331	979	777	1422	246	727	577	1057	226	668	531	972	
	11.2	10.78	139	126000	1836	3.9514	331	979	777	1422	246	727	577	1057	226	668	531	972	
	12.5	12.37	121	143500	1822	3.6531	331	979	777	1422	246	727	577	1057	226	668	531	972	
	14	14.08	107	163333	1822	3.3139	331	979	777	1422	246	727	577	1057	226	668	531	972	
	16	15.51	97	180833	1832	3.0518	331	979	777	1422	246	727	577	1057	226	668	531	972	
	18	17.72	85	210795	1868	2.7641	347	1027	813	1493	258	763	604	1109	237	701	555	1020	
	20	19.75	76	210795	1676	2.6901	324	958	759	1393	241	712	564	1035	221	654	518	951	
	22.4	21.76	69	210795	1521	2.6037	321	951	759	1382	239	706	564	1027	220	649	519	944	
	25	25.45	59	212290	1310	1.4141	305	903	740	1313	227	671	550	975	209	617	506	897	**E3B** (x3)
	28	28.37	53	212290	1176	1.3782	286	845	739	1228	212	628	549	913	195	577	505	839	
	31.5	31.25	48	212290	1067	1.3363	284	839	739	1219	211	623	549	906	194	573	505	833	
	35.5	35.44	42	212290	941	0.8186	260	767	739	1115	193	570	549	828	178	524	505	761	
	40	39.51	38	204815	814	0.8001	252	719	739	1045	187	534	549	776	172	491	505	714	
	45	43.53	34	212290	766	0.7785	253	716	739	1041	188	532	549	773	173	489	505	711	
	50	50.89	29	204815	632	0.4405	250	659	739	992	186	490	549	737	171	450	505	678	
	56	56.73	26	212290	588	0.4316	250	620	739	974	186	460	549	724	171	423	505	665	
	63	62.50	24	212290	534	0.4211	250	609	739	974	186	453	549	724	171	416	505	665	
	71	68.75	22	212290	485	0.4153	250	579	739	974	186	430	549	724	171	396	505	665	
	80	81.22	18	204815	396	0.3348	181	536	555	780	135	398	412	579	124	366	379	532	
	90	90.54	17	209238	363	0.3313	175	506	555	736	130	376	412	547	120	346	379	502	
	100	99.75	15	204815	323	0.3272	175	496	555	721	130	368	412	536	120	339	379	492	
	112	116.63	13	209238	282	0.1837	175	479	555	696	130	356	412	517	120	327	379	476	
	125	130.01	12	204815	247	0.1820	175	450	555	655	130	335	412	486	120	308	379	447	
	140	143.23	10	205032	225	0.1800	175	442	555	643	130	329	412	478	120	302	379	439	**E4B** (x4)
	160	162.45	9	204815	198	0.1061	175	414	555	602	130	308	412	447	120	283	379	411	
	180	181.08	8	209238	181	0.1052	175	392	555	570	130	291	412	423	120	268	379	389	
	200	199.50	8	204815	161	0.1042	175	383	555	557	130	285	412	414	120	262	379	381	
	224	233.26	6	205032	138	0.0569	175	348	555	503	130	257	412	373	120	236	379	343	
	250	260.02	6	204815	124	0.0564	175	340	555	475	130	243	412	353	120	223	379	325	
	280	286.46	5	205032	112	0.0559	175	340	555	466	130	238	412	346	120	219	379	318	
	315	315.10	5	209238	104	0.0557	175	340	555	456	130	228	412	332	120	210	379	305	

E3B / E4B ..50

SPLIT HOUSING

60 Hz

212 kNm

n_1 = 1200 rpm

i_N	i_{eff}	n_2 [rpm]	T_{2N} [Nm]	P_N [kW]	J [Kgm²]	R1 P_{t0} [kW]	R1	R1 H_2O	R1 $+H_2O$	S5 P_{t0} [kW]	S5	S5 H_2O	S5 $+H_2O$	T6 P_{t0} [kW]	T6	T6 H_2O	T6 $+H_2O$	Type
10	9.89	121	115500	1468	4.4490	339	821	793	1276	252	610	589	948	231	561	542	871	
11.2	10.78	111	126000	1469	3.9514	339	821	793	1276	252	610	589	948	231	561	542	871	
12.5	12.37	97	143500	1458	3.6531	339	821	793	1276	252	610	589	948	231	561	542	871	
14	14.08	85	163333	1458	3.3139	339	821	793	1276	252	610	589	948	231	561	542	871	
16	15.51	77	180833	1465	3.0518	339	821	793	1276	252	610	589	948	231	561	542	871	
18	17.72	68	210795	1495	2.7641	355	861	832	1338	264	640	618	994	243	588	568	914	
20	19.75	61	210795	1341	2.6901	332	804	777	1249	246	598	577	928	227	549	530	853	
22.4	21.76	55	210795	1217	2.6037	329	799	771	1241	245	593	573	922	225	546	527	847	
25	25.45	47	212290	1048	1.4141	311	753	747	1170	231	560	555	870	212	515	510	799	**E3B** (x3)
28	28.37	42	212290	940	1.3782	291	707	739	1098	216	525	549	816	199	483	505	750	
31.5	31.25	38	212290	854	1.3363	290	703	739	1091	215	522	549	811	198	480	505	745	
35.5	35.44	34	212290	753	0.8186	264	641	739	995	196	476	549	739	180	438	505	680	
40	39.51	30	204815	651	0.8001	255	602	739	936	190	448	549	695	174	412	505	639	
45	43.53	28	212290	613	0.7785	256	601	739	934	190	447	549	694	175	411	505	638	
50	50.89	24	204815	506	0.4405	250	553	739	881	186	411	549	654	171	378	505	601	
56	56.73	21	212290	470	0.4316	250	521	739	852	186	387	549	633	171	356	505	582	
63	62.50	19	212290	427	0.4211	250	513	739	849	186	381	549	631	171	350	505	580	
71	68.75	17	212290	388	0.4153	250	488	739	849	186	363	549	631	171	333	505	580	
80	81.22	15	204815	317	0.3348	186	452	555	702	138	336	412	521	127	308	379	479	
90	90.54	13	209238	290	0.3313	177	426	555	662	132	317	412	492	121	291	379	452	
100	99.75	12	204815	258	0.3272	175	418	555	650	130	311	412	483	120	286	379	444	
112	116.63	10	209238	225	0.1837	175	403	555	626	130	300	412	465	120	275	379	428	
125	130.01	9	204815	198	0.1820	175	379	555	589	130	282	412	438	120	259	379	403	
140	143.23	8	205032	180	0.1800	175	373	555	579	130	277	412	430	120	255	379	396	**E4B** (x4)
160	162.45	7	204815	158	0.1061	175	348	555	540	130	258	412	401	120	237	379	369	
180	181.08	7	209238	145	0.1052	175	329	555	512	130	245	412	380	120	225	379	349	
200	199.50	6	204815	129	0.1042	175	323	555	501	130	240	412	372	120	220	379	342	
224	233.26	5	205032	110	0.0569	175	290	555	451	130	216	412	335	120	198	379	308	
250	260.02	5	204815	99	0.0564	175	275	555	427	130	204	412	317	120	188	379	292	
280	286.46	4	205032	90	0.0559	175	270	555	419	130	200	412	311	120	184	379	286	
315	315.10	4	209238	83	0.0557	175	260	555	402	130	193	412	299	120	177	379	275	

E3B / E4B ..50 — SPLIT HOUSING — 60 Hz — 212 kNm

	i_N	i_{eff}	n_2 [rpm]	T_{2N} [Nm]	P_N [kW]	J [Kgm²]	R1 P_{t0} [kW]	R1	R1 H_2O	R1 $+H_2O$	S5 P_{t0} [kW]	S5	S5 H_2O	S5 $+H_2O$	T6 P_{t0} [kW]	T6	T6 H_2O	T6 $+H_2O$	Type
n_1 = 1800 rpm	**10**	9.89	182	115500	2201	4.4490	323	1014	765	1448	240	753	568	1076	221	692	522	989	
	11.2	10.78	167	126000	2203	3.9514	323	1014	765	1448	240	753	568	1076	221	692	522	989	
	12.5	12.37	146	143500	2187	3.6531	323	1014	765	1448	240	753	568	1076	221	692	522	989	
	14	14.08	128	163333	2187	3.3139	323	1014	765	1448	240	753	568	1076	221	692	522	989	
	16	15.51	116	180833	2198	3.0518	323	1014	765	1448	240	753	568	1076	221	692	522	989	
	18	17.72	102	210795	2242	2.7641	339	1064	795	1520	252	791	591	1129	232	727	543	1038	
	20	19.75	91	210795	2011	2.6901	317	993	749	1418	235	738	557	1054	216	678	512	968	
	22.4	21.76	83	210795	1826	2.6037	314	984	750	1406	233	731	557	1044	214	672	512	960	
	25	25.45	71	212290	1572	1.4141	300	941	739	1344	223	699	549	998	205	643	505	918	E3B (x3)
	28	28.37	63	212290	1411	1.3782	281	879	739	1256	208	653	549	933	192	601	505	858	
	31.5	31.25	58	212290	1280	1.3363	278	871	739	1244	207	647	549	925	190	595	505	850	
	35.5	35.44	51	212290	1129	0.8186	258	799	739	1141	192	594	549	848	176	546	505	779	
	40	39.51	46	204815	977	0.8001	250	747	739	1066	186	555	549	792	171	510	505	728	
	45	43.53	41	212290	919	0.7785	250	743	739	1060	186	552	549	788	171	507	505	724	
	50	50.89	35	204815	759	0.4405	250	684	739	1000	186	508	549	743	171	467	505	683	
	56	56.73	32	212290	705	0.4316	250	642	739	974	186	477	549	724	171	439	505	665	
	63	62.50	29	212290	640	0.4211	250	631	739	974	186	469	549	724	171	431	505	665	
	71	68.75	26	212290	582	0.4153	250	599	739	974	186	445	549	724	171	409	505	665	
	80	81.22	22	204815	475	0.3348	178	557	555	795	132	414	412	591	122	380	379	543	
	90	90.54	20	209238	436	0.3313	175	525	555	750	130	390	412	557	120	359	379	512	
	100	99.75	18	204815	387	0.3272	175	514	555	734	130	382	412	545	120	351	379	501	
	112	116.63	15	209238	338	0.1837	175	497	555	710	130	369	412	527	120	339	379	485	
	125	130.01	14	204815	297	0.1820	175	467	555	667	130	347	412	495	120	319	379	455	
	140	143.23	13	205032	270	0.1800	175	458	555	654	130	340	412	486	120	313	379	447	E4B (x4)
	160	162.45	11	204815	238	0.1061	175	430	555	614	130	319	412	456	120	293	379	419	
	180	181.08	10	209238	218	0.1052	175	407	555	581	130	302	412	432	120	278	379	397	
	200	199.50	9	204815	194	0.1042	175	397	555	567	130	295	412	422	120	271	379	388	
	224	233.26	8	205032	166	0.0569	175	359	555	513	130	267	412	381	120	245	379	350	
	250	260.02	7	204815	148	0.0564	175	345	555	485	130	252	412	360	120	232	379	331	
	280	286.46	6	205032	135	0.0559	175	341	555	474	130	247	412	352	120	227	379	324	
	315	315.10	6	209238	125	0.0557	175	340	555	460	130	237	412	338	120	218	379	311	

E3B / E4B ..53 — SPLIT HOUSING — 50 Hz — 255 kNm

	i_N	i_{eff}	n_2 [rpm]	T_{2N} [Nm]	P_N [kW]	J [Kgm²]	R1 P_{t0} [kW]	R1	R1 H_2O	R1 $+H_2O$	S5 P_{t0} [kW]	S5	S5 H_2O	S5 $+H_2O$	T6 P_{t0} [kW]	T6	T6 H_2O	T6 $+H_2O$	Type
n_1 = 1000 rpm	**11.2**	10.45	96	121333	1216	4.7262	425	886	1036	1497	315	658	769	1112	290	605	707	1022	
	12.5	11.87	84	138667	1223	4.1763	425	886	1036	1497	315	658	769	1112	290	605	707	1022	
	14	12.93	77	150667	1220	3.8305	425	886	1036	1497	315	658	769	1112	290	605	707	1022	
	16	14.84	67	173333	1223	3.4412	425	886	1036	1497	315	658	769	1112	290	605	707	1022	
	18	16.90	59	196000	1215	3.1577	425	886	1036	1497	315	658	769	1112	290	605	707	1022	
	20	18.61	54	216000	1216	2.9857	425	886	1036	1497	315	658	769	1112	290	605	707	1022	
	22.4	21.27	47	252869	1245	2.8236	444	927	1084	1567	330	689	805	1164	304	633	740	1070	
	25	23.71	42	252869	1117	2.7380	416	867	1014	1465	309	644	753	1089	284	592	692	1001	
	28	26.12	38	254577	1021	2.6432	414	863	1009	1459	307	641	750	1084	283	590	689	996	**E3B**
	31.5	30.54	33	252869	867	1.4429	388	810	956	1368	288	602	710	1017	265	553	653	935	x3
	35.5	34.04	29	254577	783	1.4014	365	761	929	1286	271	566	690	956	249	520	634	878	
	40	37.50	27	253841	709	1.3554	364	758	932	1282	270	564	693	952	248	518	637	875	
	45	42.53	24	253841	625	0.8335	330	688	928	1162	245	511	690	864	225	470	634	794	
	50	47.41	21	253841	561	0.8121	312	650	928	1108	232	483	690	823	213	444	634	757	
	56	52.23	19	253841	509	0.7884	313	648	928	1112	233	481	690	826	214	443	634	760	
	63	61.07	16	253841	435	0.4477	301	597	928	1069	223	443	690	794	205	407	634	730	
	71	68.08	15	253841	390	0.4374	295	560	928	1058	219	416	690	786	201	382	634	723	
	80	75.00	13	253841	354	0.4259	295	552	928	1058	219	410	690	786	201	377	634	723	
	90	82.50	12	239129	304	0.4193	295	523	928	1058	219	388	690	786	201	357	634	723	
	100	97.47	10	248888	267	0.3376	234	489	721	826	174	363	536	613	160	334	492	564	
	112	108.65	9	248888	240	0.3336	229	460	721	778	170	342	536	578	156	314	492	531	
	125	119.70	8	248888	218	0.3290	229	453	721	765	170	336	536	569	156	309	492	523	
	140	139.96	7	248888	186	0.1851	229	433	721	732	170	322	536	544	156	296	492	500	
	160	156.01	6	248888	167	0.1831	229	409	721	691	170	304	536	513	156	279	492	472	
	180	171.88	6	248888	152	0.1810	229	402	721	679	170	299	536	505	156	275	492	464	**E4B**
	200	194.94	5	248888	134	0.1068	229	373	721	630	170	277	536	468	156	255	492	430	x4
	224	217.30	5	248888	120	0.1057	229	353	721	596	170	262	536	443	156	241	492	407	
	250	239.40	4	243984	107	0.1046	229	346	721	584	170	257	536	434	156	236	492	399	
	280	279.91	4	243984	91	0.0572	229	310	721	525	170	231	536	390	156	212	492	358	
	315	312.02	3	243984	82	0.0567	229	301	721	498	170	219	536	370	156	201	492	340	
	355	343.75	3	243984	74	0.0562	229	299	721	488	170	215	536	363	156	197	492	334	
	400	378.13	3	234322	65	0.0559	229	299	721	465	170	205	536	346	156	188	492	318	

E3B / E4B ..53 — SPLIT HOUSING — 50 Hz — 255 kNm

	i_N	i_{eff}	n_2 [rpm]	T_{2N} [Nm]	P_N [kW]	J [Kgm²]	R1 P_{t0} [kW]	R1	R1 H_2O	R1 $+H_2O$	S5 P_{t0} [kW]	S5	S5 H_2O	S5 $+H_2O$	T6 P_{t0} [kW]	T6	T6 H_2O	T6 $+H_2O$	Type
n_1 = 1500 rpm	**11.2**	10.45	144	121333	1824	4.7262	407	1213	993	1799	302	901	738	1337	278	829	678	1229	
	12.5	11.87	126	138667	1835	4.1763	407	1213	993	1799	302	901	738	1337	278	829	678	1229	
	14	12.93	116	150667	1830	3.8305	407	1213	993	1799	302	901	738	1337	278	829	678	1229	
	16	14.84	101	173333	1835	3.4412	407	1213	993	1799	302	901	738	1337	278	829	678	1229	
	18	16.90	89	196000	1822	3.1577	407	1213	993	1799	302	901	738	1337	278	829	678	1229	
	20	18.61	81	216000	1823	2.9857	407	1213	993	1799	302	901	738	1337	278	829	678	1229	
	22.4	21.27	71	252869	1868	2.8236	427	1272	1041	1887	317	945	774	1402	292	869	711	1289	
	25	23.71	63	252869	1675	2.7380	398	1187	972	1761	296	882	722	1308	272	811	664	1203	
	28	26.12	57	254577	1531	2.6432	396	1180	966	1750	294	877	718	1300	270	806	660	1195	**E3B** (x3)
	31.5	30.54	49	252869	1301	1.4429	375	1118	939	1658	279	831	697	1232	256	764	641	1132	
	35.5	34.04	44	254577	1175	1.4014	351	1047	928	1552	261	778	690	1153	240	715	634	1060	
	40	37.50	40	253841	1063	1.3554	349	1039	928	1541	259	772	690	1145	238	710	634	1053	
	45	42.53	35	253841	937	0.8335	318	949	928	1407	236	705	690	1045	217	648	634	961	
	50	47.41	32	253841	841	0.8121	304	892	928	1323	226	663	690	983	208	609	634	903	
	56	52.23	29	253841	763	0.7884	305	886	928	1313	226	658	690	976	208	605	634	897	
	63	61.07	25	253841	653	0.4477	295	818	928	1244	219	608	690	924	201	558	634	850	
	71	68.08	22	253841	586	0.4374	295	765	928	1207	219	569	690	897	201	523	634	824	
	80	75.00	20	253841	532	0.4259	295	753	928	1207	219	559	690	897	201	514	634	824	
	90	82.50	18	239129	455	0.4193	295	709	928	1207	219	527	690	897	201	485	634	824	
	100	97.47	15	248888	401	0.3376	229	664	721	985	170	493	536	732	156	454	492	673	
	112	108.65	14	248888	360	0.3336	229	625	721	927	170	464	536	688	156	427	492	633	
	125	119.70	13	248888	327	0.3290	229	614	721	911	170	456	536	677	156	420	492	622	
	140	139.96	11	248888	279	0.1851	229	591	721	876	170	439	536	651	156	404	492	598	
	160	156.01	10	248888	251	0.1831	229	557	721	825	170	414	536	613	156	380	492	564	
	180	171.88	9	248888	227	0.1810	229	547	721	811	170	406	536	602	156	373	492	554	**E4B** (x4)
	200	194.94	8	248888	201	0.1068	229	511	721	758	170	380	536	563	156	349	492	517	
	224	217.30	7	248888	180	0.1057	229	482	721	715	170	358	536	531	156	329	492	489	
	250	239.40	6	243984	160	0.1046	229	472	721	700	170	351	536	520	156	322	492	478	
	280	279.91	5	243984	137	0.0572	229	425	721	630	170	315	536	468	156	290	492	430	
	315	312.02	5	243984	123	0.0567	229	408	721	596	170	298	536	443	156	274	492	407	
	355	343.75	4	243984	111	0.0562	229	403	721	583	170	292	536	433	156	269	492	398	
	400	378.13	4	234322	97	0.0559	229	401	721	553	170	277	536	411	156	255	492	378	

E3B / E4B ..53 — SPLIT HOUSING — 60 Hz — 255 kNm

	i_N	i_{eff}	n_2 [rpm]	T_{2N} [Nm]	P_N [kW]	J [Kgm²]	R1 P_{t0} [kW]	R1	R1 H_2O	R1 +H_2O	S5 P_{t0} [kW]	S5	S5 H_2O	S5 +H_2O	T6 P_{t0} [kW]	T6	T6 H_2O	T6 +H_2O	Type
n_1 = 1200 rpm	**11.2**	10.45	115	121333	1459	4.7262	417	1020	1018	1621	310	758	757	1204	285	697	695	1107	
	12.5	11.87	101	138667	1468	4.1763	417	1020	1018	1621	310	758	757	1204	285	697	695	1107	
	14	12.93	93	150667	1464	3.8305	417	1020	1018	1621	310	758	757	1204	285	697	695	1107	
	16	14.84	81	173333	1468	3.4412	417	1020	1018	1621	310	758	757	1204	285	697	695	1107	
	18	16.90	71	196000	1457	3.1577	417	1020	1018	1621	310	758	757	1204	285	697	695	1107	
	20	18.61	64	216000	1459	2.9857	417	1020	1018	1621	310	758	757	1204	285	697	695	1107	
	22.4	21.27	56	252869	1494	2.8236	437	1069	1067	1699	325	794	793	1262	299	730	729	1160	
	25	23.71	51	252869	1340	2.7380	408	998	996	1586	304	742	740	1179	279	682	681	1083	
	28	26.12	46	254577	1225	2.6432	406	993	991	1578	302	738	736	1172	278	678	677	1078	**E3B** x3
	31.5	30.54	39	252869	1041	1.4429	382	934	948	1484	284	694	704	1103	261	638	648	1014	
	35.5	34.04	35	254577	940	1.4014	359	876	928	1393	266	651	690	1035	245	599	634	951	
	40	37.50	32	253841	851	1.3554	357	872	928	1385	265	648	690	1029	244	595	634	946	
	45	42.53	28	253841	750	0.8335	325	793	928	1261	241	589	690	937	222	542	634	861	
	50	47.41	25	253841	673	0.8121	308	748	928	1188	229	556	690	883	211	511	634	812	
	56	52.23	23	253841	611	0.7884	309	744	928	1183	230	553	690	879	211	508	634	808	
	63	61.07	20	253841	522	0.4477	297	686	928	1108	220	510	690	824	203	469	634	757	
	71	68.08	18	253841	469	0.4374	295	643	928	1070	219	478	690	795	201	439	634	731	
	80	75.00	16	253841	425	0.4259	295	634	928	1062	219	471	690	789	201	433	634	725	
	90	82.50	15	239129	364	0.4193	295	599	928	1058	219	445	690	786	201	409	634	723	
	100	97.47	12	248888	321	0.3376	231	559	721	889	172	416	536	660	158	382	492	607	
	112	108.65	11	248888	288	0.3336	229	527	721	837	170	391	536	622	156	360	492	572	
	125	119.70	10	248888	261	0.3290	229	518	721	823	170	385	536	612	156	354	492	562	
	140	139.96	9	248888	223	0.1851	229	497	721	790	170	370	536	587	156	340	492	540	
	160	156.01	8	248888	200	0.1831	229	469	721	745	170	348	536	554	156	320	492	509	
	180	171.88	7	248888	182	0.1810	229	461	721	732	170	342	536	544	156	315	492	500	**E4B** x4
	200	194.94	6	248888	160	0.1068	229	429	721	682	170	319	536	506	156	293	492	466	
	224	217.30	6	248888	144	0.1057	229	405	721	644	170	301	536	479	156	277	492	440	
	250	239.40	5	243984	128	0.1046	229	397	721	631	170	295	536	469	156	271	492	431	
	280	279.91	4	243984	110	0.0572	229	357	721	567	170	265	536	421	156	244	492	387	
	315	312.02	4	243984	98	0.0567	229	338	721	537	170	251	536	399	156	231	492	367	
	355	343.75	3	243984	89	0.0562	229	331	721	526	170	246	536	391	156	226	492	359	
	400	378.13	3	234322	78	0.0559	229	315	721	500	170	234	536	372	156	215	492	342	

E3B / E4B ..53 — SPLIT HOUSING — 60 Hz — 255 kNm

	i_N	i_{eff}	n_2 [rpm]	T_{2N} [Nm]	P_N [kW]	J [Kgm²]	R1 P_{t0} [kW]	R1	R1 H_2O	R1 $+H_2O$	S5 P_{t0} [kW]	S5	S5 H_2O	S5 $+H_2O$	T6 P_{t0} [kW]	T6	T6 H_2O	T6 $+H_2O$	Type
n_1 = 1800 rpm	**11.2**	10.45	172	121333	2189	4.7262	397	1255	973	1827	295	933	723	1357	271	857	664	1248	
	12.5	11.87	152	138667	2202	4.1763	397	1255	973	1827	295	933	723	1357	271	857	664	1248	
	14	12.93	139	150667	2197	3.8305	397	1255	973	1827	295	933	723	1357	271	857	664	1248	
	16	14.84	121	173333	2202	3.4412	397	1255	973	1827	295	933	723	1357	271	857	664	1248	
	18	16.90	107	196000	2186	3.1577	397	1255	973	1827	295	933	723	1357	271	857	664	1248	
	20	18.61	97	216000	2188	2.9857	397	1255	973	1827	295	933	723	1357	271	857	664	1248	
	22.4	21.27	85	252869	2241	2.8236	417	1316	1016	1916	310	978	755	1423	285	899	694	1309	
	25	23.71	76	252869	2011	2.7380	389	1229	950	1788	289	913	706	1329	266	839	649	1221	
	28	26.12	69	254577	1837	2.6432	386	1220	952	1776	287	907	707	1320	264	834	650	1213	**E3B** (x3)
	31.5	30.54	59	252869	1561	1.4429	368	1163	930	1693	274	864	691	1258	251	794	635	1156	
	35.5	34.04	53	254577	1410	1.4014	344	1088	928	1584	256	808	690	1177	235	743	634	1082	
	40	37.50	48	253841	1276	1.3554	341	1078	928	1570	254	801	690	1166	233	737	634	1072	
	45	42.53	42	253841	1125	0.8335	312	987	928	1437	232	734	690	1068	213	674	634	981	
	50	47.41	38	253841	1009	0.8121	301	926	928	1349	224	688	690	1002	206	633	634	921	
	56	52.23	34	253841	916	0.7884	301	918	928	1336	223	682	690	993	205	627	634	913	
	63	61.07	29	253841	783	0.4477	295	848	928	1253	219	630	690	931	201	579	634	856	
	71	68.08	26	253841	703	0.4374	295	793	928	1208	219	589	690	898	201	541	634	825	
	80	75.00	24	253841	638	0.4259	295	778	928	1207	219	578	690	897	201	532	634	824	
	90	82.50	22	239129	546	0.4193	295	732	928	1207	219	544	690	897	201	500	634	824	
	100	97.47	18	248888	481	0.3376	229	689	721	1003	170	512	536	745	156	471	492	685	
	112	108.65	17	248888	432	0.3336	229	648	721	943	170	481	536	701	156	442	492	644	
	125	119.70	15	248888	392	0.3290	229	636	721	926	170	473	536	688	156	435	492	633	
	140	139.96	13	248888	335	0.1851	229	613	721	892	170	455	536	663	156	418	492	609	
	160	156.01	12	248888	301	0.1831	229	577	721	840	170	429	536	624	156	394	492	573	
	180	171.88	10	248888	273	0.1810	229	566	721	824	170	421	536	612	156	387	492	563	**E4B** (x4)
	200	194.94	9	248888	241	0.1068	229	530	721	772	170	394	536	574	156	362	492	527	
	224	217.30	8	248888	216	0.1057	229	500	721	728	170	372	536	541	156	342	492	497	
	250	239.40	8	243984	192	0.1046	229	489	721	712	170	363	536	529	156	334	492	486	
	280	279.91	6	243984	164	0.0572	229	441	721	642	170	328	536	477	156	301	492	439	
	315	312.02	6	243984	147	0.0567	229	417	721	607	170	310	536	451	156	285	492	414	
	355	343.75	5	243984	134	0.0562	229	411	721	593	170	303	536	441	156	278	492	405	
	400	378.13	5	234322	117	0.0559	229	401	721	562	170	287	536	418	156	264	492	384	

E3B / E4B ..56 — SPLIT HOUSING — 50 Hz — 310 kNm

n_1 = 1000 rpm

i_N	i_{eff}	n_2 [rpm]	T_{2N} [Nm]	P_N [kW]	J [Kgm²]	R1 P_{t0} [kW]	R1	R1 H_2O	R1 $+H_2O$	S5 P_{t0} [kW]	S5	S5 H_2O	S5 $+H_2O$	T6 P_{t0} [kW]	T6	T6 H_2O	T6 $+H_2O$	Type
12.5	12.71	79	148222	1221	5.2589	436	909	1063	1536	324	675	790	1141	298	621	726	1049	
14	14.44	69	167556	1215	4.5970	436	909	1063	1536	324	675	790	1141	298	621	726	1049	
16	15.74	64	183667	1222	4.1348	436	909	1063	1536	324	675	790	1141	298	621	726	1049	
18	18.06	55	209444	1215	3.6926	436	909	1063	1536	324	675	790	1141	298	621	726	1049	
20	20.56	49	240056	1223	3.3682	436	909	1063	1536	324	675	790	1141	298	621	726	1049	
22.4	22.64	44	264222	1222	3.1500	436	909	1063	1536	324	675	790	1141	298	621	726	1049	
25	25.87	39	307614	1245	2.9170	456	951	1112	1607	339	707	826	1194	311	649	759	1098	
28	28.84	35	307614	1117	2.8132	426	889	1040	1503	317	661	773	1117	291	607	710	1026	
31.5	31.77	31	307614	1014	2.7051	425	886	1036	1498	316	658	770	1113	290	605	708	1023	**E3B** (x3)
35.5	37.15	27	307614	867	1.4882	398	829	1001	1402	295	616	744	1041	272	566	684	957	
40	41.41	24	307614	778	1.4379	375	779	993	1317	279	579	738	978	256	532	678	899	
45	45.63	22	307614	706	1.3855	377	778	993	1314	280	578	738	976	258	531	678	897	
50	51.75	19	307614	622	0.8568	360	703	993	1201	267	523	738	893	246	480	678	821	
56	57.68	17	309679	562	0.8308	360	665	993	1170	267	494	738	869	246	454	678	799	
63	63.55	16	309679	510	0.8038	360	664	993	1175	267	493	738	873	246	453	678	802	
71	74.30	13	309679	436	0.4591	360	610	993	1153	267	453	738	857	246	417	678	787	
80	82.83	12	309679	392	0.4465	360	573	993	1153	267	425	738	857	246	391	678	787	
90	91.25	11	306724	352	0.4334	360	564	993	1153	267	419	738	857	246	385	678	787	
100	100.38	10	294814	308	0.4255	360	545	993	1153	267	405	738	857	246	372	678	787	
112	118.59	8	309679	273	0.3421	280	498	772	842	208	370	574	625	191	340	527	575	
125	132.19	8	306724	243	0.3371	280	469	772	792	208	348	574	589	191	320	527	541	
140	145.63	7	306724	221	0.3320	280	461	772	780	208	343	574	579	191	315	527	533	
160	170.28	6	309679	190	0.1873	280	441	772	745	208	328	574	554	191	301	527	509	
180	189.81	5	306724	169	0.1849	280	416	772	703	208	309	574	522	191	284	527	480	
200	209.11	5	300740	151	0.1824	280	408	772	690	208	303	574	513	191	279	527	471	**E4B** (x4)
224	237.17	4	306724	135	0.1079	280	379	772	640	208	281	574	475	191	259	527	437	
250	264.38	4	300740	119	0.1066	280	366	772	604	208	266	574	449	191	244	527	413	
280	291.27	3	300740	108	0.1054	280	364	772	594	208	261	574	441	191	240	527	406	
315	340.56	3	306724	94	0.0578	280	364	772	538	208	235	574	397	191	216	527	364	
355	379.62	3	300740	83	0.0572	280	364	772	527	208	222	574	375	191	204	527	345	
400	418.23	2	294814	74	0.0565	280	364	772	527	208	217	574	367	191	200	527	338	
450	460.05	2	283139	64	0.0562	280	364	772	527	208	207	574	350	191	190	527	322	

E3B / E4B ..56 SPLIT HOUSING 50 Hz 310 kNm

	i_N	i_{eff}	n_2 [rpm]	T_{2N} [Nm]	P_N [kW]	J [Kgm²]	R1 P_{t0} [kW]	R1	R1 H_2O	R1 $+H_2O$	S5 P_{t0} [kW]	S5	S5 H_2O	S5 $+H_2O$	T6 P_{t0} [kW]	T6	T6 H_2O	T6 $+H_2O$	Type
n_1 = 1500 rpm	**12.5**	12.71	118	148222	1832	5.2589	420	1252	1033	1857	312	930	767	1379	287	855	705	1268	
	14	14.44	104	167556	1823	4.5970	420	1252	1033	1857	312	930	767	1379	287	855	705	1268	
	16	15.74	95	183667	1833	4.1348	420	1252	1033	1857	312	930	767	1379	287	855	705	1268	
	18	18.06	83	209444	1822	3.6926	420	1252	1033	1857	312	930	767	1379	287	855	705	1268	
	20	20.56	73	240056	1834	3.3682	420	1252	1033	1857	312	930	767	1379	287	855	705	1268	
	22.4	22.64	66	264222	1833	3.1500	420	1252	1033	1857	312	930	767	1379	287	855	705	1268	
	25	25.87	58	307614	1867	2.9170	440	1312	1074	1945	327	975	798	1445	301	896	733	1328	
	28	28.84	52	307614	1675	2.8132	411	1225	1011	1817	305	910	751	1350	281	837	690	1241	
	31.5	31.77	47	307614	1521	2.7051	409	1219	1014	1808	304	906	754	1343	279	833	693	1235	**E3B**
	35.5	37.15	40	307614	1301	1.4882	386	1151	993	1708	287	856	738	1269	264	786	678	1166	
	40	41.41	36	307614	1167	1.4379	369	1078	993	1599	274	801	738	1188	252	736	678	1092	
	45	45.63	33	307614	1059	1.3855	370	1072	993	1590	275	797	738	1182	253	732	678	1086	
	50	51.75	29	307614	934	0.8568	360	976	993	1448	267	725	738	1076	246	667	678	989	
	56	57.68	26	309679	843	0.8308	360	919	993	1382	267	683	738	1027	246	628	678	944	
	63	63.55	24	309679	765	0.8038	360	914	993	1384	267	679	738	1028	246	624	678	945	
	71	74.30	20	309679	655	0.4591	360	843	993	1333	267	627	738	990	246	576	678	910	
	80	82.83	18	309679	587	0.4465	360	789	993	1333	267	587	738	990	246	539	678	910	
	90	91.25	16	306724	528	0.4334	360	777	993	1333	267	577	738	990	246	531	678	910	
	100	100.38	15	294814	461	0.4255	360	736	993	1333	267	547	738	990	246	503	678	910	
	112	118.59	13	309679	410	0.3421	280	679	772	1006	208	504	574	748	191	463	527	687	
	125	132.19	11	306724	364	0.3371	280	638	772	946	208	474	574	703	191	436	527	646	
	140	145.63	10	306724	331	0.3320	280	628	772	931	208	466	574	691	191	429	527	636	
	160	170.28	9	309679	286	0.1873	280	603	772	894	208	448	574	665	191	412	527	611	
	180	189.81	8	306724	254	0.1849	280	568	772	842	208	422	574	625	191	388	527	575	
	200	209.11	7	300740	226	0.1824	280	556	772	825	208	413	574	613	191	380	527	564	**E4B**
	224	237.17	6	306724	203	0.1079	280	520	772	772	208	387	574	573	191	355	527	527	
	250	264.38	6	300740	179	0.1066	280	497	772	727	208	364	574	540	191	335	527	496	
	280	291.27	5	300740	162	0.1054	280	492	772	713	208	357	574	530	191	329	527	487	
	315	340.56	4	306724	141	0.0578	280	490	772	657	208	322	574	478	191	296	527	439	
	355	379.62	4	300740	124	0.0572	280	490	772	651	208	304	574	451	191	279	527	414	
	400	418.23	4	294814	111	0.0565	280	490	772	651	208	297	574	440	191	273	527	405	
	450	460.05	3	283139	97	0.0562	280	490	772	651	208	282	574	418	191	259	527	384	

E3B / E4B ..56

SPLIT HOUSING

60 Hz

310 kNm

n_1 = 1200 rpm

i_N	i_{eff}	n_2 [rpm]	T_{2N} [Nm]	P_N [kW]	J [Kgm²]	R1 P_{t0} [kW]	R1	R1 H_2O	R1 $+H_2O$	S5 P_{t0} [kW]	S5	S5 H_2O	S5 $+H_2O$	T6 P_{t0} [kW]	T6	T6 H_2O	T6 $+H_2O$	Type
12.5	12.71	94	148222	1466	5.2589	429	1049	1049	1667	319	779	779	1238	293	716	716	1138	
14	14.44	83	167556	1458	4.5970	429	1049	1049	1667	319	779	779	1238	293	716	716	1138	
16	15.74	76	183667	1466	4.1348	429	1049	1049	1667	319	779	779	1238	293	716	716	1138	
18	18.06	66	209444	1457	3.6926	429	1049	1049	1667	319	779	779	1238	293	716	716	1138	
20	20.56	58	240056	1467	3.3682	429	1049	1049	1667	319	779	779	1238	293	716	716	1138	
22.4	22.64	53	264222	1467	3.1500	429	1049	1049	1667	319	779	779	1238	293	716	716	1138	
25	25.87	46	307614	1494	2.9170	449	1098	1096	1745	334	816	815	1297	307	750	749	1192	
28	28.84	42	307614	1340	2.8132	420	1026	1024	1631	312	762	761	1212	287	701	700	1114	
31.5	31.77	38	307614	1216	2.7051	418	1022	1026	1624	311	759	762	1206	286	698	701	1109	**E3B** x3
35.5	37.15	32	307614	1040	1.4882	392	959	994	1523	291	712	738	1132	268	655	679	1041	
40	41.41	29	307614	933	1.4379	372	899	993	1429	277	668	738	1062	254	614	678	976	
45	45.63	26	307614	847	1.3855	374	896	993	1424	278	666	738	1058	255	612	678	972	
50	51.75	23	307614	747	0.8568	360	813	993	1292	267	604	738	960	246	555	678	882	
56	57.68	21	309679	675	0.8308	360	767	993	1219	267	570	738	906	246	524	678	832	
63	63.55	19	309679	612	0.8038	360	764	993	1222	267	568	738	908	246	522	678	834	
71	74.30	16	309679	524	0.4591	360	704	993	1172	267	523	738	871	246	481	678	800	
80	82.83	14	309679	470	0.4465	360	660	993	1153	267	490	738	857	246	451	678	787	
90	91.25	13	306724	422	0.4334	360	650	993	1153	267	483	738	857	246	444	678	787	
100	100.38	12	294814	369	0.4255	360	616	993	1153	267	458	738	857	246	421	678	787	
112	118.59	10	309679	328	0.3421	280	571	772	907	208	424	574	674	191	390	527	619	
125	132.19	9	306724	292	0.3371	280	537	772	853	208	399	574	634	191	367	527	583	
140	145.63	8	306724	265	0.3320	280	528	772	840	208	393	574	624	191	361	527	573	
160	170.28	7	309679	229	0.1873	280	507	772	805	208	377	574	598	191	346	527	550	
180	189.81	6	306724	203	0.1849	280	477	772	759	208	355	574	564	191	326	527	518	
200	209.11	6	300740	181	0.1824	280	468	772	744	208	348	574	553	191	320	527	508	**E4B** x4
224	237.17	5	306724	163	0.1079	280	436	772	693	208	324	574	515	191	298	527	473	
250	264.38	5	300740	143	0.1066	280	411	772	654	208	306	574	486	191	281	527	446	
280	291.27	4	300740	130	0.1054	280	404	772	642	208	300	574	477	191	276	527	438	
315	340.56	4	306724	113	0.0578	280	369	772	577	208	270	574	429	191	248	527	394	
355	379.62	3	300740	100	0.0572	280	364	772	545	208	255	574	405	191	234	527	373	
400	418.23	3	294814	89	0.0565	280	364	772	538	208	249	574	396	191	229	527	364	
450	460.05	3	283139	77	0.0562	280	364	772	527	208	237	574	377	191	218	527	346	

E3B / E4B ..56 SPLIT HOUSING 60 Hz 310 kNm

	i_N	i_{eff}	n_2 [rpm]	T_{2N} [Nm]	P_N [kW]	J [Kgm²]	R1 P_{t0} [kW]	R1	R1 H_2O	R1 $+H_2O$	S5 P_{t0} [kW]	S5	S5 H_2O	S5 $+H_2O$	T6 P_{t0} [kW]	T6	T6 H_2O	T6 $+H_2O$	Type
n_1 = 1800 rpm	**12.5**	12.71	142	148222	2198	5.2589	412	1301	1019	1894	306	967	757	1407	281	889	696	1294	
	14	14.44	125	167556	2187	4.5970	412	1301	1019	1894	306	967	757	1407	281	889	696	1294	
	16	15.74	114	183667	2200	4.1348	412	1301	1019	1894	306	967	757	1407	281	889	696	1294	
	18	18.06	100	209444	2186	3.6926	412	1301	1019	1894	306	967	757	1407	281	889	696	1294	
	20	20.56	88	240056	2201	3.3682	412	1301	1019	1894	306	967	757	1407	281	889	696	1294	
	22.4	22.64	80	264222	2200	3.1500	412	1301	1019	1894	306	967	757	1407	281	889	696	1294	
	25	25.87	70	307614	2241	2.9170	431	1363	1052	1984	321	1013	782	1474	295	931	719	1355	
	28	28.84	62	307614	2010	2.8132	403	1274	1001	1854	300	946	744	1377	275	870	684	1266	
	31.5	31.77	57	307614	1825	2.7051	401	1267	1004	1845	298	942	746	1371	274	866	686	1260	**E3B**
	35.5	37.15	48	307614	1561	1.4882	381	1204	993	1752	283	894	738	1302	260	822	678	1197	x3
	40	41.41	43	307614	1400	1.4379	366	1126	993	1639	272	836	738	1217	250	769	678	1119	
	45	45.63	39	307614	1271	1.3855	367	1119	993	1629	272	831	738	1210	250	764	678	1112	
	50	51.75	35	307614	1120	0.8568	360	1021	993	1487	267	759	738	1105	246	698	678	1015	
	56	57.68	31	309679	1012	0.8308	360	960	993	1399	267	713	738	1039	246	655	678	955	
	63	63.55	28	309679	918	0.8038	360	953	993	1400	267	708	738	1040	246	651	678	956	
	71	74.30	24	309679	786	0.4591	360	881	993	1342	267	654	738	997	246	601	678	917	
	80	82.83	22	309679	705	0.4465	360	823	993	1333	267	612	738	990	246	562	678	910	
	90	91.25	20	306724	634	0.4334	360	809	993	1333	267	601	738	990	246	553	678	910	
	100	100.38	18	294814	554	0.4255	360	764	993	1333	267	568	738	990	246	522	678	910	
	112	118.59	15	309679	492	0.3421	280	705	772	1027	208	524	574	763	191	482	527	701	
	125	132.19	14	306724	437	0.3371	280	663	772	964	208	492	574	717	191	453	527	659	
	140	145.63	12	306724	397	0.3320	280	652	772	948	208	484	574	705	191	445	527	648	
	160	170.28	11	309679	343	0.1873	280	627	772	912	208	466	574	678	191	428	527	623	
	180	189.81	9	306724	305	0.1849	280	589	772	858	208	438	574	637	191	402	527	586	
	200	209.11	9	300740	271	0.1824	280	577	772	840	208	429	574	624	191	394	527	574	**E4B**
	224	237.17	8	306724	244	0.1079	280	541	772	788	208	402	574	586	191	370	527	538	x4
	250	264.38	7	300740	214	0.1066	280	509	772	741	208	378	574	551	191	348	527	506	
	280	291.27	6	300740	195	0.1054	280	502	772	727	208	371	574	540	191	341	527	497	
	315	340.56	5	306724	170	0.0578	280	490	772	664	208	336	574	489	191	309	527	449	
	355	379.62	5	300740	149	0.0572	280	490	772	651	208	316	574	460	191	291	527	423	
	400	418.23	4	294814	133	0.0565	280	490	772	651	208	309	574	449	191	284	527	413	
	450	460.05	4	283139	116	0.0562	280	490	772	651	208	292	574	426	191	269	527	391	

DANA
BREVINI®
Motion Systems

MONOBLOCK HOUSING - sizes from 18 to 31

Type		Mounting position	Page
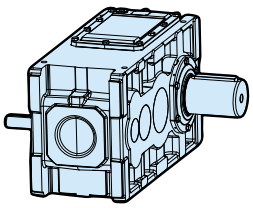 Helical gear units	E2H	R1	205
		S5	206
		T6	207
	E3H	R1	209
		S5	210
		T6	211
	E4H	R1	213
		S5	214
		T6	215
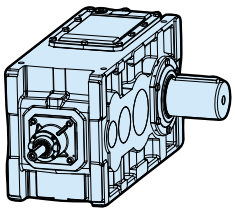 Bevel-helical gear units	E3B	R1	217
		S5	218
		T6	219
	E4B	R1	221
		S5	222
		T6	223
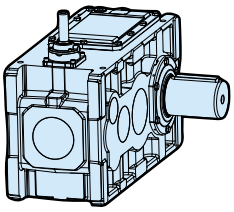 Compact drives	E3C	R1	225
		S5	226
		T6	227
	E4C	R1	229
		S5	230
		T6	231

R1 : Horizontal, output shaft horizontal
S5 : Vertical, output shaft below
T6 : Vertical, output shaft above

DANA
BREVINI®
Motion Systems

E2H ... -R1 MONOBLOCK HOUSING

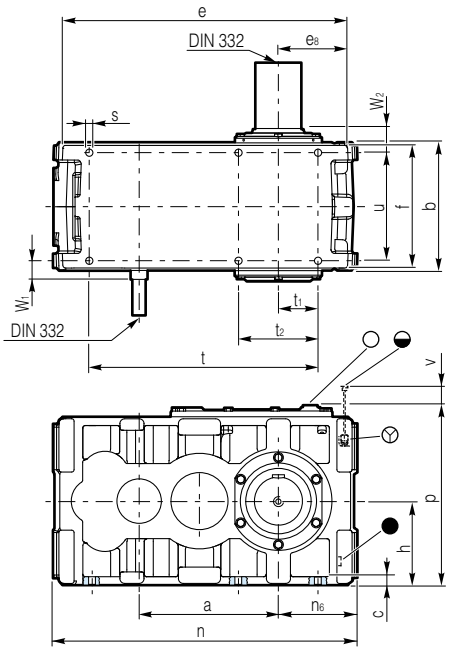

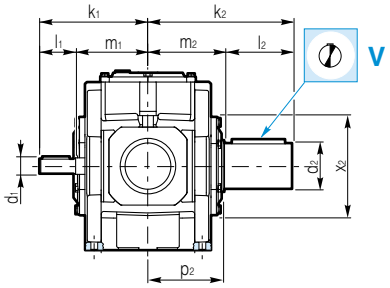

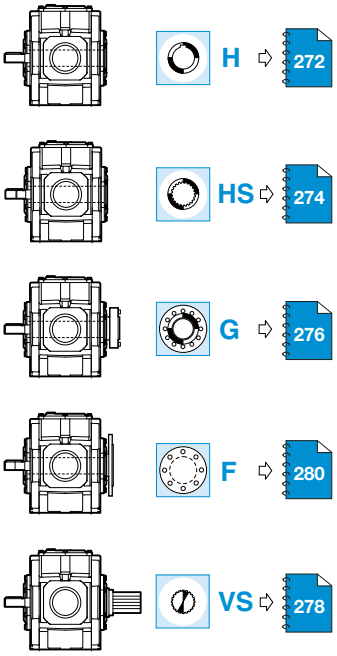

	Input shaft				Output shaft				
	Ø d_1	k_1	l_1	m_1	Ø d_2	k_2	l_2	m_2	Ø x_2
E2H 18	45 k6	275	120	155	95 m6	350	170	180	–
E2H 19	45 k6	275	120	155	95 m6	350	170	180	–
E2H 20	45 k6	275	120	155	120 m6	370	190	180	–
E2H 22	60 m6	337	140	197	130 m6	405	190	215	–
E2H 25	60 m6	337	140	197	145 m6	450	230	220	296
E2H 26	70 m6	369	140	229	145 m6	480	230	250	296
E2H 28	70 m6	369	140	229	160 m6	480	230	250	328
E2H 31	70 m6	369	140	229	175 m6	540	290	250	348

	Housing										
	a	b	c	e	e_8	f	h -0.2	n	n_6	p	p_2
E2H 18	293	294	18	622	155	284	190	654	171	419	–
E2H 19	324	294	18	687	186	284	202	716	202	443	–
E2H 20	347	294	18	732	211	284	225	764	227	489	–
E2H 22	376	358	24	782	193	346	235	826	215	513	–
E2H 25	434	358	24	896	249	346	265	940	271	573	204
E2H 26	464	420	28	948	230	408	280	1000	256	610	246
E2H 28	464	420	28	948	230	408	280	1000	256	610	246
E2H 31	532	420	28	1085	299	408	315	1137	325	680	239

	Fitting										
	Ø s	d_s x l_{max}	t	t_1	t_2	u	w_1	w_2	v	OIL [l]	Kg *
E2H 18	14.5	M12x55	486	87	175	248	31	56	45	15	250
E2H 19	14.5	M12x55	548	118	237	248	31	56	65	17	290
E2H 20	14.5	M12x90	596	143	285	248	31	56	70	20	340
E2H 22	18.5	M16x65	622	113	226	306	44	62	60	28	455
E2H 25	18.5	M16x90	736	169	340	306	44	67	100	37	605
E2H 26	24	M20x80	752	132	265	360	49	70	80	49	745
E2H 28	24	M20x80	752	132	265	360	49	70	80	48	755
E2H 31	24	M20x110	889	201	402	360	49	70	90	66	1075

***Provided weight values are without oil filling and may differ slightly according to specific product configuration.**
Dimensions l., m. and w. for grease lubricated labyrinth seals, on request.

E2H ... -S5 MONOBLOCK HOUSING

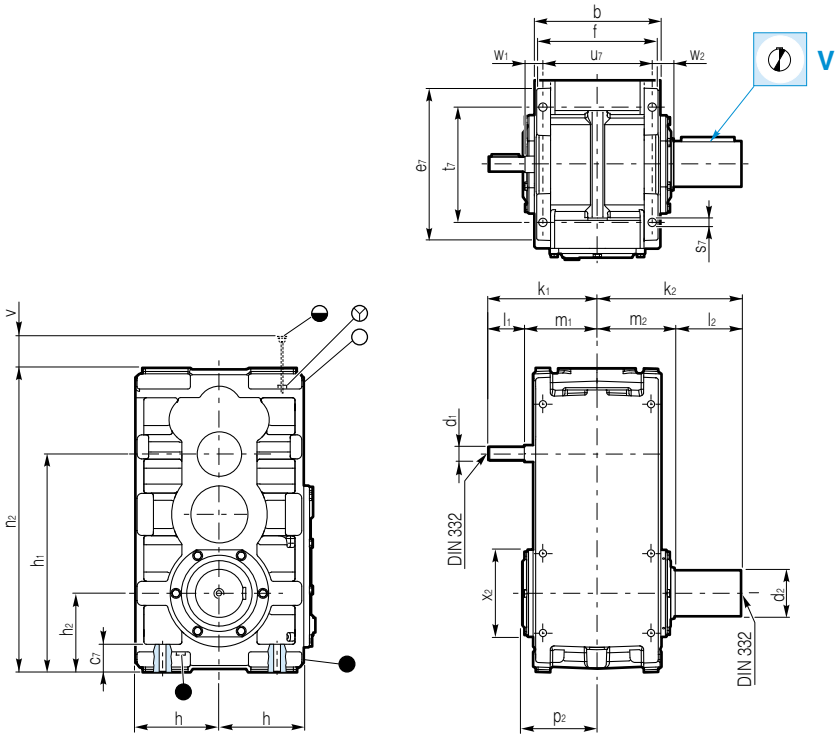

H 272
HS 274
G 276
F 280
VS 278

	Input shaft				Output shaft				
	Ø d_1	k_1	l_1	m_1	Ø d_2	k_2	l_2	m_2	Ø x_2
E2H 18	45 k6	275	120	155	95 m6	350	170	180	–
E2H 19	45 k6	275	120	155	95 m6	350	170	180	–
E2H 20	45 k6	275	120	155	120 m6	370	190	180	–
E2H 22	60 m6	337	140	197	130 m6	405	190	215	–
E2H 25	60 m6	337	140	197	145 m6	450	230	220	296
E2H 26	70 m6	369	140	229	145 m6	480	230	250	296
E2H 28	70 m6	369	140	229	160 m6	480	230	250	328
E2H 31	70 m6	369	140	229	175 m6	540	290	250	348

	Housing								
	b	c_7	e_7	f	h -0.2	h_1	h_2 -0.2	n_2	p_2
E2H 18	294	62	348	284	190	464	171	654	–
E2H 19	294	62	373	284	202	526	202	716	–
E2H 20	294	62	414	284	225	574	227	764	–
E2H 22	358	76	426	346	235	591	215	826	–
E2H 25	358	77	486	346	265	705	271	940	204
E2H 26	420	86	504	408	280	720	256	1000	246
E2H 28	420	86	504	408	280	720	256	1000	246
E2H 31	420	95	574	408	315	857	325	1137	239

	Fitting								
	Ø s_7	d_s x l_{max}	t_7	u_7	w_1	w_2	v	OIL [l]	Kg *
E2H 18	16.5	M14x100	260	258	26	51	160	26	250
E2H 19	16.5	M14x100	284	258	26	51	160	30	290
E2H 20	16.5	M14x100	330	258	26	51	160	35	340
E2H 22	24	M20x130	326	312	41	59	195	46	455
E2H 25	24	M20x130	384	312	41	64	195	63	605
E2H 26	28	M24x150	386	366	46	67	215	80	745
E2H 28	28	M24x150	386	366	46	67	215	78	755
E2H 31	28	M24x160	456	366	46	67	215	113	1075

***Provided weight values are without oil filling and may differ slightly according to specific product configuration.**
Dimensions l., m. and w. for grease lubricated labyrinth seals, on request.

E2H ... -T6 MONOBLOCK HOUSING

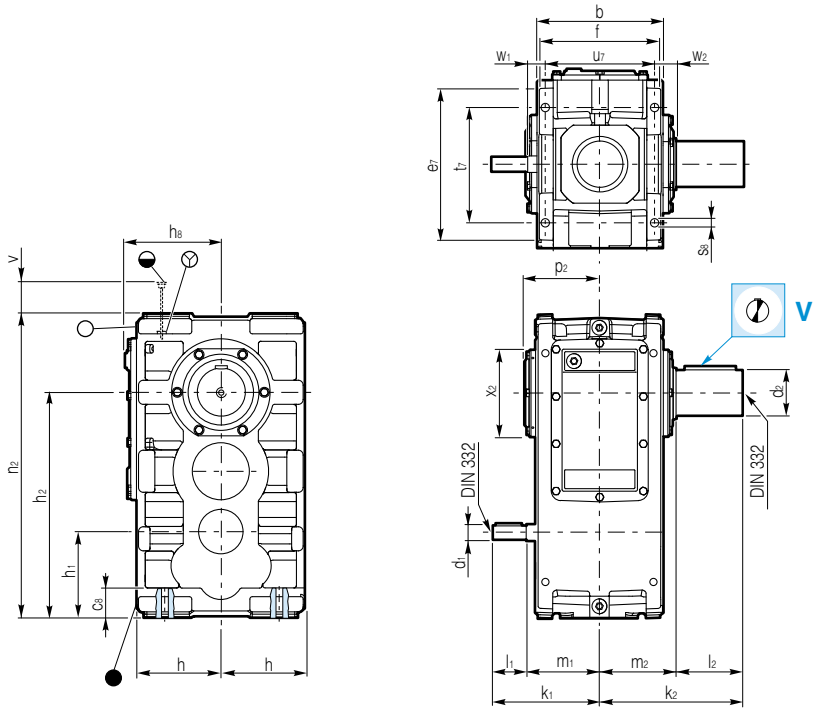

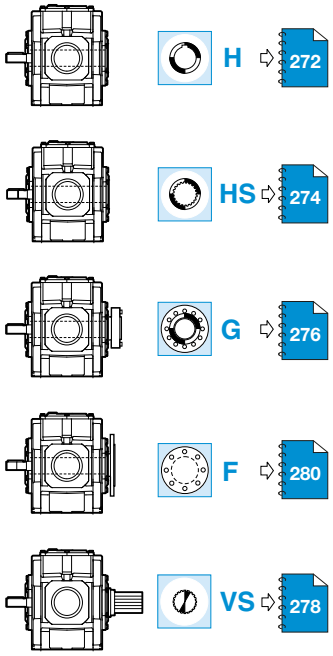

	Input shaft				Output shaft				
	Ø d_1	k_1	l_1	m_1	Ø d2	k_2	l_2	m_2	Ø x_2
E2H 18	45 k6	275	120	155	95 m6	350	170	180	–
E2H 19	45 k6	275	120	155	95 m6	350	170	180	–
E2H 20	45 k6	275	120	155	120 m6	370	190	180	–
E2H 22	60 m6	337	140	197	130 m6	405	190	215	–
E2H 25	60 m6	337	140	197	145 m6	450	230	220	296
E2H 26	70 m6	369	140	229	145 m6	480	230	250	296
E2H 28	70 m6	369	140	229	160 m6	480	230	250	328
E2H 31	70 m6	369	140	229	175 m6	540	290	250	348

	Housing									
	b	c_8	e_7	f	h -0.2	h_1	h_2 -0.2	h_8	n_2	p_2
E2H 18	294	64	348	284	190	190	483	229	654	–
E2H 19	294	64	373	284	202	190	514	241	716	–
E2H 20	294	64	414	284	225	190	537	264	764	–
E2H 22	358	76	426	346	235	235	611	278	826	–
E2H 25	358	77	486	346	265	235	669	308	940	204
E2H 26	420	92	504	408	280	280	744	330	1000	246
E2H 28	420	92	504	408	280	280	744	330	1000	246
E2H 31	420	95	574	408	315	280	812	365	1137	239

	Fitting								
	Ø s_8	d_s x l_{max}	t_7	u_7	w_1	w_2	v	[l]	*
E2H 18	16.5	M14x100	260	258	26	51	150	26	250
E2H 19	16.5	M14x100	284	258	26	51	200	28	290
E2H 20	16.5	M14x100	330	258	26	51	220	33	340
E2H 22	24	M20x130	326	312	41	59	190	48	455
E2H 25	24	M20x130	384	312	41	64	260	61	605
E2H 26	28	M24x150	386	366	46	67	230	84	745
E2H 28	28	M24x150	386	366	46	67	230	83	755
E2H 31	28	M24x160	456	366	46	67	290	129	1075

***Provided weight values are without oil filling and may differ slightly according to specific product configuration.**
Dimensions l., m. and w. for grease lubricated labyrinth seals, on request.

DANA
BREVINI®
Motion Systems

E3H ... -R1 MONOBLOCK HOUSING

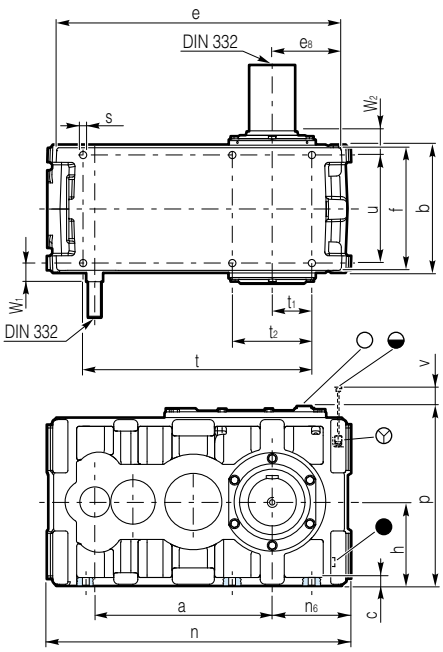

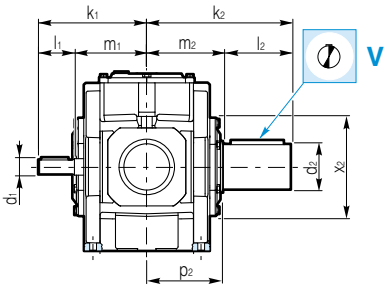

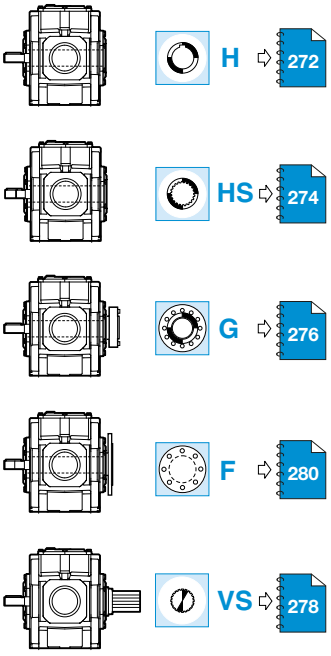

	Input shaft									Output shaft				
	i_N	Ø d_1	k_1	l_1	i_N	Ø d_1	k_1	l_1	m_1	Ø d_2	k_2	l_2	m_2	Ø x_2
E3H 18	16...45	35 k6	283	100	50...100	30 k6	283	100	183	95 m6	350	170	180	–
E3H 19	20...56	35 k6	283	100	63...125	30 k6	283	100	183	95 m6	350	170	180	–
E3H 20	22.4...63	35 k6	283	100	71...140	30 k6	283	100	183	120 m6	370	190	180	–
E3H 22	20...45	50 k6	347	120	50...71	40 k6	347	120	227	130 m6	405	190	215	–
E3H 25	25...56	50 k6	347	120	63...90	40 k6	347	120	227	145 m6	450	230	220	296
E3H 26	16...45	50 k6	362	120	50...100	40 k6	362	120	242	145 m6	480	230	250	296
E3H 28	16...45	50 k6	362	120	50...100	40 k6	362	120	242	160 m6	480	230	250	328
E3H 31	22.4...63	50 k6	362	120	71...140	40 k6	362	120	242	175 m6	540	290	250	348

	Housing										
	a	b	c	e	e_8	f	h -0.2	n	n_6	p	p_2
E3H 18	387	294	18	622	155	284	190	654	171	419	–
E3H 19	418	294	18	687	186	284	202	716	202	443	–
E3H 20	441	294	18	732	211	284	225	764	227	489	–
E3H 22	492	358	24	782	193	346	235	826	215	513	–
E3H 25	550	358	24	896	249	346	265	940	271	573	204
E3H 26	591	420	28	949	230	408	280	1000	256	610	246
E3H 28	591	420	28	949	230	408	280	1000	256	610	246
E3H 31	659	420	28	1085	299	408	315	1137	325	680	239

	Fitting										
	Ø s	d_s x l_{max}	t	t_1	t_2	u	w_1	w_2	v	[l]	*
E3H 18	14.5	M12x55	486	87	175	248	59	56	40	15	255
E3H 19	14.5	M12x55	548	118	237	248	59	56	60	18	295
E3H 20	14.5	M12x90	596	143	285	248	59	56	65	21	350
E3H 22	18.5	M16x65	622	113	226	306	74	62	55	28	475
E3H 25	18.5	M16x90	736	169	340	306	74	67	95	37	625
E3H 26	24	M20x80	752	132	265	360	62	70	65	50	770
E3H 28	24	M20x80	752	132	265	360	62	70	65	49	780
E3H 31	24	M20x110	889	201	402	360	62	70	75	67	1095

***Provided weight values are without oil filling and may differ slightly according to specific product configuration.**
Dimensions l., m. and w. for grease lubricated labyrinth seals, on request.

E3H ... -S5

MONOBLOCK HOUSING

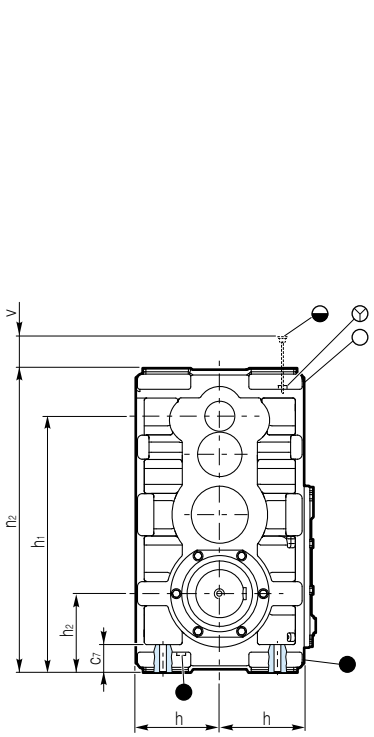

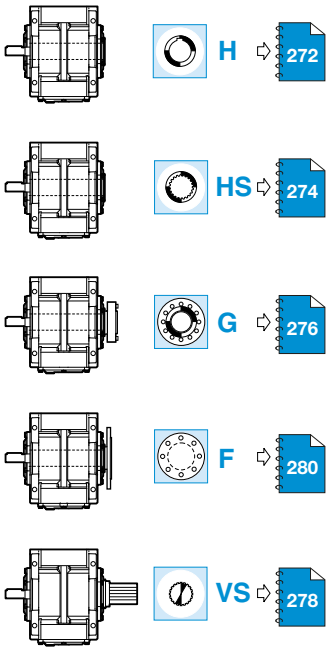

	Input shaft									Output shaft				
	i_N	Ø d_1	k_1	l_1	i_N	Ø d_1	k_1	l_1	m_1	Ø d_2	k_2	l_2	m_2	Ø x_2
E3H 18	16...45	35 k6	283	100	50...100	30 k6	283	100	183	95 m6	350	170	180	–
E3H 19	20...56	35 k6	283	100	63...125	30 k6	283	100	183	95 m6	350	170	180	–
E3H 20	22.4...63	35 k6	283	100	71...140	30 k6	283	100	183	120 m6	370	190	180	–
E3H 22	20...45	50 k6	347	120	50...71	40 k6	347	120	227	130 m6	405	190	215	–
E3H 25	25...56	50 k6	347	120	63...90	40 k6	347	120	227	145 m6	450	230	220	296
E3H 26	16...45	50 k6	362	120	50...100	40 k6	362	120	242	145 m6	480	230	250	296
E3H 28	16...45	50 k6	362	120	50...100	40 k6	362	120	242	160 m6	480	230	250	328
E3H 31	22.4...63	50 k6	362	120	71...140	40 k6	362	120	242	175 m6	540	290	250	348

	Housing								
	b	c_7	e_7	f	h -0.2	h_1	h_2 -0.2	n_2	p_2
E3H 18	294	62	348	284	190	558	171	654	–
E3H 19	294	62	373	284	202	620	202	716	–
E3H 20	294	62	414	284	225	668	227	764	–
E3H 22	358	76	426	346	235	707	215	826	–
E3H 25	358	77	486	346	265	821	271	940	204
E3H 26	420	86	504	408	280	847	256	1000	246
E3H 28	420	86	504	408	280	847	256	1000	246
E3H 31	420	95	574	408	315	984	325	1137	239

	Fitting								
	Ø s_7	d_s x l_{max}	t_7	u_7	w_1	w_2	v	OIL [l]	Kg *
E3H 18	16.5	M14x100	260	258	54	51	55	31	255
E3H 19	16.5	M14x100	284	258	54	51	55	35	295
E3H 20	16.5	M14x100	330	258	54	51	55	42	350
E3H 22	24	M20x130	326	312	71	59	65	56	475
E3H 25	24	M20x130	384	312	71	64	65	77	625
E3H 26	28	M24x150	386	366	59	67	70	97	770
E3H 28	28	M24x150	386	366	59	67	70	95	780
E3H 31	28	M24x160	456	366	59	67	70	135	1095

***Provided weight values are without oil filling and may differ slightly according to specific product configuration.**
Dimensions l., m. and w. for grease lubricated labyrinth seals, on request.

E3H ... -T6 MONOBLOCK HOUSING

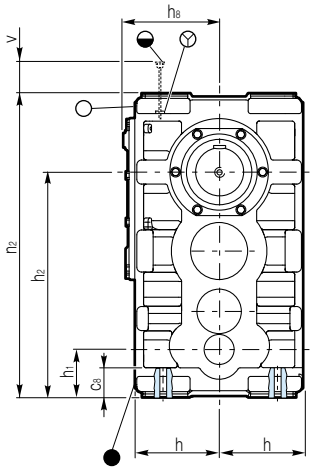

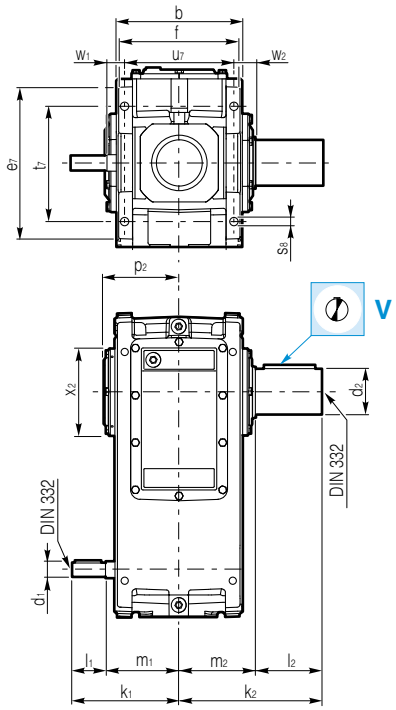

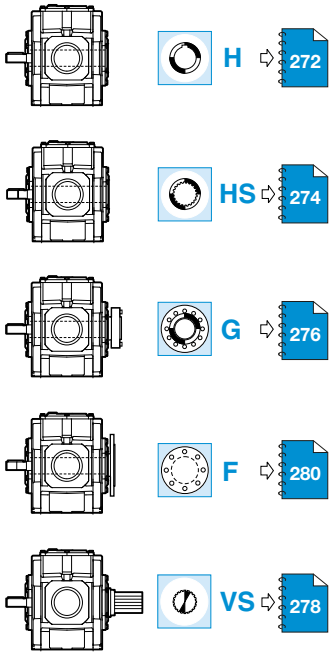

	Input shaft									Output shaft				
	i_N	Ø d_1	k_1	l_1	i_N	Ø d_1	k_1	l_1	m_1	Ø d_2	k_2	l_2	m_2	Ø x_2
E3H 18	16...45	35 k6	283	100	50...100	30 k6	283	100	183	95 m6	350	170	180	–
E3H 19	20...56	35 k6	283	100	63...125	30 k6	283	100	183	95 m6	350	170	180	–
E3H 20	22.4...63	35 k6	283	100	71...140	30 k6	283	100	183	120 m6	370	190	180	–
E3H 22	20...45	50 k6	347	120	50...71	40 k6	347	120	227	130 m6	405	190	215	–
E3H 25	25...56	50 k6	347	120	63...90	40 k6	347	120	227	145 m6	450	230	220	296
E3H 26	16...45	50 k6	362	120	50...100	40 k6	362	120	242	145 m6	480	230	250	296
E3H 28	16...45	50 k6	362	120	50...100	40 k6	362	120	242	160 m6	480	230	250	328
E3H 31	22.4...63	50 k6	362	120	71...140	40 k6	362	120	242	175 m6	540	290	250	348

	Housing									
	b	c_8	e_7	f_7	h -0.2	h_1	h_2 -0.2	h_8	n_2	p_2
E3H 18	294	64	348	284	190	96	483	229	654	–
E3H 19	294	64	373	284	202	96	514	241	716	–
E3H 20	294	64	414	284	225	96	537	264	764	–
E3H 22	358	76	426	346	235	119	611	278	826	–
E3H 25	358	77	486	346	265	119	669	308	940	204
E3H 26	420	92	504	408	280	153	744	330	1000	246
E3H 28	420	92	504	408	280	153	744	330	1000	246
E3H 31	420	94	574	408	315	153	812	365	1137	239

	Fitting								
	Ø s_8	d_s x l_{max}	t_7	u_7	w_1	w_2	v	OIL [l]	Kg *
E3H 18	16.5	M14x100	260	258	54	51	150	25	255
E3H 19	16.5	M14x100	284	258	54	51	200	27	295
E3H 20	16.5	M14x100	330	258	54	51	220	32	350
E3H 22	24	M20x130	326	312	71	59	190	47	475
E3H 25	24	M20x130	384	312	71	64	260	59	625
E3H 26	28	M24x150	386	366	59	67	230	81	770
E3H 28	28	M24x150	386	366	59	67	230	80	780
E3H 31	28	M24x160	456	366	59	67	290	104	1095

***Provided weight values are without oil filling and may differ slightly according to specific product configuration.**
Dimensions l., m. and w. for grease lubricated labyrinth seals, on request.

DANA
BREVINI®
Motion Systems

E4H ... -R1 MONOBLOCK HOUSING

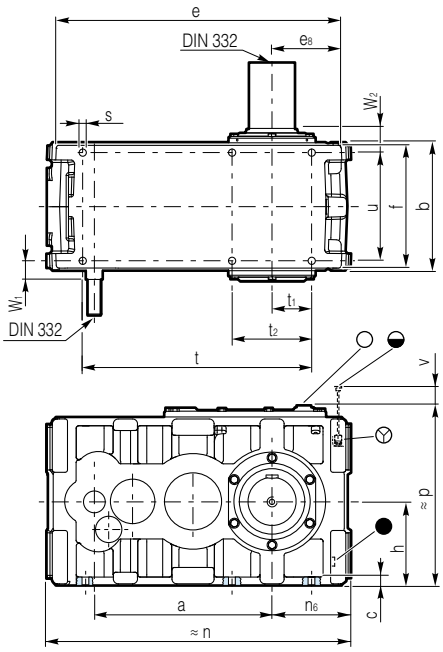

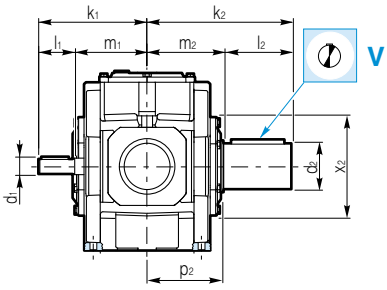

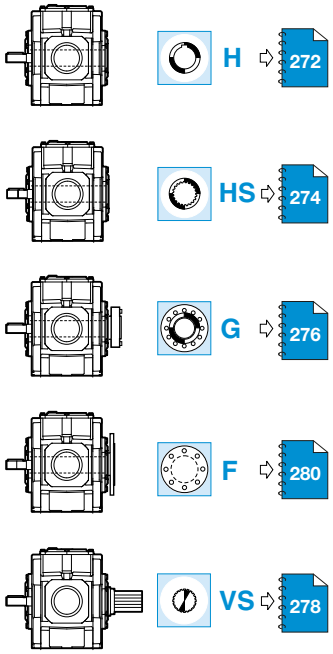

	Input shaft									Output shaft				
	i_N	Ø d_1	k_1	l_1	i_N	Ø d_1	k_1	l_1	m_1	Ø d_2	k_2	l_2	m_2	Ø x_2
E4H 18	90...315	25 k6	227	72	–	–	–	–	155	95 m6	350	170	180	–
E4H 19	112...400	25 k6	227	72	–	–	–	–	155	95 m6	350	170	180	–
E4H 20	125...450	25 k6	227	72	–	–	–	–	155	120 m6	370	190	180	–
E4H 22	71...200	35 k6	307	100	224...450	30 k6	307	100	207	130 m6	405	190	215	–
E4H 25	90...250	35 k6	307	100	280...560	30 k6	307	100	207	145 m6	450	230	220	296
E4H 26	71...450	35 k6	319	100	–	–	–	–	219	145 m6	480	230	250	296
E4H 28	71...450	35 k6	319	100	–	–	–	–	219	160 m6	480	230	250	328
E4H 31	100...630	35 k6	319	100	–	–	–	–	219	175 m6	540	290	250	348

	Housing										
	a	b	c	e	e_8	f	h -0.2	n	n_6	p	p_2
E4H 18	387	294	18	622	155	284	190	654	171	419	–
E4H 19	418	294	18	687	186	284	202	716	202	443	–
E4H 20	441	294	18	732	211	284	225	764	227	489	–
E4H 22	492	358	24	782	193	346	235	826	215	513	–
E4H 25	550	358	24	896	249	346	265	940	271	573	204
E4H 26	591	420	28	948	230	408	280	1000	256	610	246
E4H 28	591	420	28	948	230	408	280	1000	256	610	246
E4H 31	659	420	28	1085	299	408	315	1137	325	680	239

	Fitting										
	Ø s	d_s x l_{max}	t	t_1	t_2	u	w_1	w_2	v	[l]	* kg
E4H 18	14.5	M12x55	486	87	175	248	31	56	30	16	260
E4H 19	14.5	M12x55	548	118	237	248	31	56	50	18	300
E4H 20	14.5	M12x90	596	143	285	248	31	56	55	21	355
E4H 22	18.5	M16x65	622	113	226	306	54	62	45	29	480
E4H 25	18.5	M16x90	736	169	340	306	54	67	85	38	630
E4H 26	24	M20x80	752	132	265	360	39	70	50	51	785
E4H 28	24	M20x80	752	132	265	360	39	70	50	50	795
E4H 31	24	M20x110	889	201	402	360	39	70	60	69	1115

***Provided weight values are without oil filling and may differ slightly according to specific product configuration.**
Dimensions l., m. and w. for grease lubricated labyrinth seals, on request.

E4H... -S5 MONOBLOCK HOUSING

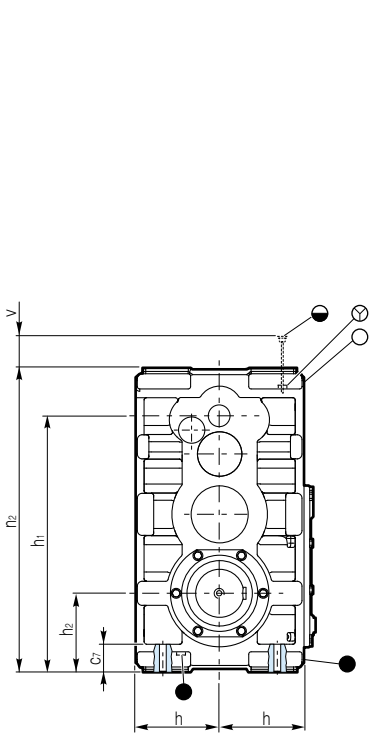

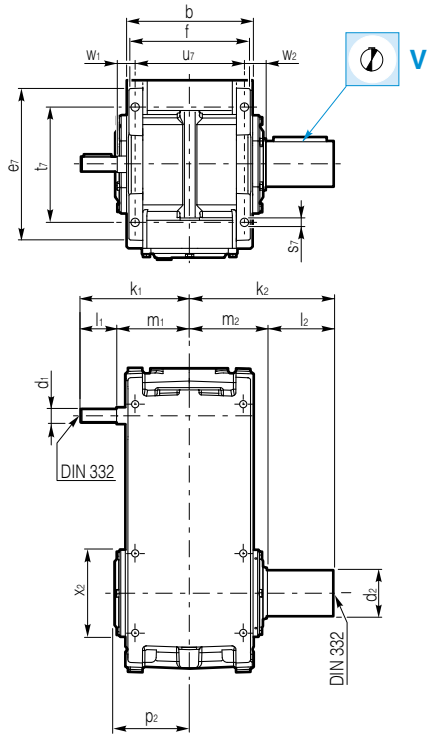

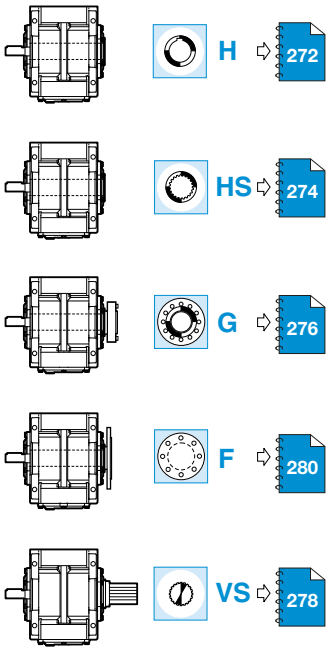

	Input shaft									Output shaft				
	i_N	Ø d_1	k_1	l_1	i_N	Ø d_1	k_1	l_1	m_1	Ø d_2	k_2	l_2	m_2	Ø x_2
E4H 18	90...315	25 k6	227	72	–	–	–	–	155	95 m6	350	170	180	–
E4H 19	112...400	25 k6	227	72	–	–	–	–	155	95 m6	350	170	180	–
E4H 20	125...450	25 k6	227	72	–	–	–	–	155	120 m6	370	190	180	–
E4H 22	71...200	35 k6	307	100	224...450	30 k6	307	100	207	130 m6	405	190	215	–
E4H 25	90...250	35 k6	307	100	280...560	30 k6	307	100	207	145 m6	450	230	220	296
E4H 26	71...450	35 k6	319	100	–	–	–	–	219	145 m6	480	230	250	296
E4H 28	71...450	35 k6	319	100	–	–	–	–	219	160 m6	480	230	250	328
E4H 31	100...630	35 k6	319	100	–	–	–	–	219	175 m6	540	290	250	348

	Housing								
	b	c_7	e_7	f	h -0.2	h_1	h_2 -0.2	n_2	p_2
E4H 18	294	62	348	284	190	558	171	654	–
E4H 19	294	62	373	284	202	620	202	716	–
E4H 20	294	62	414	284	225	668	227	764	–
E4H 22	358	76	426	346	235	707	215	826	–
E4H 25	358	77	486	346	265	821	271	940	204
E4H 26	420	86	504	408	280	847	256	1000	246
E4H 28	420	86	504	408	280	847	256	1000	246
E4H 31	420	95	574	408	315	984	325	1137	239

	Fitting								
	Ø s_7	d_s x l_{max}	t_7	u_7	w_1	w_2	v	OIL [l]	Kg *
E4H 18	16.5	M14x100	260	258	26	51	50	32	260
E4H 19	16.5	M14x100	284	258	26	51	50	36	300
E4H 20	16.5	M14x100	330	258	26	51	50	43	355
E4H 22	24	M20x130	326	312	51	59	60	58	480
E4H 25	24	M20x130	384	312	51	64	60	77	630
E4H 26	28	M24x150	386	366	36	67	60	101	785
E4H 28	28	M24x150	386	366	36	67	60	99	795
E4H 31	28	M24x160	456	366	36	67	60	139	1115

***Provided weight values are without oil filling and may differ slightly according to specific product configuration.**
Dimensions l., m. and w. for grease lubricated labyrinth seals, on request.

E4H... -T6 MONOBLOCK HOUSING

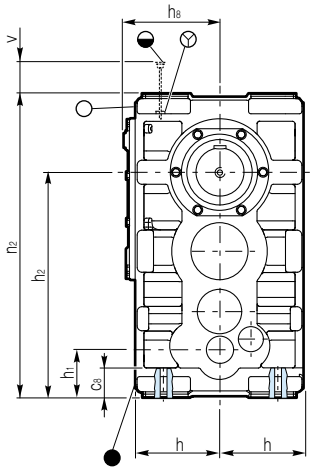

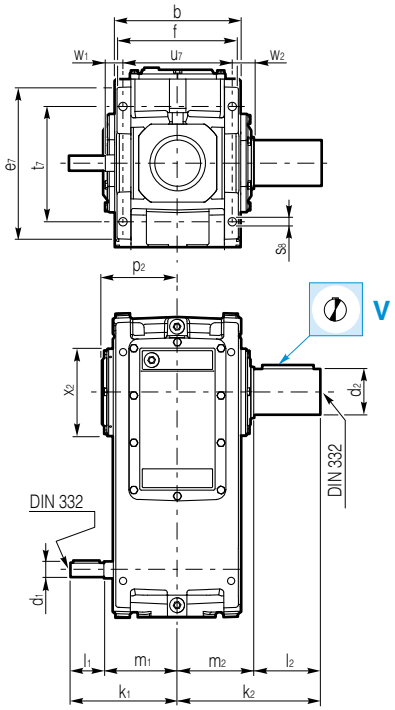

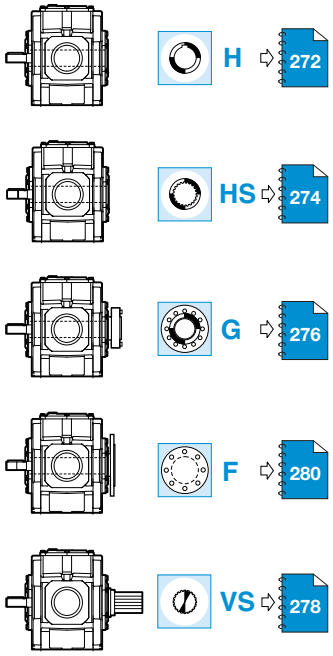

	Input shaft									Output shaft				
	i_N	Ø d_1	k_1	l_1	i_N	Ø d_1	k_1	l_1	m_1	Ø d_2	k_2	l_2	m_2	Ø x_2
E4H 18	90...315	25 k6	227	72	–	–	–	–	155	95 m6	350	170	180	–
E4H 19	112...400	25 k6	227	72	–	–	–	–	155	95 m6	350	170	180	–
E4H 20	125...450	25 k6	227	72	–	–	–	–	155	120 m6	370	190	180	–
E4H 22	71...200	35 k6	307	100	224...450	30 k6	307	100	207	130 m6	405	190	215	–
E4H 25	90...250	35 k6	307	100	280...560	30 k6	307	100	207	145 m6	450	230	220	296
E4H 26	71...450	35 k6	319	100	–	–	–	–	219	145 m6	480	230	250	296
E4H 28	71...450	35 k6	319	100	–	–	–	–	219	160 m6	480	230	250	328
E4H 31	100...630	35 k6	319	100	–	–	–	–	219	175 m6	540	290	250	348

	Housing									
	b	c_8	e_7	f	h -0.2	h_1	h_2 -0.2	h_8	n_2	p_2
E4H 18	294	64	348	284	190	96	483	229	654	–
E4H 19	294	64	373	284	202	96	514	241	716	–
E4H 20	294	64	414	284	225	96	537	264	764	–
E4H 22	358	76	426	346	235	119	611	278	826	–
E4H 25	358	77	486	346	265	119	669	308	940	204
E4H 26	420	92	504	408	280	153	744	330	1000	246
E4H 28	420	92	504	408	280	153	744	330	1000	246
E4H 31	420	94	574	408	315	153	812	365	1137	239

	Fitting								
	Ø s_8	d_s x l_{max}	t_7	u_7	w_1	w_2	v	[l]	* Kg
E4H 18	16.5	M14x100	260	258	26	51	150	24	260
E4H 19	16.5	M14x100	284	258	26	51	200	27	300
E4H 20	16.5	M14x100	330	258	26	51	220	32	355
E4H 22	24	M20x130	326	312	51	59	190	46	480
E4H 25	24	M20x130	384	312	51	64	260	58	630
E4H 26	28	M24x150	386	366	36	67	230	80	785
E4H 28	28	M24x150	386	366	36	67	230	79	795
E4H 31	28	M24x160	456	366	36	67	290	104	1115

***Provided weight values are without oil filling and may differ slightly according to specific product configuration.**
Dimensions l., m. and w. for grease lubricated labyrinth seals, on request.

DANA
BREVINI®
Motion Systems

E3B... -R1 MONOBLOCK HOUSING

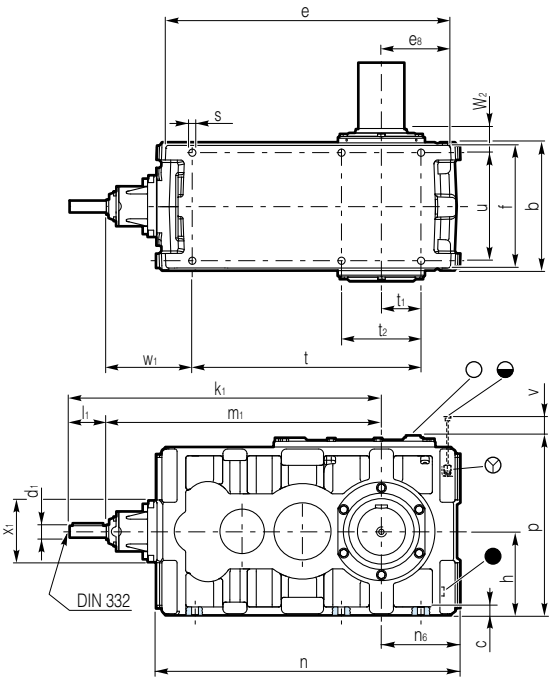

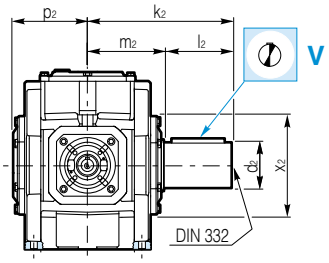

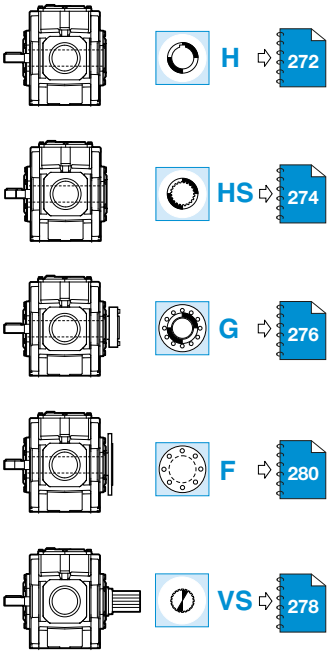

	Input shaft					Output shaft				
	Ø d_1	k_1	l_1	m_1	Ø x_1	Ø d_2	k_2	l_2	m_2	Ø x_2
E3B 18	40 k6	699	120	579	190	95 m6	350	170	180	–
E3B 19	40 k6	730	120	610	190	95 m6	350	170	180	–
E3B 20	40 k6	753	120	633	190	120 m6	370	190	180	–
E3B 22	50 k6	823	120	703	225	130 m6	405	190	215	–
E3B 25	50 k6	881	120	761	225	145 m6	450	230	220	296
E3B 26	60 m6	986	145	841	255	145 m6	480	230	250	296
E3B 28	60 m6	986	145	841	255	160 m6	480	230	250	328
E3B 31	60 m6	1054	145	909	255	175 m6	540	290	250	348

	Housing									
	b	c	e	e_8	f	h -0.2	n	n_6	p	p_2
E3B 18	294	18	622	155	284	190	654	171	419	–
E3B 19	294	18	687	186	284	202	716	202	443	–
E3B 20	294	18	732	211	284	225	764	227	489	–
E3B 22	358	24	782	193	346	235	826	215	513	–
E3B 25	358	24	896	249	346	265	940	271	573	204
E3B 26	420	28	948	230	408	280	1000	256	610	246
E3B 28	420	28	948	230	408	280	1000	256	610	246
E3B 31	420	28	1085	299	408	315	1137	325	680	239

	Fitting										
	Ø s	d_s x l_{max}	t	t_1	t_2	u	w_1	w_2	v	[l]	* Kg
E3B 18	14.5	M12x55	486	87	175	248	180	56	45	15	270
E3B 19	14.5	M12x55	548	118	237	248	180	56	65	17	315
E3B 20	14.5	M12x90	596	143	285	248	180	56	70	20	370
E3B 22	18.5	M16x65	622	113	226	306	194	62	60	28	495
E3B 25	18.5	M16x90	736	169	340	306	194	67	100	36	645
E3B 26	24	M20x80	752	132	265	360	221	70	80	49	820
E3B 28	24	M20x80	752	132	265	360	221	70	80	48	830
E3B 31	24	M20x110	889	201	402	360	221	70	90	65	1145

***Provided weight values are without oil filling and may differ slightly according to specific product configuration.**
Dimensions l., m. and w. for grease lubricated labyrinth seals, on request.

E3B... -S5 MONOBLOCK HOUSING

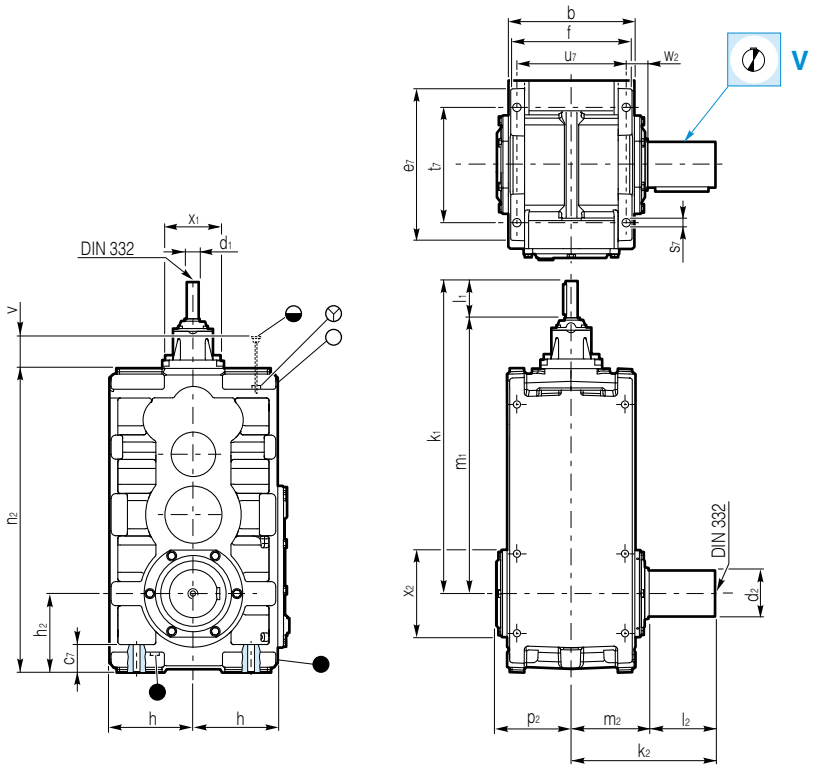

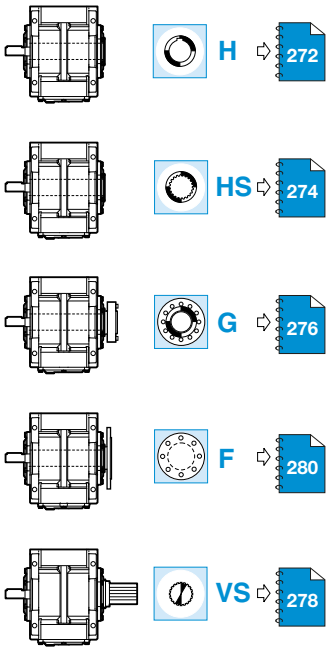

	Input shaft					Output shaft				
	Ø d_1	k_1	l_1	m_1	Ø x_1	Ø d_2	k_2	l_2	m_2	Ø x_2
E3B 18	40 k6	699	120	579	190	95 m6	350	170	180	–
E3B 19	40 k6	730	120	610	190	95 m6	350	170	180	–
E3B 20	40 k6	753	120	633	190	120 m6	370	190	180	–
E3B 22	50 k6	823	120	703	225	130 m6	405	190	215	–
E3B 25	50 k6	881	120	761	225	145 m6	450	230	220	296
E3B 26	60 m6	986	145	841	255	145 m6	480	230	250	296
E3B 28	60 m6	986	145	841	255	160 m6	480	230	250	328
E3B 31	60 m6	1054	145	909	255	175 m6	540	290	250	348

	Housing							
	b	c_7	e_7	f	h -0.2	h_2 -0.2	n_2	p_2
E3B 18	294	62	348	284	190	171	654	–
E3B 19	294	62	373	284	202	202	716	–
E3B 20	294	62	414	284	225	227	764	–
E3B 22	358	76	426	346	235	215	826	–
E3B 25	358	77	486	346	265	271	940	204
E3B 26	420	86	504	408	280	256	1000	246
E3B 28	420	86	504	408	280	256	1000	246
E3B 31	420	95	574	408	315	325	1137	239

	Fitting							
	Ø s_7	d_s x l_{max}	t_7	u_7	w_2	v	OIL [l]	Kg *
E3B 18	16.5	M14x100	260	258	51	160	25	270
E3B 19	16.5	M14x100	284	258	51	160	30	315
E3B 20	16.5	M14x100	330	258	51	160	35	370
E3B 22	24	M20x130	326	312	59	195	45	495
E3B 25	24	M20x130	384	312	64	195	62	645
E3B 26	28	M24x150	386	366	67	215	79	820
E3B 28	28	M24x150	386	366	67	215	77	830
E3B 31	28	M24x160	456	366	67	215	112	1145

***Provided weight values are without oil filling and may differ slightly according to specific product configuration.**
Dimensions l., m. and w. for grease lubricated labyrinth seals, on request. Additional lubrication required, please check back.

E3B... -T6 MONOBLOCK HOUSING

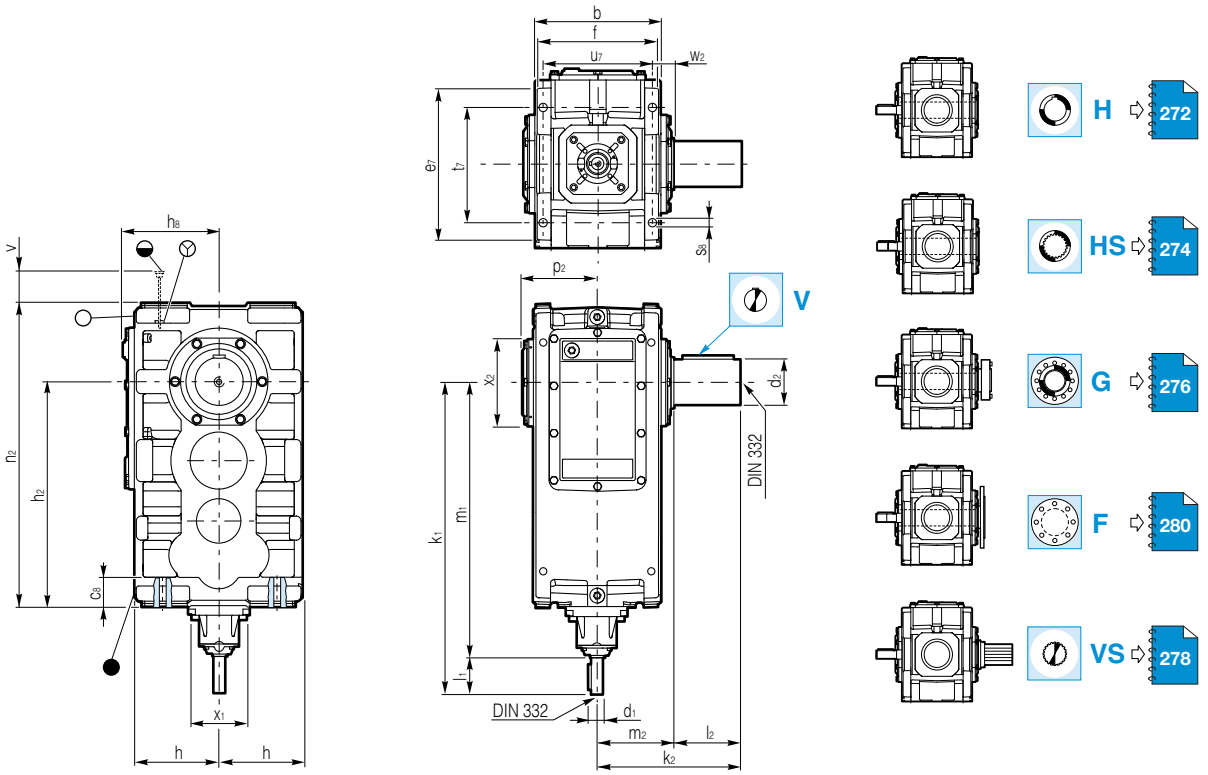

	Input shaft					Output shaft				
	Ø d_1	k_1	l_1	m_1	Ø x_1	Ø d_2	k_2	l_2	m_2	Ø x_2
E3B 18	40 k6	699	120	579	190	95 m6	350	170	180	–
E3B 19	40 k6	730	120	610	190	95 m6	350	170	180	–
E3B 20	40 k6	753	120	633	190	120 m6	370	190	180	–
E3B 22	50 k6	823	120	703	225	130 m6	405	190	215	–
E3B 25	50 k6	881	120	761	225	145 m6	450	230	220	296
E3B 26	60 m6	986	145	841	255	145 m6	480	230	250	296
E3B 28	60 m6	986	145	841	255	160 m6	480	230	250	328
E3B 31	60 m6	1054	145	909	255	175 m6	540	290	250	348

	Housing								
	b	c_8	e_7	f	h -0.2	h_2 -0.2	h_8	n_2	p_2
E3B 18	294	64	348	284	190	483	229	654	–
E3B 19	294	64	373	284	202	514	241	716	–
E3B 20	294	64	414	284	225	537	264	764	–
E3B 22	358	76	426	346	235	611	278	826	–
E3B 25	358	77	486	346	265	669	308	940	204
E3B 26	420	92	504	408	280	744	330	1000	246
E3B 28	420	92	504	408	280	744	330	1000	246
E3B 31	420	95	574	408	315	812	365	1137	239

	Fitting							
	Ø s_8	d_s x l_{max}	t_7	u_7	w_2	v	[l]	*
E3B 18	16.5	M14x100	260	258	51	150	25	270
E3B 19	16.5	M14x100	284	258	51	200	27	315
E3B 20	16.5	M14x100	330	258	51	220	32	370
E3B 22	24	M20x130	326	312	59	190	46	495
E3B 25	24	M20x130	384	312	64	260	59	645
E3B 26	28	M24x150	386	366	67	230	80	820
E3B 28	28	M24x150	386	366	67	230	79	830
E3B 31	28	M24x160	456	366	67	290	104	1145

***Provided weight values are without oil filling and may differ slightly according to specific product configuration.**
Dimensions l., m. and w. for grease lubricated labyrinth seals, on request. Additional lubrication required, please check back.

DANA
BREVINI®
Motion Systems

E4B ...-R1 MONOBLOCK HOUSING

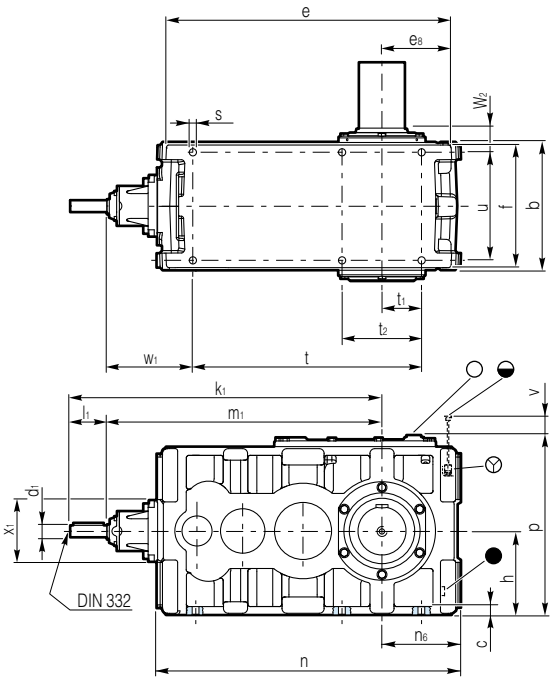

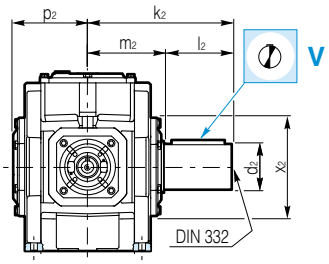

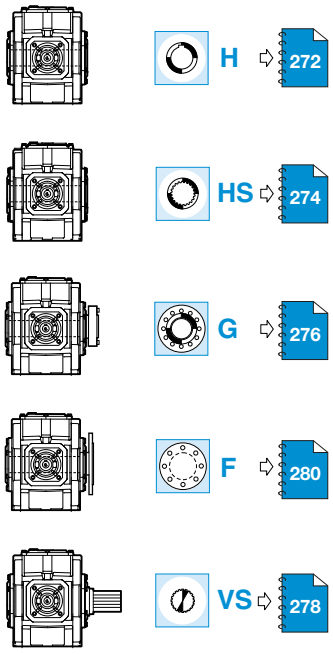

	Input shaft					Output shaft				
	Ø d_1	k_1	l_1	m_1	Ø x_1	Ø d_2	k_2	l_2	m_2	Ø x_2
E4B 18	25 k6	703	85	618	190	95 m6	350	170	180	–
E4B 19	25 k6	734	85	649	190	95 m6	350	170	180	–
E4B 20	25 k6	757	85	672	190	120 m6	370	190	180	–
E4B 22	40 k6	908	120	788	225	130 m6	405	190	215	–
E4B 25	40 k6	966	120	846	225	145 m6	450	230	220	296
E4B 26	40 k6	1021	120	901	255	145 m6	480	230	250	296
E4B 28	40 k6	1021	120	901	255	160 m6	480	230	250	328
E4B 31	40 k6	1089	120	969	255	175 m6	540	290	250	348

	Housing									
	b	c	e	e_8	f	h -0.2	n	n_6	p	p_2
E4B 18	294	18	622	155	284	190	654	171	419	–
E4B 19	294	18	687	186	284	202	716	202	443	–
E4B 20	294	18	732	211	284	225	764	227	489	–
E4B 22	358	24	782	193	346	235	826	215	513	–
E4B 25	358	24	896	249	346	265	940	271	573	204
E4B 26	420	28	948	230	408	280	1000	256	610	246
E4B 28	420	28	948	230	408	280	1000	256	610	246
E4B 31	420	28	1085	299	408	315	1137	325	680	239

	Fitting										
	Ø s	d_s x l_{max}	t	t_1	t_2	u	w_1	w_2	v	OIL [l]	Kg *
E4B 18	14.5	M12x55	486	87	175	248	219	56	35	16	270
E4B 19	14.5	M12x55	548	118	237	248	219	56	55	19	315
E4B 20	14.5	M12x90	596	143	285	248	219	56	60	22	370
E4B 22	18.5	M16x65	622	113	226	306	279	62	50	30	500
E4B 25	18.5	M16x90	736	169	340	306	279	67	90	38	650
E4B 26	24	M20x80	752	132	265	360	281	70	60	53	815
E4B 28	24	M20x80	752	132	265	360	281	70	60	52	825
E4B 31	24	M20x110	889	201	402	360	281	70	70	66	1140

***Provided weight values are without oil filling and may differ slightly according to specific product configuration.**
Dimensions l., m. and w. for grease lubricated labyrinth seals, on request.

E4B...-S5 MONOBLOCK HOUSING



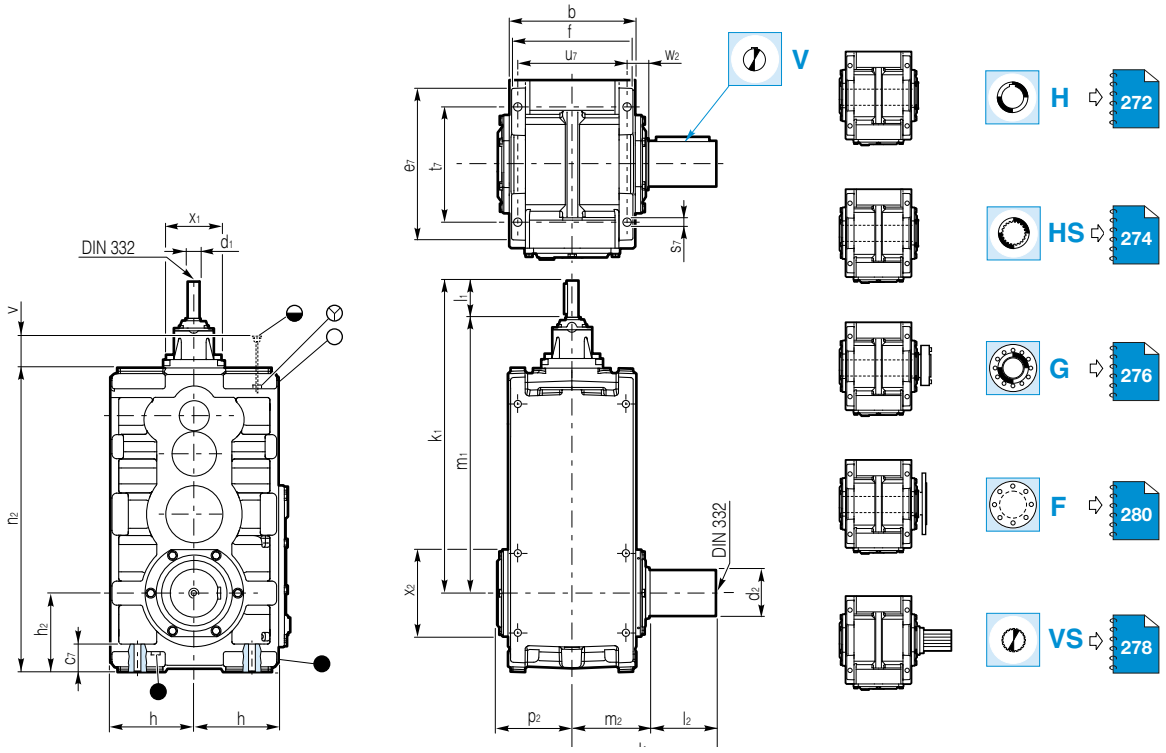

	Input shaft					Output shaft				
	Ø d_1	k_1	l_1	m_1	Ø x_1	Ø d_2	k_2	l_2	m_2	Ø x_2
E4B 18	25 k6	703	85	618	190	95 m6	350	170	180	–
E4B 19	25 k6	734	85	649	190	95 m6	350	170	180	–
E4B 20	25 k6	757	85	672	190	120 m6	370	190	180	–
E4B 22	40 k6	908	120	788	225	130 m6	405	190	215	–
E4B 25	40 k6	966	120	846	225	145 m6	450	230	220	296
E4B 26	40 k6	1021	120	901	255	145 m6	480	230	250	296
E4B 28	40 k6	1021	120	901	255	160 m6	480	230	250	328
E4B 31	40 k6	1089	120	969	255	175 m6	540	290	250	348

	Housing							
	b	c_7	e_7	f	h -0.2	h_2 -0.2	n_2	p_2
E4B 18	294	62	348	284	190	171	654	–
E4B 19	294	62	373	284	202	202	716	–
E4B 20	294	62	414	284	225	227	764	–
E4B 22	358	76	426	346	235	215	826	–
E4B 25	358	77	486	346	265	271	940	204
E4B 26	420	86	504	408	280	256	1000	246
E4B 28	420	86	504	408	280	256	1000	246
E4B 31	420	95	574	408	315	325	1137	239

	Fitting							
	Ø s_7	d_s x l_{max}	t_7	u_7	w_2	v	[l]	Kg *
E4B 18	16.5	M14x100	260	258	51	55	33	270
E4B 19	16.5	M14x100	284	258	51	55	36	315
E4B 20	16.5	M14x100	330	258	51	55	43	370
E4B 22	24	M20x130	326	312	59	65	59	500
E4B 25	24	M20x130	384	312	64	65	78	650
E4B 26	28	M24x150	386	366	67	70	103	815
E4B 28	28	M24x150	386	366	67	70	101	825
E4B 31	28	M24x160	456	366	67	70	140	1140

***Provided weight values are without oil filling and may differ slightly according to specific product configuration.**
Dimensions l., m. and w. for grease lubricated labyrinth seals, on request. Additional lubrication required, please check back.

E4B ...-T6 MONOBLOCK HOUSING

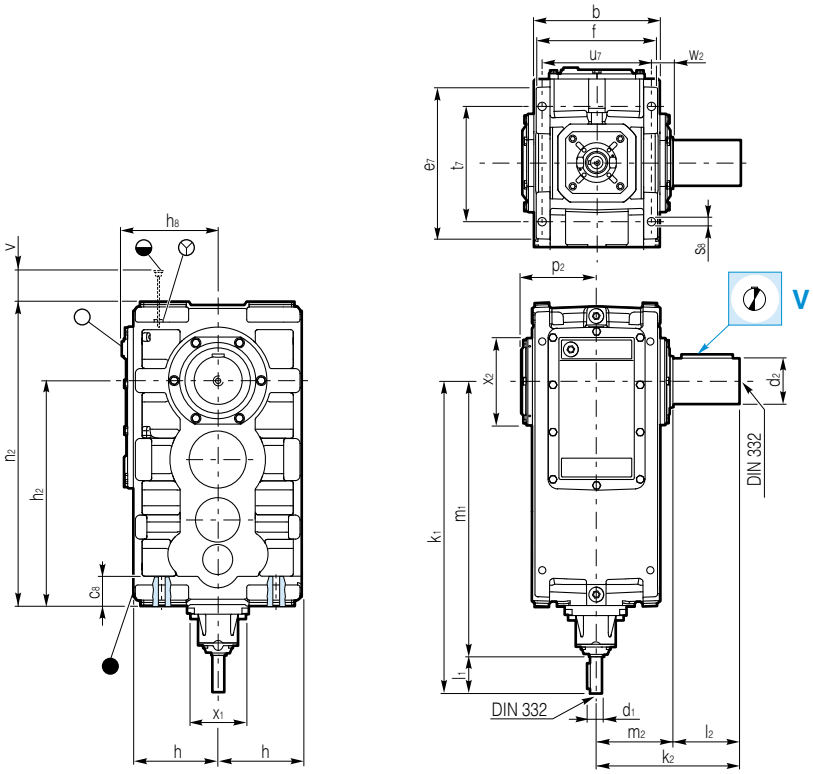

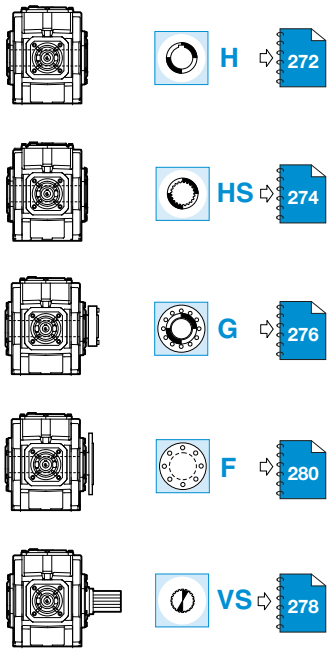

	Input shaft					Output shaft				
	Ø d_1	k_1	l_1	m_1	Ø x_1	Ø d_2	k_2	l_2	m_2	Ø x_2
E4B 18	25 k6	703	85	618	190	95 m6	350	170	180	–
E4B 19	25 k6	734	85	649	190	95 m6	350	170	180	–
E4B 20	25 k6	757	85	672	190	120 m6	370	190	180	–
E4B 22	40 k6	908	120	788	225	130 m6	405	190	215	–
E4B 25	40 k6	966	120	846	225	145 m6	450	230	220	296
E4B 26	40 k6	1021	120	901	255	145 m6	480	230	250	296
E4B 28	40 k6	1021	120	901	255	160 m6	480	230	250	328
E4B 31	40 k6	1089	120	969	255	175 m6	540	290	250	348

	Housing								
	b	c_8	e_7	f	h -0.2	h_2 -02	h_8	n_2	p_2
E4B 18	294	64	348	284	190	483	229	654	–
E4B 19	294	64	373	284	202	514	241	716	–
E4B 20	294	64	414	284	225	537	264	764	–
E4B 22	358	76	426	346	235	611	278	826	–
E4B 25	358	77	486	346	265	669	308	940	204
E4B 26	420	92	504	408	280	744	330	1000	246
E4B 28	420	92	504	408	280	744	330	1000	246
E4B 31	420	95	574	408	315	812	365	1137	239

	Fitting							
	Ø s_8	d_s x l_{max}	t_7	u_7	w_2	v	[l]	Kg *
E4B 18	16.5	M14x100	260	258	51	150	24	270
E4B 19	16.5	M14x100	284	258	51	200	27	315
E4B 20	16.5	M14x100	330	258	51	220	32	370
E4B 22	24	M20x130	326	312	59	190	46	500
E4B 25	24	M20x130	384	312	64	260	58	650
E4B 26	28	M24x150	386	366	67	230	80	815
E4B 28	28	M24x150	386	366	67	230	79	825
E4B 31	28	M24x160	456	366	67	290	104	1140

***Provided weight values are without oil filling and may differ slightly according to specific product configuration.**
Dimensions l., m. and w. for grease lubricated labyrinth seals, on request. Additional lubrication required, please check back.

DANA
BREVINI®
Motion Systems

E3C ... -R1 MONOBLOCK HOUSING

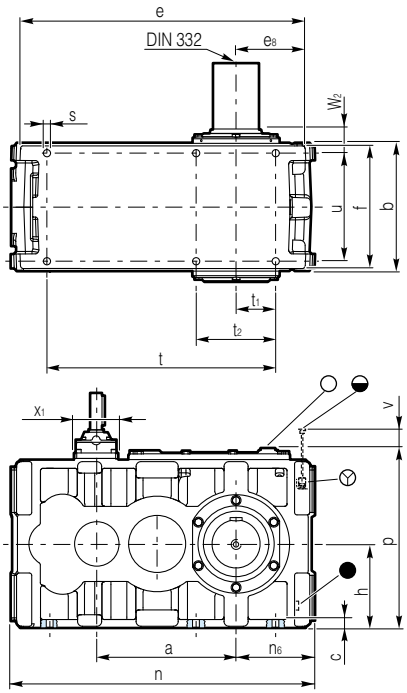

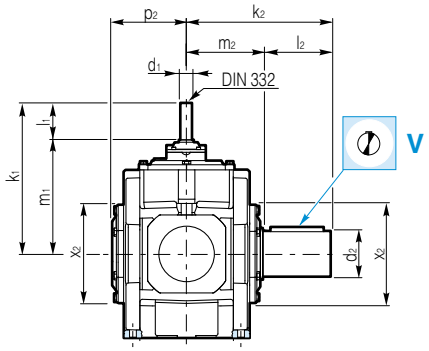

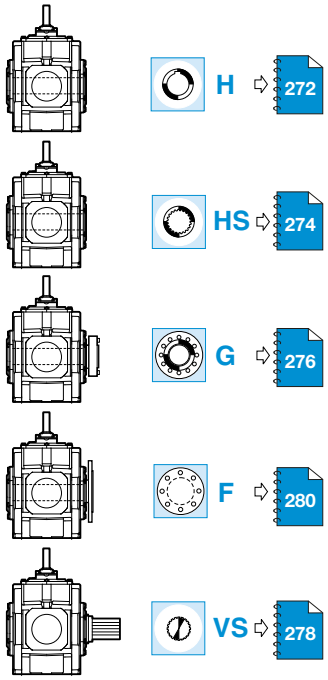

	Input shaft					Output shaft				
	Ø d_1	k_1	l_1	m_1	Ø x_1	Ø d_2	k_2	l_2	m_2	Ø x_2
E3C 18	40 k6	406	120	286	190	95 m6	350	170	180	–
E3C 19	40 k6	406	120	286	190	95 m6	350	170	180	–
E3C 20	40 k6	406	120	286	190	120 m6	370	190	180	–
E3C 22	50 k6	447	120	327	225	130 m6	405	190	215	–
E3C 25	50 k6	447	120	327	225	145 m6	450	230	220	296
E3C 26	60 m6	522	145	377	255	145 m6	480	230	250	296
E3C 28	60 m6	522	145	377	255	160 m6	480	230	250	328
E3C 31	60 m6	522	145	377	255	175 m6	540	290	250	348

	Housing										
	a	b	c	e	e_8	f	h -0.2	n	n_6	p	p_2
E3C 18	293	294	18	622	155	284	190	654	171	419	–
E3C 19	324	294	18	687	186	284	202	716	202	443	–
E3C 20	347	294	18	732	211	284	225	764	227	489	–
E3C 22	376	358	24	782	193	346	235	826	215	513	–
E3C 25	434	358	24	896	249	346	265	940	271	573	204
E3C 26	464	420	28	948	230	408	280	1000	256	610	246
E3C 28	464	420	28	948	230	408	280	1000	256	610	246
E3C 31	532	420	28	1085	299	408	315	1137	325	680	239

	Fitting									
	Ø s	d_s x l_{max}	t	t_1	t_2	u	w_2	v	[l]	Kg *
E3C 18	14.5	M12x55	486	87	175	248	56	45	15	270
E3C 19	14.5	M12x55	548	118	237	248	56	65	17	315
E3C 20	14.5	M12x90	596	143	285	248	56	70	20	370
E3C 22	18.5	M16x65	622	113	226	306	62	60	28	495
E3C 25	18.5	M16x90	736	169	340	306	67	100	36	645
E3C 26	24	M20x80	752	132	265	360	70	80	49	820
E3C 28	24	M20x80	752	132	265	360	70	80	48	830
E3C 31	24	M20x110	889	201	402	360	70	90	65	1145

***Provided weight values are without oil filling and may differ slightly according to specific product configuration.**
Dimensions l., m. and w. for grease lubricated labyrinth seals, on request. Additional lubrication required, please check back.

E3C ... -S5 MONOBLOCK HOUSING

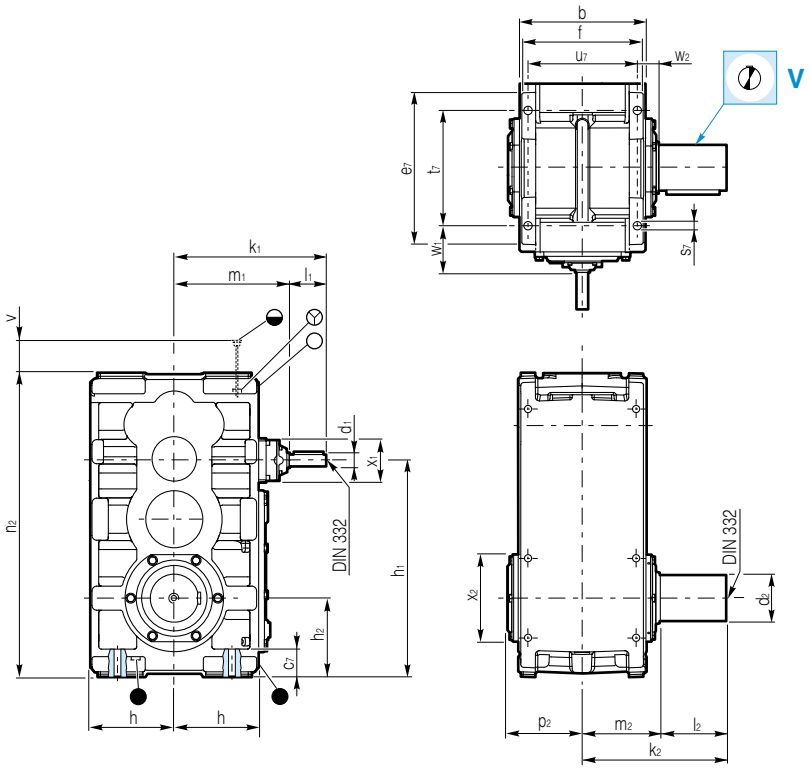

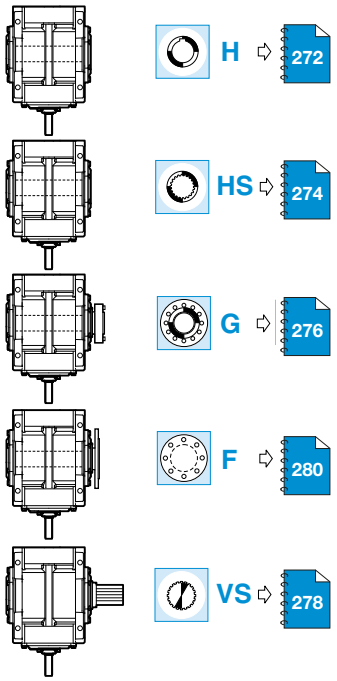

	Input shaft					Output shaft				
	Ø d_1	k_1	l_1	m_1	Ø x_1	Ø d_2	k_2	l_2	m_2	Ø x_2
E3C 18	40 k6	406	120	286	190	95 m6	350	170	180	–
E3C 19	40 k6	406	120	286	190	95 m6	350	170	180	–
E3C 20	40 k6	406	120	286	190	120 m6	370	190	180	–
E3C 22	50 k6	447	120	327	225	130 m6	405	190	215	–
E3C 25	50 k6	447	120	327	225	145 m6	450	230	220	296
E3C 26	60m6	522	145	377	255	145 m6	480	230	250	296
E3C 28	60m6	522	145	377	255	160 m6	480	230	250	328
E3C 31	60m6	522	145	377	255	175 m6	540	290	250	348

	Housing								
	b	c_7	e_7	f	h -0.2	h_1	h_2 -0.2	n_2	p_2
E3C 18	294	62	348	284	190	464	171	654	–
E3C 19	294	62	373	284	202	526	202	716	–
E3C 20	294	62	414	284	225	574	227	764	–
E3C 22	358	76	426	346	235	591	215	826	–
E3C 25	358	77	486	346	265	705	271	940	204
E3C 26	420	86	504	408	280	720	256	1000	246
E3C 28	420	86	504	408	280	720	256	1000	246
E3C 31	420	95	574	408	315	857	325	1137	239

	Fitting								
	Ø s_7	d_s x l_{max}	t_7	u_7	w_1	w_2	v	OIL [l]	Kg *
E3C 18	16.5	M14x100	260	258	156	51	160	25	270
E3C 19	16.5	M14x100	284	258	144	51	160	30	315
E3C 20	16.5	M14x100	330	258	121	51	160	35	370
E3C 22	24	M20x130	326	312	164	59	195	45	495
E3C 25	24	M20x130	384	312	135	64	195	62	645
E3C 26	28	M24x150	386	366	184	67	215	79	820
E3C 28	28	M24x150	386	366	184	67	215	77	830
E3C 31	28	M24x160	456	366	149	67	211	112	1145

***Provided weight values are without oil filling and may differ slightly according to specific product configuration.**
Dimensions l., m. and w. for grease lubricated labyrinth seals, on request.

E3C ... -T6 MONOBLOCK HOUSING

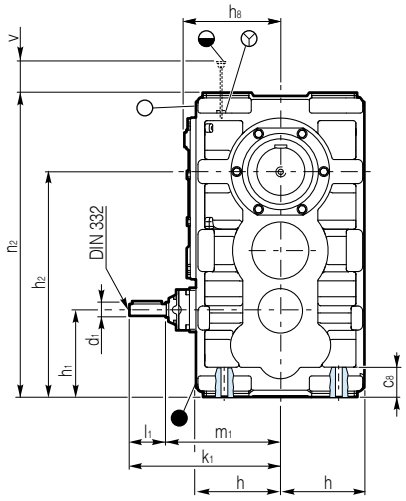

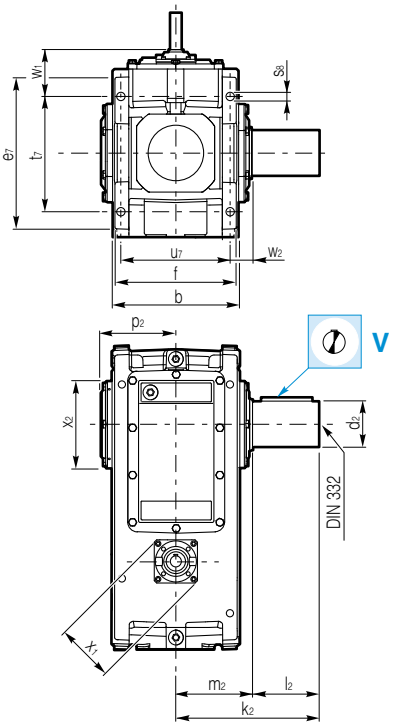

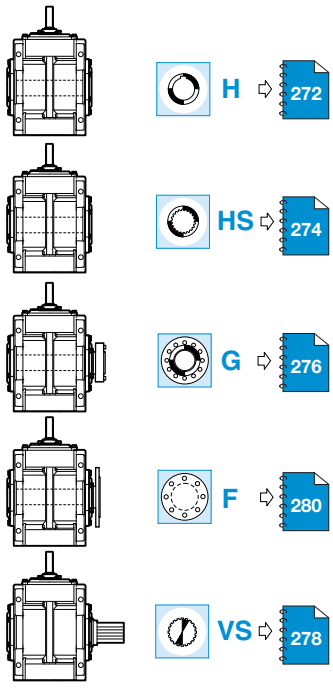

	Input shaft					Output shaft				
	Ø d_1	k_1	l_1	m_1	Ø x_1	Ø d_2	k_2	l_2	m_2	Ø x_2
E3C 18	40 k6	406	120	286	190	95 m6	350	170	180	–
E3C 19	40 k6	406	120	286	190	95 m6	350	170	180	–
E3C 20	40 k6	406	120	286	190	120 m6	370	190	180	–
E3C 22	50 k6	447	120	327	225	130 m6	405	190	215	–
E3C 25	50 k6	447	120	327	225	145 m6	450	230	220	296
E3C 26	60m6	522	145	377	255	145 m6	480	230	250	296
E3C 28	60m6	522	145	377	255	160 m6	480	230	250	328
E3C 31	60m6	522	145	377	255	175 m6	540	290	250	348

	Housing									
	b	c_8	e_7	f	h -0.2	h_1 -0.2	h_2	h_8	n_2	p_2
E3C 18	294	64	348	284	190	190	483	229	654	–
E3C 19	294	64	373	284	202	190	514	241	716	–
E3C 20	294	64	414	284	225	190	537	264	764	–
E3C 22	358	76	426	346	235	235	611	278	826	–
E3C 25	358	77	486	346	265	235	669	308	940	204
E3C 26	420	92	504	408	280	280	744	330	1000	246
E3C 28	420	92	504	408	280	280	744	330	1000	246
E3C 31	420	95	574	408	315	280	812	365	1137	239

	Fitting								
	Ø s_8	d_s x l_{max}	t_7	u_7	w_1	w_2	v	[l]	Kg *
E3C 18	16.5	M14x100	260	258	156	51	150	24	270
E3C 19	16.5	M14x100	284	258	144	51	200	26	315
E3C 20	16.5	M14x100	330	258	121	51	220	31	370
E3C 22	24	M20x130	326	312	164	59	190	46	495
E3C 25	24	M20x130	384	312	135	64	260	57	645
E3C 26	28	M24x150	386	366	184	67	230	79	820
E3C 28	28	M24x150	386	366	184	67	230	78	830
E3C 31	28	M24x160	456	366	149	67	290	101	1145

***Provided weight values are without oil filling and may differ slightly according to specific product configuration.**
Dimensions l., m. and w. for grease lubricated labyrinth seals, on request.

DANA
BREVINI®
Motion Systems

E4C ... -R1 MONOBLOCK HOUSING

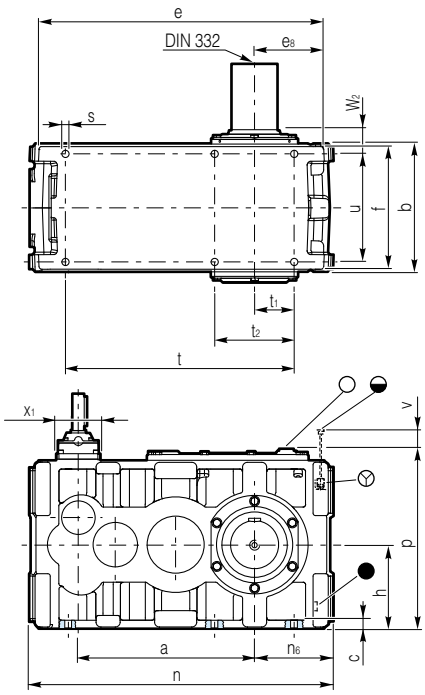

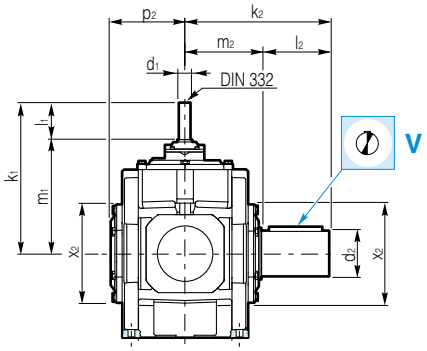

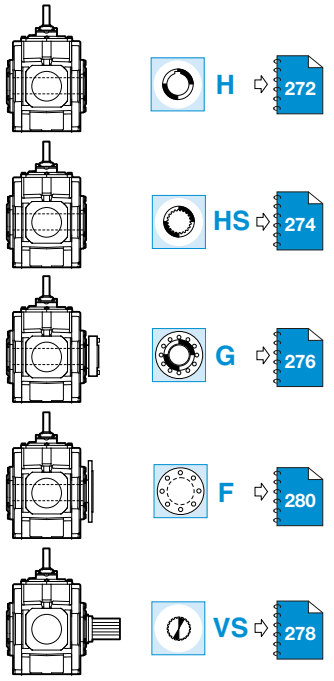

	Input shaft					Output shaft				
	Ø d_1	k_1	l_1	m_1	Ø x_1	Ø d_2	k_2	l_2	m_2	Ø x_2
E4C 18	25 k6	378	85	293	148	95 m6	350	170	180	–
E4C 19	25 k6	387	85	302	150	95 m6	350	170	180	–
E4C 20	25 k6	387	85	302	148	120 m6	370	190	180	–
E4C 22	40 k6	497	120	377	190	130 m6	405	190	215	–
E4C 25	40 k6	482	120	362	190	145 m6	450	230	220	296
E4C 26	40 k6	497	120	377	190	145 m6	480	230	250	296
E4C 28	40 k6	497	120	377	190	160 m6	480	230	250	328
E4C 31	40 k6	497	120	377	190	175 m6	540	290	250	348

	Housing										
	a	b	c	e	e_8	f	h -0.2	n	n_6	p	p_2
E4C 18	366	294	18	622	155	284	190	654	171	419	–
E4C 19	387	294	18	687	186	284	202	716	202	443	–
E4C 20	410	294	18	732	211	284	225	764	227	489	–
E4C 22	464	358	24	782	193	346	235	826	215	513	–
E4C 25	535	358	24	896	249	346	265	940	271	573	204
E4C 26	585	420	28	948	230	408	280	1000	256	610	246
E4C 28	585	420	28	948	230	408	280	1000	256	610	246
E4C 31	653	420	28	1085	299	408	315	1137	325	680	239

	Fitting									
	Ø s	d_s x l_{max}	t	t_1	t_2	u	w_2	v	[l]	*
E4C 18	14.5	M12x55	486	87	175	248	56	75	23	270
E4C 19	14.5	M12x55	548	118	237	248	56	85	24	315
E4C 20	14.5	M12x90	596	143	285	248	56	90	28	370
E4C 22	18.5	M16x65	622	113	226	306	62	85	42	500
E4C 25	18.5	M16x90	736	169	340	306	67	135	53	650
E4C 26	24	M20x80	752	132	265	360	70	125	74	815
E4C 28	24	M20x80	752	132	265	360	70	125	73	825
E4C 31	24	M20x110	889	201	402	360	70	145	96	1140

***Provided weight values are without oil filling and may differ slightly according to specific product configuration.**
Dimensions l., m. and w. for grease lubricated labyrinth seals, on request. Additional lubrication required, please check back.

E4C ... -S5 MONOBLOCK HOUSING

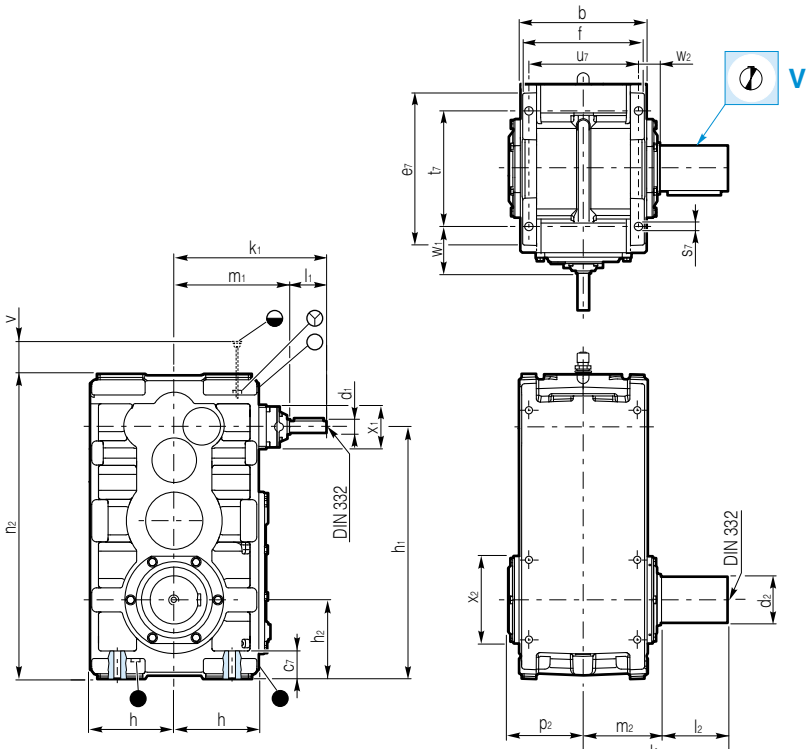

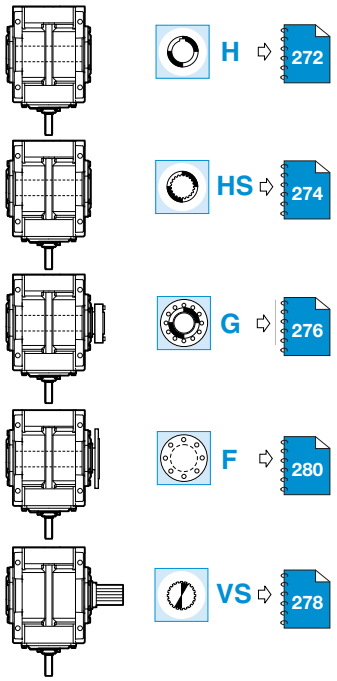

	Input shaft					Output shaft				
	Ø d_1	k_1	l_1	m_1	Ø x_1	Ø d_2	k_2	l_2	m_2	Ø x_2
E4C 18	25 k6	378	85	293	148	95 m6	350	170	180	–
E4C 19	25 k6	387	85	302	150	95 m6	350	170	180	–
E4C 20	25 k6	387	85	302	148	120 m6	370	190	180	–
E4C 22	40 k6	497	120	377	190	130 m6	405	190	215	–
E4C 25	40 k6	482	120	362	190	145 m6	450	230	220	296
E4C 26	40 k6	497	120	377	190	145 m6	480	230	250	296
E4C 28	40 k6	497	120	377	190	160 m6	480	230	250	328
E4C 31	40 k6	497	120	377	190	175 m6	540	290	250	348

	Housing								
	b	c_7	e_7	f	h -0.2	h_1	h_2 -0.2	n_2	p_2
E4C 18	294	62	348	284	190	537	171	654	–
E4C 19	294	62	373	284	202	589	202	716	–
E4C 20	294	62	414	284	225	637	227	764	–
E4C 22	358	76	426	346	235	679	215	826	–
E4C 25	358	77	486	346	265	806	271	940	204
E4C 26	420	86	504	408	280	841	256	1000	246
E4C 28	420	86	504	408	280	841	256	1000	246
E4C 31	420	95	574	408	315	978	325	1137	239

	Fitting								
	Ø s_7	d_s x l_{max}	t_7	u_7	w_1	w_2	v	OIL [l]	Kg *
E4C 18	16.5	M14x100	260	258	163	51	75	31	270
E4C 19	16.5	M14x100	284	258	160	51	85	34	315
E4C 20	16.5	M14x100	330	258	137	51	85	40	370
E4C 22	24	M20x130	326	312	214	59	90	55	500
E4C 25	24	M20x130	384	312	170	64	80	75	650
E4C 26	28	M24x150	386	366	184	67	75	96	815
E4C 28	28	M24x150	386	366	184	67	75	94	825
E4C 31	28	M24x160	456	366	149	67	75	135	1140

***Provided weight values are without oil filling and may differ slightly according to specific product configuration.**
Dimensions l., m. and w. for grease lubricated labyrinth seals, on request.

E4C ... -T6 MONOBLOCK HOUSING

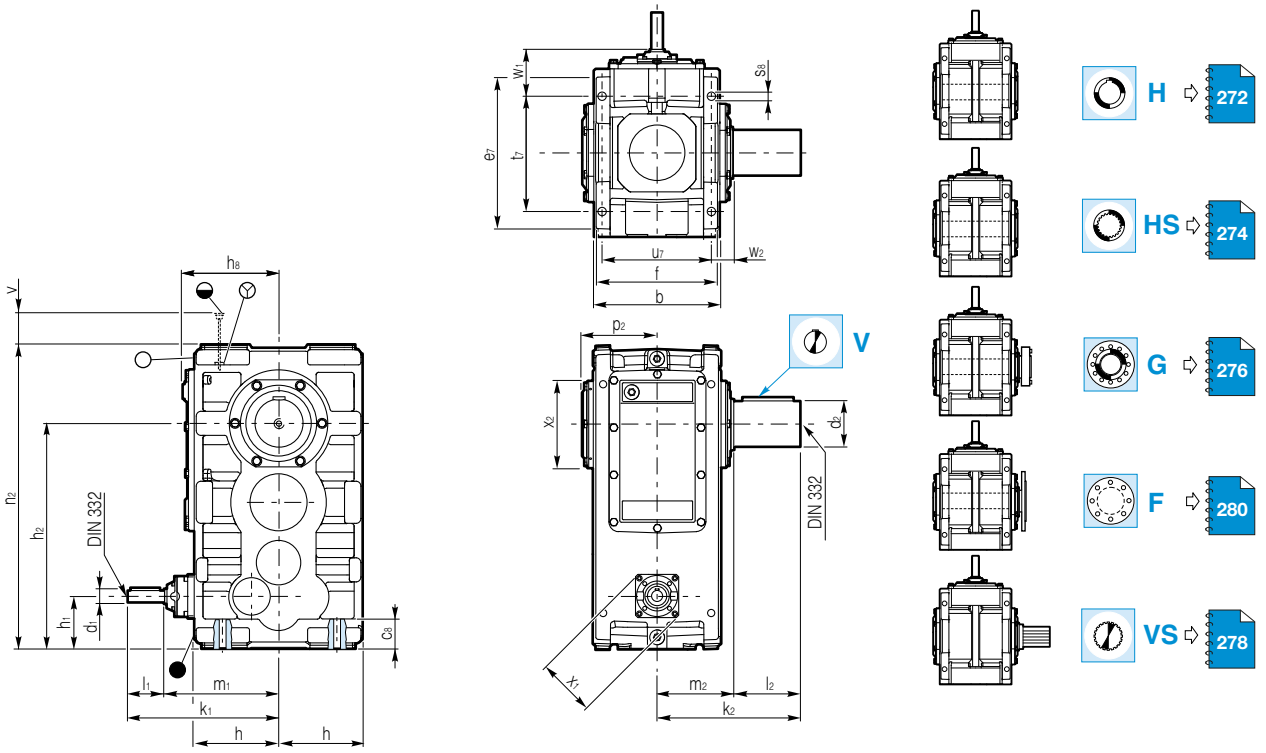

	Input shaft					Output shaft				
	Ø d_1	k_1	l_1	m_1	Ø x_1	Ø d_2	k_2	l_2	m_2	Ø x_2
E4C 18	25 k6	378	85	293	148	95 m6	350	170	180	–
E4C 19	25 k6	387	85	302	150	95 m6	350	170	180	–
E4C 20	25 k6	387	85	302	148	120 m6	370	190	180	–
E4C 22	40 k6	497	120	377	190	130 m6	405	190	215	–
E4C 25	40 k6	482	120	362	190	145 m6	450	230	220	296
E4C 26	40 k6	497	120	377	190	145 m6	480	230	250	296
E4C 28	40 k6	497	120	377	190	160 m6	480	230	250	328
E4C 31	40 k6	497	120	377	190	175 m6	540	290	250	348

	Housing									
	b	c_8	e_7	f_7	h -0.2	h_1 -0.2	h_2	h_8	n_2	p_2
E4C 18	294	64	348	284	190	117	483	229	654	–
E4C 19	294	64	373	284	202	127	514	241	716	–
E4C 20	294	64	414	284	225	127	537	264	764	–
E4C 22	358	76	426	346	235	147	611	278	826	–
E4C 25	358	77	486	346	265	134	669	308	940	204
E4C 26	420	92	504	408	280	159	744	330	1000	246
E4C 28	420	92	504	408	280	159	744	330	1000	246
E4C 31	420	95	574	408	315	159	812	365	1137	239

	Fitting								
	Ø s_8	d_s x l_{max}	t_7	u_7	w_1	w_2	v	[l]	Kg *
E4C 18	16.5	M14x100	260	258	163	51	150	24	270
E4C 19	16.5	M14x100	284	258	160	51	200	27	315
E4C 20	16.5	M14x100	330	258	137	51	220	32	370
E4C 22	24	M20x130	326	312	214	59	190	46	500
E4C 25	24	M20x130	384	312	170	64	260	58	650
E4C 26	28	M24x150	386	366	184	67	230	80	815
E4C 28	28	M24x150	386	366	184	67	230	79	825
E4C 31	28	M24x160	456	366	149	67	290	103	1140

***Provided weight values are without oil filling and may differ slightly according to specific product configuration.**
Dimensions l., m. and w. for grease lubricated labyrinth seals, on request.

DANA
BREVINI®
Motion Systems

SPLIT HOUSING - sizes from 35 to 56

Type		Mounting position	Page
Housing type 12 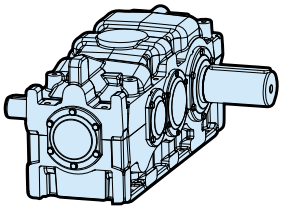 Housing type 11 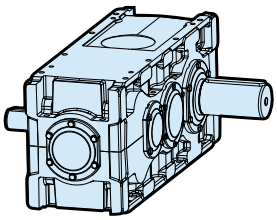 **Helical gear units**	**E2H**	R1	234
	E3H	R1	236
	E4H	R1	238
Housing type 12 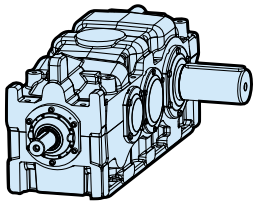 Housing type 11 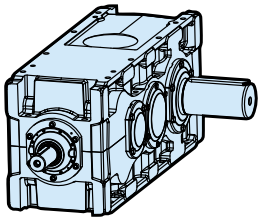 **Bevel-helical gear units**	**E3B**	R1	240
	E4B	R1	242

R1 : Horizontal, output shaft horizontal

E2H ... -R1 SPLIT HOUSING type 12

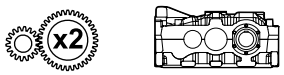

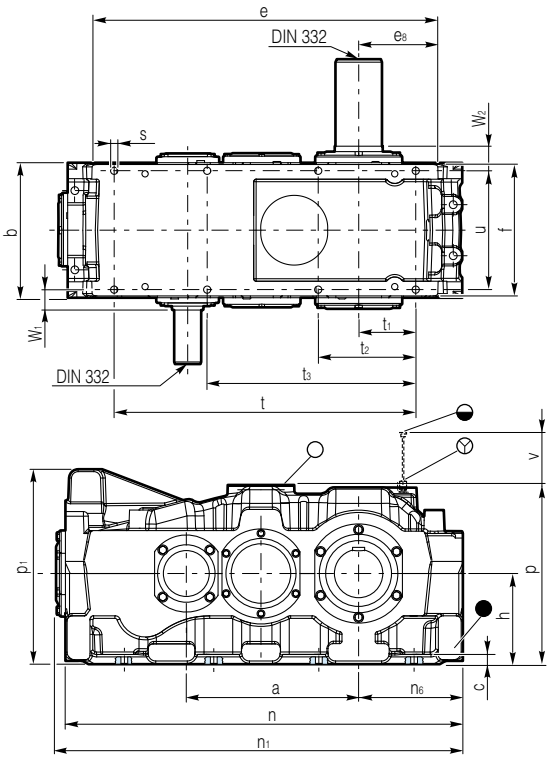

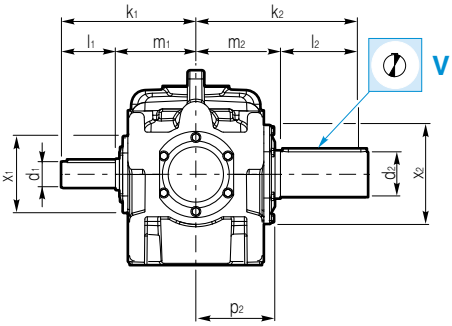

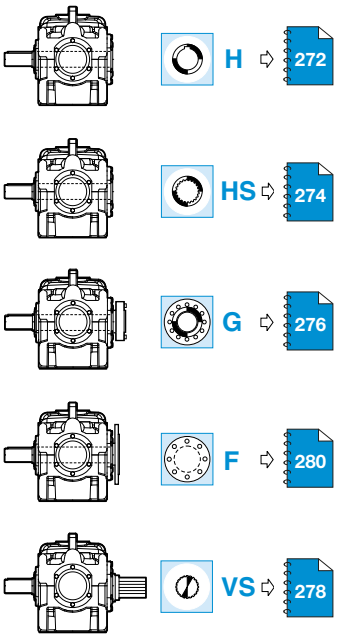

E2H ... -R1 SPLIT HOUSING type 11

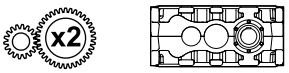

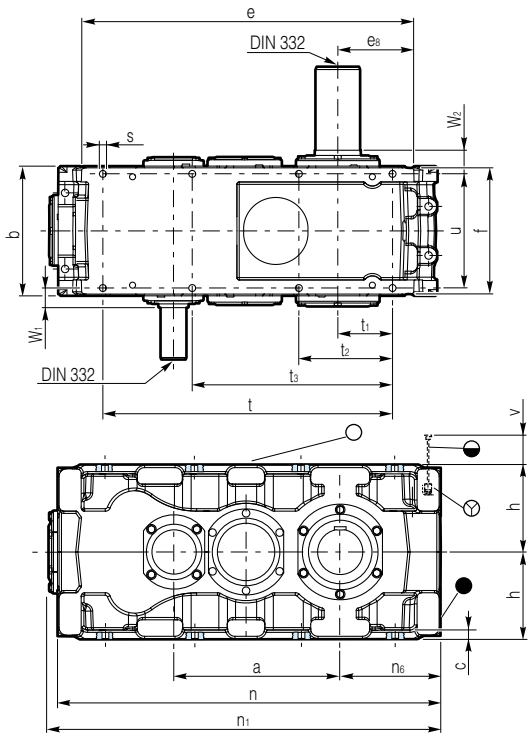

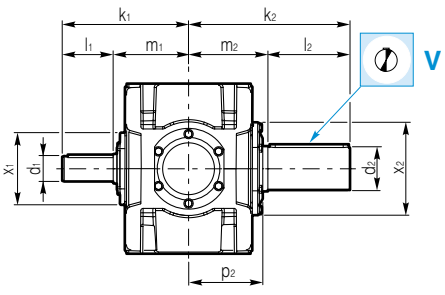

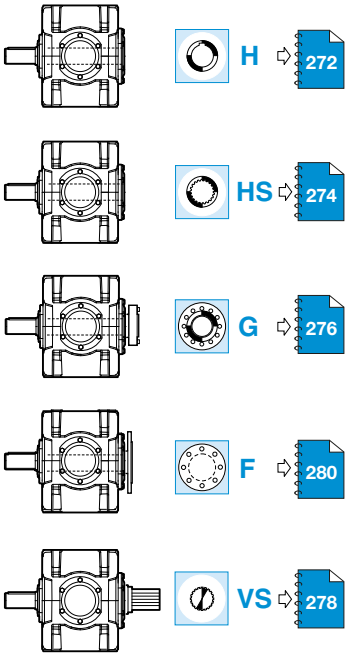

E2H ... -R1

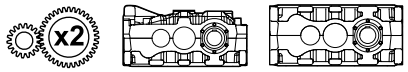

E2H	Input shaft					Output shaft					
	Ø d_1	k_1	l_1	m_1	Ø x_1	Ø d_2	k_2	l_2	m_2	Ø x_2	e_8
35	90 m6	446	180	266	255	155 m6	570	290	280	328	264
36	90 m6	446	180	266	255	175 m6	570	290	280	348	294
40	90 m6	446	180	266	255	175 m6	570	290	280	348	357
42	100 m6	537	215	322	328	195 m6	650	330	320	400	332
43	100 m6	537	215	322	328	195 m6	650	330	320	400	369
45	100 m6	537	215	322	328	210 m6	730	410	320	440	395
47	100 m6	537	215	322	328	230 m6	730	410	320	440	480
48	120 m6	600	215	385	348	235 m6	785	410	375	440	405
50	120 m6	600	215	385	348	250 m6	795	410	385	480	405
53	120 m6	600	215	385	348	250 m6	795	410	385	480	480
56	120 m6	600	215	385	348	270 m6	845	460	385	540	580

E2H	Housing												
	a	b	c	e	t_1	f	h -0.2	n	n_1	n_6	p	p_1	p_2
35	570	450	32	1152	190	438	300	1315	1346	345	593	645	262
36	600	450	32	1212	220	438	330	1375	1406	375	654	675	262
40	647	450	32	1338	265	438	375	1470	1501	423	750	720	262
42	693	530	40	1416	225	514	355	1615	1652	422	704	728	303
43	730	530	40	1490	262	514	392	1689	1726	459	778	765	303
45	759	530	40	1535	285	514	425	1749	1786	490	847	798	303
47	845	530	40	1718	370	514	500	1920	1957	575	1000	873	303
48	857	640	50	1743	280	620	425	1962	2000	505	865	833	358
50	857	640	50	1743	280	620	425	1962	2000	505	865	833	358
53	928	640	50	1890	355	620	500	2108	2146	580	1000	908	358
56	1021	640	50	2082	450	620	600	2301	2339	680	1200	1008	365

E2H	Fitting							
	Ø s	d_s x l_{max}	t	t_2	t_3	u	w_1	w_2
35	24	M20x85	1005	325	695	396	68	82
36	24	M20x85	1065	385	755	396	68	82
40	24	M20x120	1157	477	847	396	68	82
42	28	M24x100	1230	390	820	460	92	90
43	28	M24x100	1304	464	894	460	92	90
45	28	M24x120	1356	516	946	460	92	90
47	28	M24x250	1527	687	1117	460	92	90
48	35	M30x120	1524	504	1014	560	105	105
50	35	M30x120	1524	504	1014	560	105	105
53	35	M30x180	1670	650	1160	560	105	105
56	35	M30x250	1858	838	1348	560	105	105

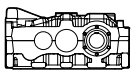

E2H	v	[l]	Kg *
35	295	57	1365
36	330	66	1530
40	320	79	1680
42	360	95	2010
43	405	110	2122
45	380	135	2520
47	435	190	3030
48	355	201	3740
50	355	201	3740
53	450	268	4180
56	510	378	5250

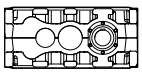

E2H	v	[l]	Kg *
35	205	57	1465
36	235	66	1640
40	230	79	1815
42	260	95	2175
43	300	110	2300
45	260	135	2720
47	265	190	3330
48	265	201	4000
50	265	201	4000
53	275	268	4505
56	275	378	5700

***Provided weight values are without oil filling and may differ slightly according to specific product configuration.**

Dimensions l., m. and w. for grease lubricated labyrinth seals, on request.

E3H ... -R1 SPLIT HOUSING type 12



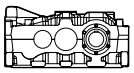

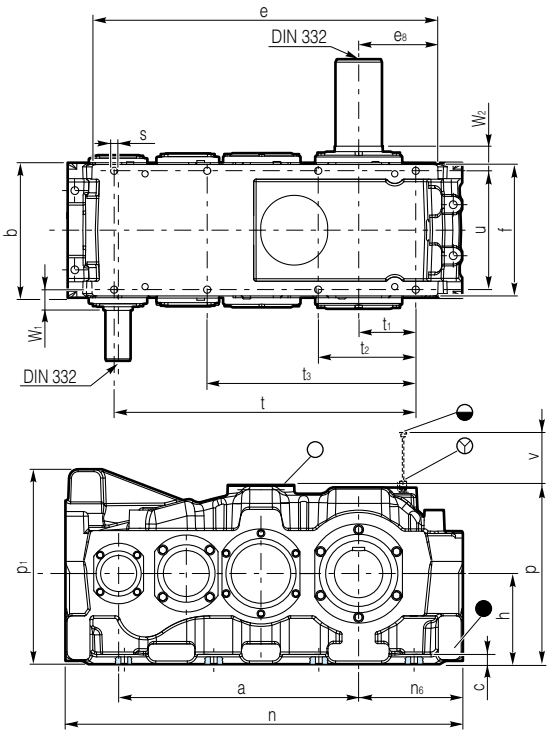

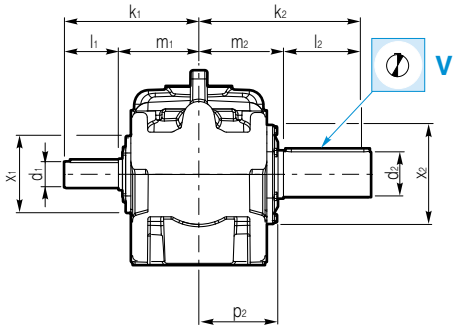

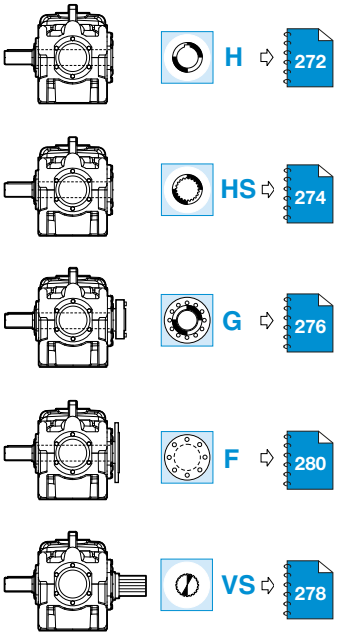

E3H ... -R1 SPLIT HOUSING type 11



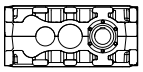

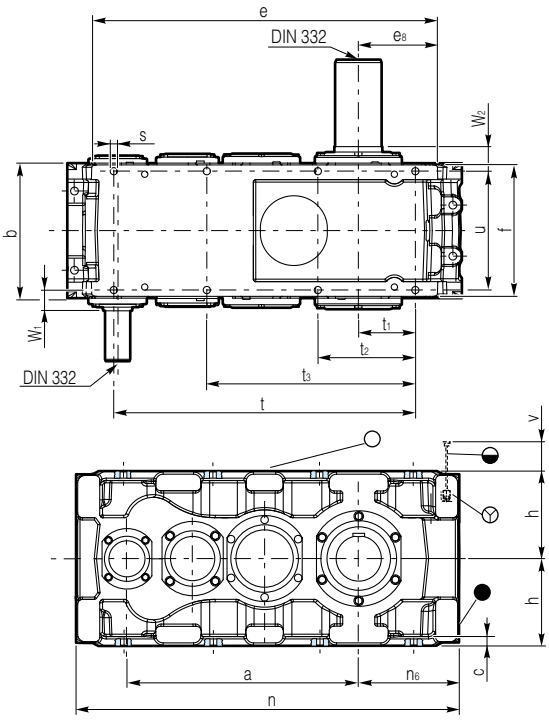

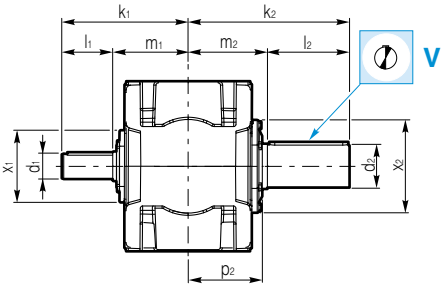

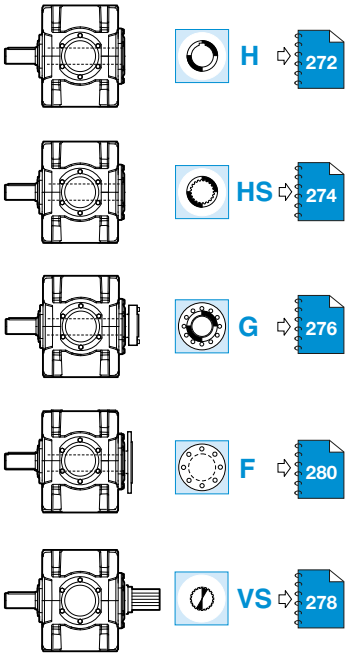

E3H ... -R1

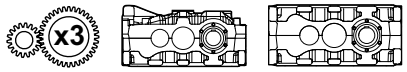

E3H	Input shaft										Output shaft					
	i_N	Ø d_1	k_1	l_1	i_N	Ø d_1	k_1	l_1	m_1	Ø x_1	Ø d_2	k_2	l_2	m_2	Ø x_2	e_8
35	16...45	70 m6	435	145	50...100	50 k6	415	125	290	205	155 m6	570	290	280	328	264
36	18...50	70 m6	435	145	56...112	50 k6	415	125	290	205	175 m6	570	290	280	348	293
40	20...56	70 m6	435	145	63...125	50 k6	415	125	290	205	175 m6	570	290	280	348	357
42	16...45	80 m6	508	170	50...100	65 m6	483	145	338	245	195 m6	650	330	320	400	332
43	18...50	80 m6	508	170	56...112	65 m6	483	145	338	245	195 m6	650	330	320	400	369
45	20...56	80 m6	508	170	63...125	65 m6	483	145	338	245	210 m6	730	410	320	440	395
47	25...71	80 m6	508	170	80...160	65 m6	483	145	338	245	230 m6	730	410	320	440	480
48	16...100	100 m6	595	215	-	-	-	-	380	290	235 m6	785	410	375	440	405
50	16...100	100 m6	595	215	-	-	-	-	380	290	250 m6	795	410	385	480	405
53	20...125	100 m6	595	215	-	-	-	-	380	290	250 m6	795	410	385	480	480
56	22.4...140	100 m6	595	215	-	-	-	-	380	290	270 m6	845	460	385	540	580

E3H	Housing											
	a	b	c	e	t_1	f	h -0.2	n	n_6	p	p_1	p_2
35	734	450	32	1152	190	438	300	1315	345	593	645	262
36	764	450	32	1212	220	438	330	1375	375	654	675	262
40	811	450	32	1338	265	438	375	1470	423	750	720	262
42	894	530	40	1416	225	514	355	1615	422	704	728	303
43	931	530	40	1490	262	514	392	1689	459	778	765	303
45	960	530	40	1535	285	514	425	1749	490	847	798	303
47	1046	530	40	1718	370	514	500	1920	575	1000	873	303
48	1104	640	50	1743	280	620	425	1962	505	865	833	358
50	1104	640	50	1743	280	620	425	1962	505	865	833	358
53	1175	640	50	1890	355	620	500	2108	580	1000	908	358
56	1268	640	50	2082	450	620	600	2301	680	1200	1008	365

E3H	Fitting							
	Ø s	d_s x l_{max}	t	t_2	t_3	u	w_1	w_2
35	24	M20x85	1005	325	695	396	92	82
36	24	M20x85	1065	385	755	396	92	82
40	24	M20x120	1157	477	847	396	92	82
42	28	M24x100	1230	390	820	460	108	90
43	28	M24x100	1304	464	894	460	108	90
45	28	M24x120	1356	516	946	460	108	90
47	28	M24x250	1527	687	1117	460	108	90
48	35	M30x120	1524	504	1014	560	100	105
50	35	M30x120	1524	504	1014	560	100	105
53	35	M30x180	1670	650	1160	560	100	105
56	35	M30x250	1858	838	1348	560	100	105

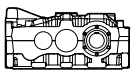

E3H	v	[l]	Kg *
35	295	62	1415
36	330	71	1580
40	320	85	1730
42	360	105	2085
43	405	120	2200
45	380	145	2590
47	435	205	3090
48	355	211	3940
50	355	211	3940
53	450	278	4540
56	510	388	5455

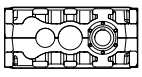

E3H	v	[l]	Kg *
35	205	62	1515
36	235	71	1690
40	230	85	1865
42	260	105	2250
43	300	120	2380
45	260	145	2790
47	265	205	3390
48	265	211	4200
50	265	211	4200
53	275	278	4865
56	275	388	5905

***Provided weight values are without oil filling and may differ slightly according to specific product configuration.**

Dimensions l., m. and w. for grease lubricated labyrinth seals, on request.

E4H ... -R1 SPLIT HOUSING type 12



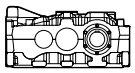

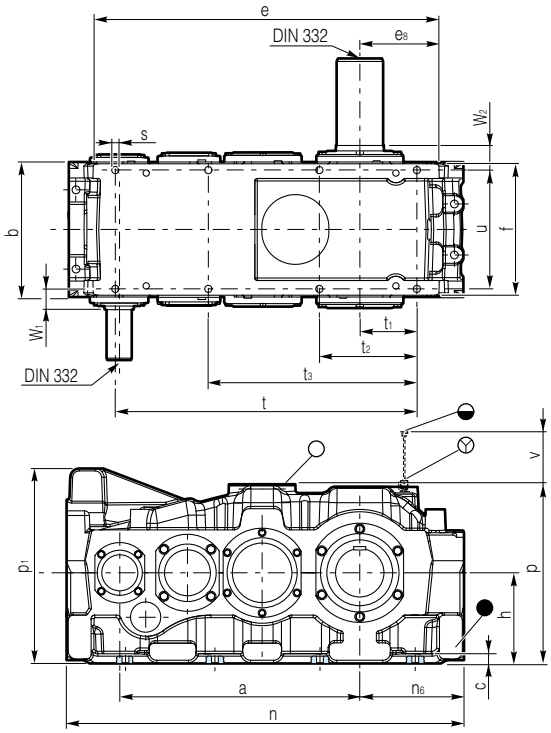

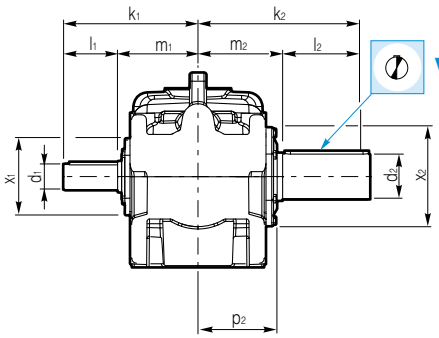

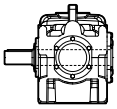

H ⇨ 272

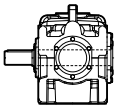

HS ⇨ 274

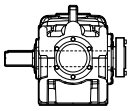

G ⇨ 276

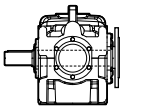

F ⇨ 280

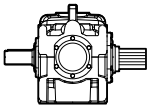

VS ⇨ 278

E4H ... -R1 SPLIT HOUSING type 11



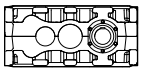

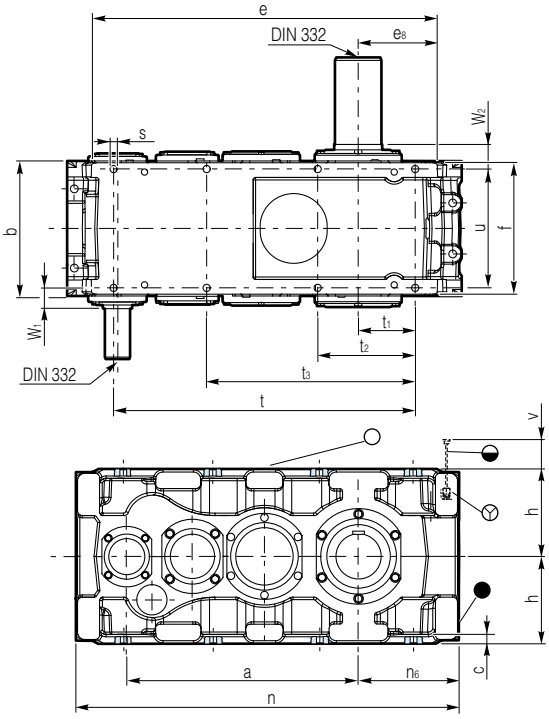

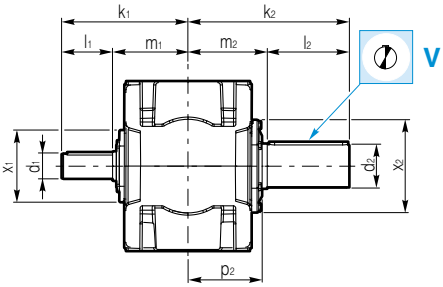

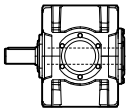

H ⇨ 272

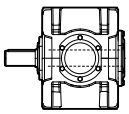

HS ⇨ 274

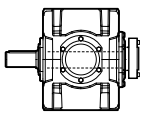

G ⇨ 276

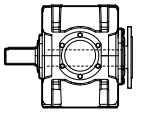

F ⇨ 280

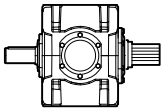

VS ⇨ 278

E4H ... -R1

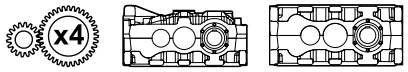

E4H	Input shaft										Output shaft					
	i_N	Ø d_1	k_1	l_1	i_N	Ø d_1	k_1	l_1	m_1	Ø x_1	Ø d_2	k_2	l_2	m_2	Ø x_2	e_8
35	71...200	50 k6	380	120	224...450	40 k6	380	120	260	-	155 m6	570	290	280	328	264
36	80...224	50 k6	380	120	250...500	40 k6	380	120	260	-	175 m6	570	290	280	348	293
40	100...280	50 k6	380	120	315...630	40 k6	380	120	260	-	175 m6	570	290	280	348	357
42	71...450	45 k6	412	107	-	-	-	-	305	-	195 m6	650	330	320	400	332
43	80...500	45 k6	412	107	-	-	-	-	305	-	195 m6	650	330	320	400	369
45	90...560	45 k6	412	107	-	-	-	-	305	-	210 m6	730	410	320	440	395
47	112...710	45 k6	412	107	-	-	-	-	305	-	230 m6	730	410	320	440	480
48	71...450	70 m6	510	145	-	-	-	-	365	-	235 m6	785	410	375	440	405
50	71...450	70 m6	510	145	-	-	-	-	365	-	250 m6	795	410	385	480	405
53	90...560	70 m6	510	145	-	-	-	-	365	-	250 m6	795	410	385	480	480
56	100...630	70 m6	510	145	-	-	-	-	365	-	270 m6	845	460	385	540	580

E4H	Housing											
	a	b	c	e	t_1	f	h -0.2	n	n_6	p	p_1	p_2
35	734	450	32	1152	190	438	300	1315	345	593	645	262
36	764	450	32	1212	220	438	330	1375	375	654	675	262
40	811	450	32	1338	265	438	375	1470	423	750	720	262
42	894	530	40	1416	225	514	355	1615	422	704	728	303
43	931	530	40	1490	262	514	392	1689	459	778	765	303
45	960	530	40	1535	285	514	425	1749	490	847	798	303
47	1046	530	40	1718	370	514	500	1920	575	1000	873	303
48	1104	640	50	1743	280	620	425	1962	505	865	833	358
50	1104	640	50	1743	280	620	425	1962	505	865	833	358
53	1175	640	50	1890	355	620	500	2108	580	1000	908	358
56	1268	640	50	2082	450	620	600	2301	680	1200	1008	365

E4H	Fitting							
	Ø s	d_s x l_{max}	t	t_2	t_3	u	w_1	w_2
35	24	M20x85	1005	325	695	396	62	82
36	24	M20x85	1065	385	755	396	62	82
40	24	M20x120	1157	477	847	396	62	82
42	28	M24x100	1230	390	820	460	75	90
43	28	M24x100	1304	464	894	460	75	90
45	28	M24x120	1356	516	946	460	75	90
47	28	M24x250	1527	687	1117	460	75	90
48	35	M30x120	1524	504	1014	560	85	105
50	35	M30x120	1524	504	1014	560	85	105
53	35	M30x180	1670	650	1160	560	85	105
56	35	M30x250	1858	838	1348	560	85	105

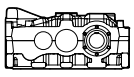

E4H	v	OIL [l]	Kg *
35	295	67	1440
36	330	77	1600
40	320	90	1750
42	360	115	2085
43	405	135	2200
45	380	155	2620
47	435	215	3090
48	355	211	3940
50	355	211	3940
53	450	278	4540
56	510	398	5455

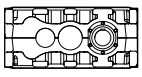

E4H	v	OIL [l]	Kg *
35	205	67	1540
36	235	77	1710
40	230	90	1885
42	260	115	2250
43	300	135	2380
45	260	155	2820
47	265	215	3390
48	265	211	4200
50	265	211	4200
53	275	278	4865
56	275	398	5905

***Provided weight values are without oil filling and may differ slightly according to specific product configuration.**

Dimensions l., m. and w. for grease lubricated labyrinth seals, on request.

E3B ... -R1 SPLIT HOUSING type 12

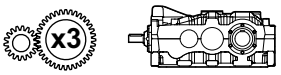

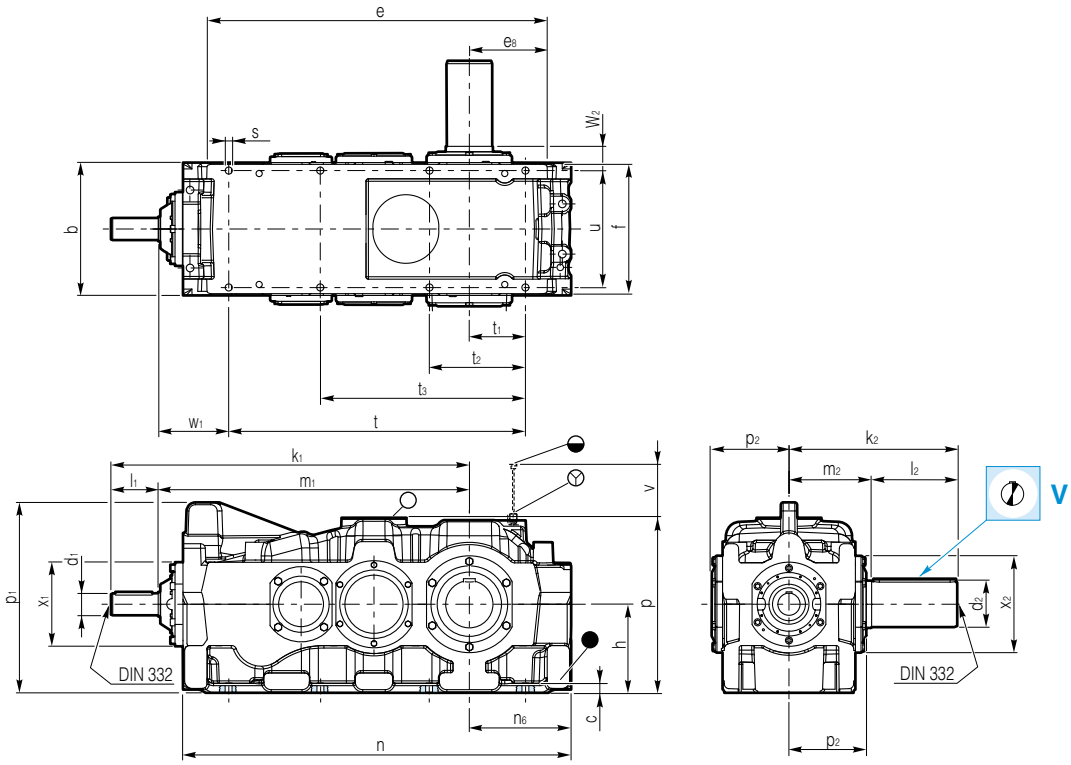

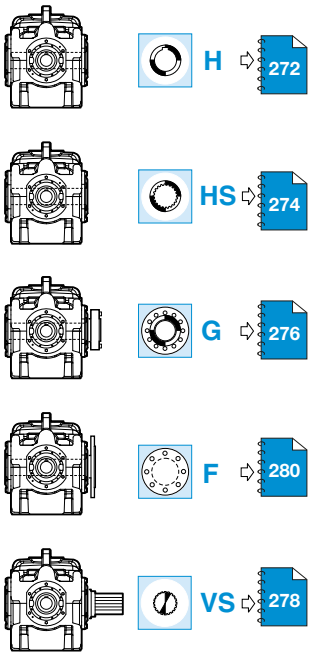

E3B ... -R1 SPLIT HOUSING type 11

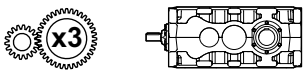

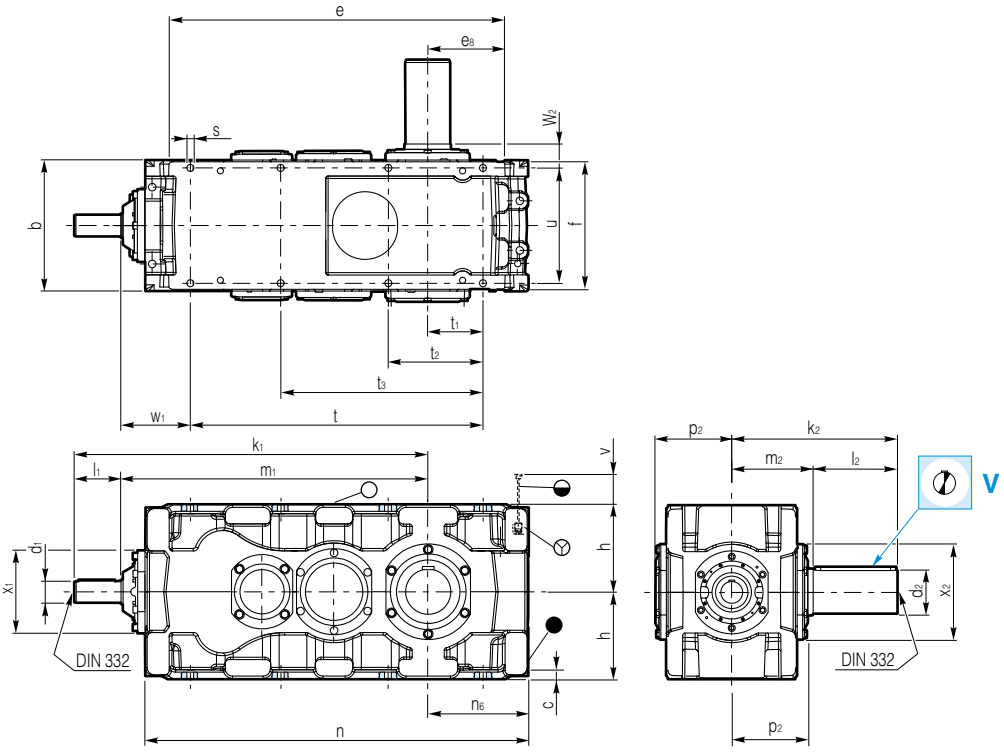

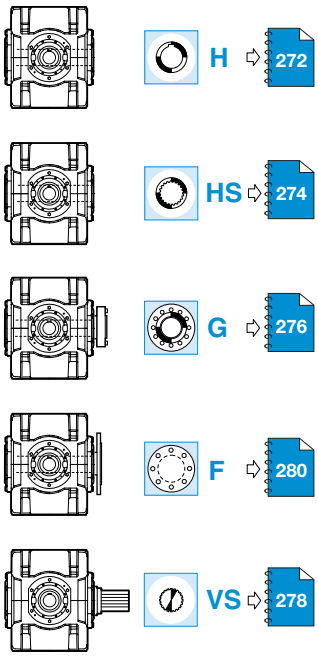

E3B ... -R1

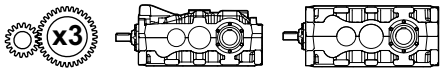

E3B	Input shaft					Output shaft					
	Ø d_1	k_1	l_1	m_1	Ø x_1	Ø d_2	k_2	l_2	m_2	Ø x_2	e_8
35	75 m6	1214	160	1054	285	155 m6	570	290	280	328	264
36	75 m6	1244	160	1084	285	175 m6	570	290	280	348	293
40	75 m6	1291	160	1131	285	175 m6	570	290	280	348	357
42	85 m6	1455	180	1275	350	195 m6	650	330	320	400	332
43	85 m6	1492	180	1312	350	195 m6	650	330	320	400	369
45	85 m6	1521	180	1341	350	210 m6	730	410	320	440	395
47	85 m6	1607	180	1427	350	230 m6	730	410	320	440	480
48	100 m6	1792	215	1577	440	235 m6	785	410	375	440	405
50	100 m6	1792	215	1577	440	250 m6	795	410	385	480	405
53	100 m6	1863	215	1648	440	250 m6	795	410	385	480	480
56	100 m6	1956	215	1741	440	270 m6	845	460	385	540	580

E3B	Housing										
	b	c	e	t_1	f	h -0.2	n	n_6	p	p_1	p_2
35	450	32	1152	190	438	300	1315	345	593	645	262
36	450	32	1212	220	438	330	1375	375	654	675	262
40	450	32	1338	265	438	375	1470	423	750	720	262
42	530	40	1416	225	514	355	1615	422	704	728	303
43	530	40	1490	262	514	392	1689	459	778	765	303
45	530	40	1535	285	514	425	1749	490	847	798	303
47	530	40	1718	370	514	500	1920	575	1000	873	303
48	640	50	1743	280	620	425	1962	505	865	833	358
50	640	50	1743	280	620	425	1962	505	865	833	358
53	640	50	1890	355	620	500	2108	580	1000	908	358
56	640	50	2082	450	620	600	2301	680	1200	1008	365

E3B	Fitting							
	Ø s	d_s x l_{max}	t	t_2	t_3	u	w_1	w_2
35	24	M20x85	1005	325	695	396	239	82
36	24	M20x85	1065	385	755	396	239	82
40	24	M20x120	1157	477	847	396	239	82
42	28	M24x100	1230	390	820	460	270	90
43	28	M24x100	1304	464	894	460	270	90
45	28	M24x120	1356	516	946	460	270	90
47	28	M24x250	1527	687	1117	460	270	90
48	35	M30x120	1524	504	1014	560	333	105
50	35	M30x120	1524	504	1014	560	333	105
53	35	M30x180	1670	650	1160	560	333	105
56	35	M30x250	1858	838	1348	560	333	105

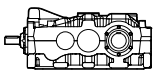

E3B	v	[l]	Kg *
35	295	60	1330
36	330	69	1470
40	320	95	1670
42	360	101	2270
43	405	117	2470
45	380	135	2700
47	435	190	3270
48	355	191	3940
50	355	191	4090
53	450	268	4630
56	510	358	5540

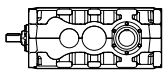

E3B	v	[l]	Kg *
35	205	60	1430
36	235	69	1580
40	230	95	1810
42	260	101	2400
43	300	117	2660
45	260	135	2980
47	265	190	3710
48	265	191	4150
50	265	191	4350
53	275	268	4960
56	275	358	5990

***Provided weight values are without oil filling and may differ slightly according to specific product configuration.**

Dimensions l., m. and w. for grease lubricated labyrinth seals, on request.

E4B ... -R1 SPLIT HOUSING type 12

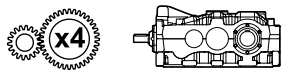

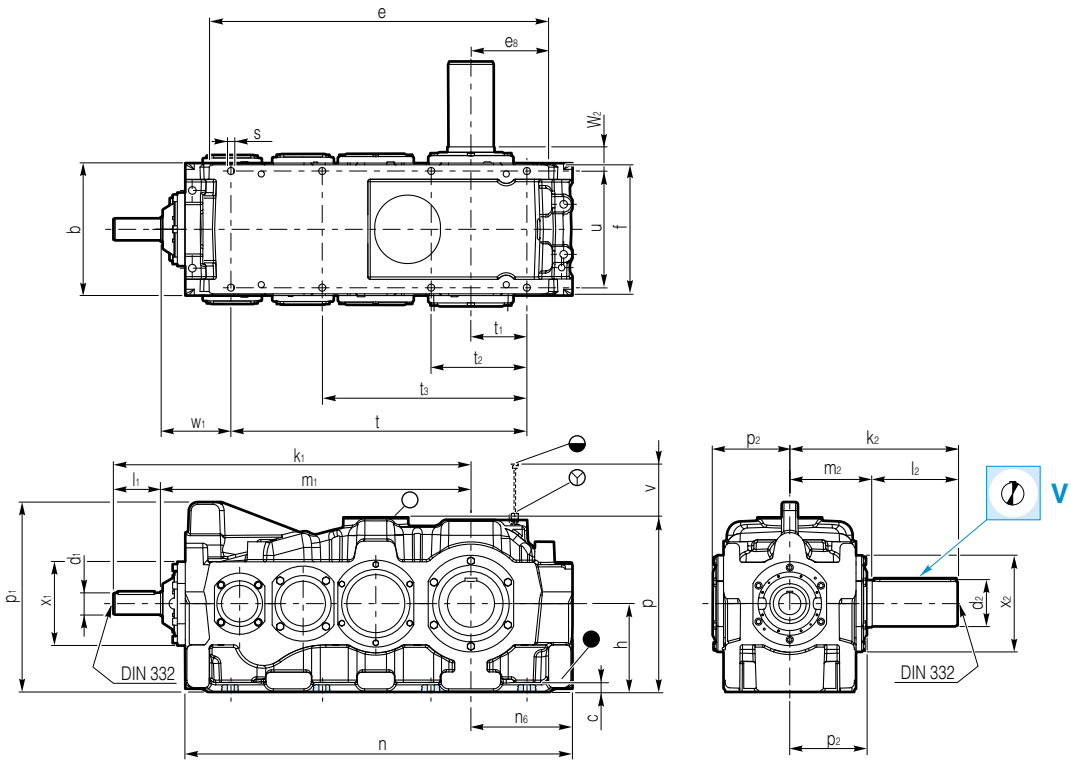

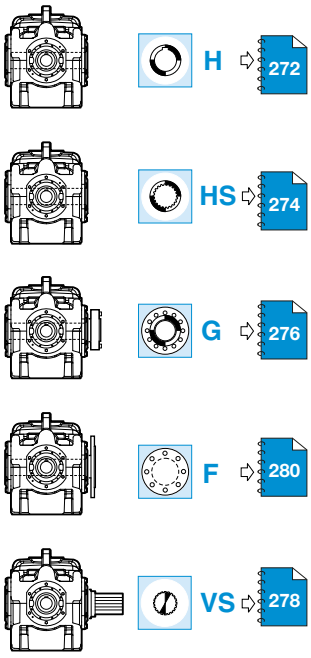

E4B ... -R1 SPLIT HOUSING type 11

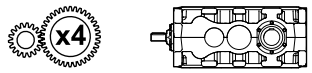

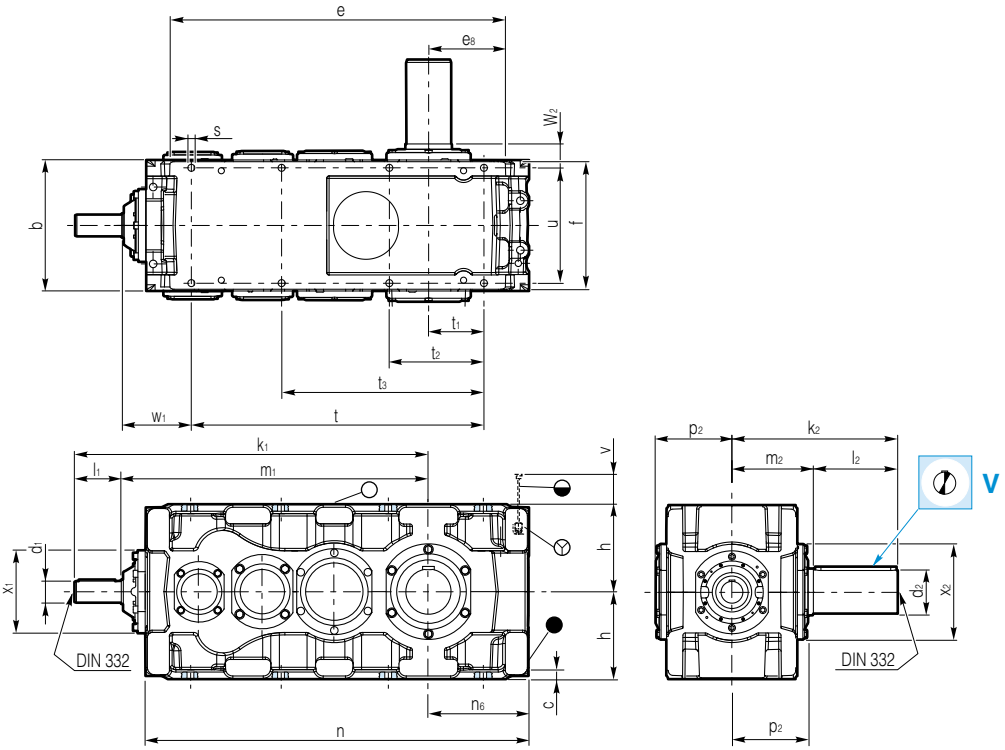

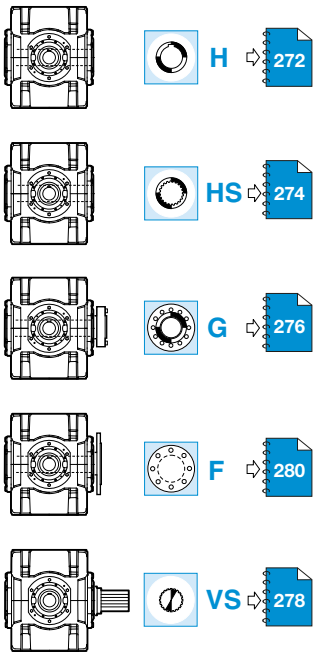

E4B ... -R1

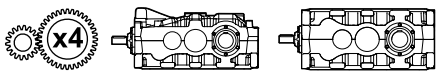

E4B	Input shaft					Output shaft					
	Ø d_1	k_1	l_1	m_1	Ø x_1	Ø d_2	k_2	l_2	m_2	Ø x_2	e_8
35	50 k6	1188	120	1068	285	155 m6	570	290	280	328	264
36	50 k6	1218	120	1098	285	175 m6	570	290	280	348	293
40	50 k6	1265	120	1145	285	175 m6	570	290	280	348	357
42	60 m6	1416	145	1271	350	195 m6	650	330	320	400	332
43	60 m6	1453	145	1308	350	195 m6	650	330	320	400	369
45	60 m6	1482	145	1337	350	210 m6	730	410	320	440	395
47	60 m6	1568	145	1423	350	230 m6	730	410	320	440	480
48	75 m6	1748	160	1588	440	235 m6	785	410	375	440	405
50	75 m6	1748	160	1588	440	250 m6	795	410	385	480	405
53	75 m6	1819	160	1659	440	250 m6	795	410	385	480	480
56	75 m6	1912	160	1752	440	270 m6	845	460	385	540	580

E4B	Housing										
	b	c	e	t_1	f	h -0.2	n	n_6	p	p_1	p_2
35	450	32	1152	190	438	300	1315	345	593	645	262
36	450	32	1212	220	438	330	1375	375	654	675	262
40	450	32	1338	265	438	375	1470	423	750	720	262
42	530	40	1416	225	514	355	1615	422	704	728	303
43	530	40	1490	262	514	392	1689	459	778	765	303
45	530	40	1535	285	514	425	1749	490	847	798	303
47	530	40	1718	370	514	500	1920	575	1000	873	303
48	640	50	1743	280	620	425	1962	505	865	833	358
50	640	50	1743	280	620	425	1962	505	865	833	358
53	640	50	1890	355	620	500	2108	580	1000	908	358
56	640	50	2082	450	620	600	2301	680	1200	1008	365

E4B	Fitting							
	Ø s	d_s x l_{max}	t	t_2	t_3	u	w_1	w_2
35	24	M20x85	1005	325	695	396	253	82
36	24	M20x85	1065	385	755	396	253	82
40	24	M20x120	1157	477	847	396	253	82
42	28	M24x100	1230	390	820	460	266	90
43	28	M24x100	1304	464	894	460	266	90
45	28	M24x120	1356	516	946	460	266	90
47	28	M24x250	1527	687	1117	460	266	90
48	35	M30x120	1524	504	1014	560	344	105
50	35	M30x120	1524	504	1014	560	344	105
53	35	M30x180	1670	650	1160	560	344	105
56	35	M30x250	1858	838	1348	560	344	105

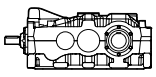

E4B	v	[l]	Kg *
35	295	67	1300
36	330	77	1440
40	320	99	1640
42	360	108	2170
43	405	125	2370
45	380	145	2600
47	435	205	3170
48	355	211	3760
50	355	211	3910
53	450	268	4450
56	510	388	5370

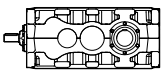

E4B	v	[l]	Kg *
35	205	67	1390
36	235	77	1550
40	230	99	1780
42	260	108	2300
43	300	125	2550
45	260	145	2880
47	265	205	3610
48	265	211	3970
50	265	211	4170
53	275	268	4780
56	275	388	5820

***Provided weight values are without oil filling and may differ slightly according to specific product configuration.**

Dimensions l., m. and w. for grease lubricated labyrinth seals, on request.

DANA
BREVINI®
Motion Systems

E2H, E3H, E4H, E3B, E4B, E3C, E4C ... -R1 MONOBLOCK HOUSING

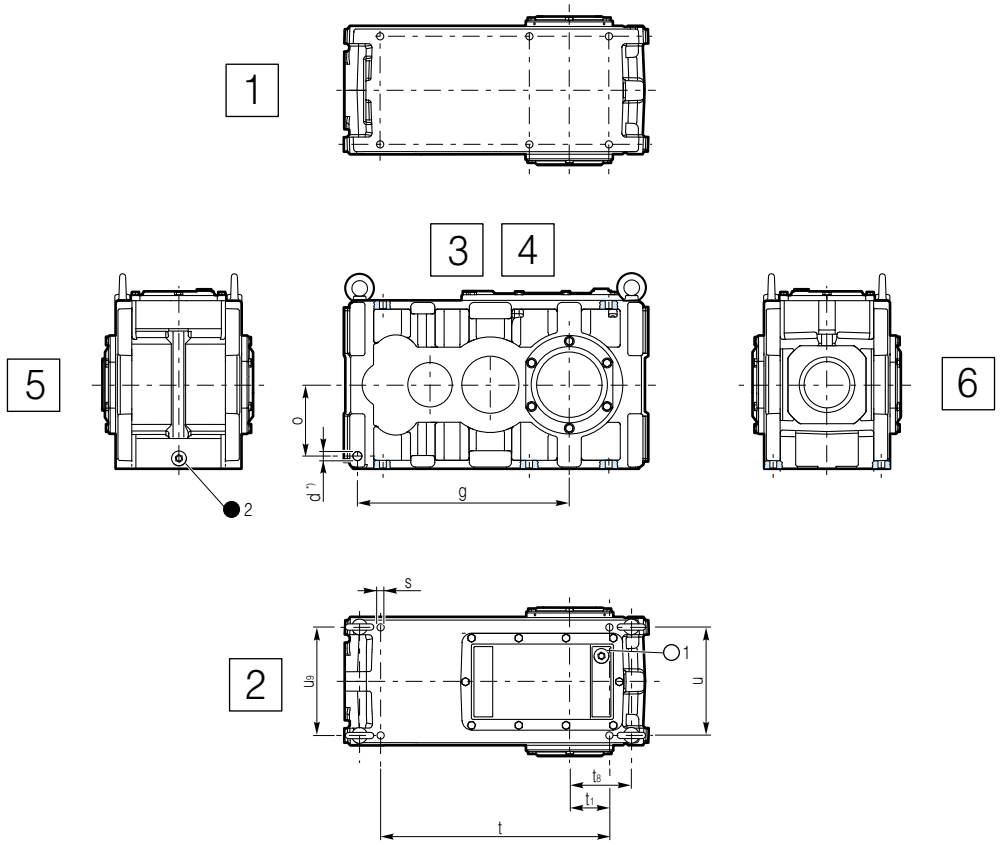

Optional housing bores only on request

		Mounting surface [2]								*)	
		Ø s	d_s x l_{max}	t	t_1	t_8	t_9	u	u_9	○1	●2
E2H - E3H - E4H E3B - E4B	18	14.5	M12x55	486	87	131	564	248	248	G 1 1/4	G 3/4
	19	14.5	M12x55	548	118	164	627	248	248		
	20	14.5	M12x55	596	143	189	675	248	248		
	22	18.5	M16x65	622	113	162	713	306	303		G 1 1/4
	25	18.5	M16x65	736	169	221	830	306	303		
	26	24	M20x80	752	132	196	867	360	360		
	28	24	M20x80	752	132	196	867	360	360		
	31	24	M20x80	889	201	261	999	360	360		

***) Threaded acc. to ISO 228**

		Mounting surface [3] + [4]			
		Ø d 1)	T_A 1) [Nm] 10.9	g	o
E2H - E3H - E4H E3B - E4B	18	26 H9	550	457	155
	19	26 H9	550	487	167
	20	26 H9	550	510	190
	22	30 H9	950	580	190
	25	30 H9	950	637	220
	26	35 H9	1900	706	227
	28	35 H9	1900	706	227
	31	35 H9	1900	773	262

1) Necessary tightening torques T_A for shaft screws with head support according to DIN 912,934 etc., strenght category 10.9 with supposed coefficient of friction μ = 0,125 for non treated, oiled screws according to the VDI directions 2230.

OPTIONAL HOUSING HOLES

E2H, E3H, E4H, E3B, E4B, E3C, E4C ... -S5 MONOBLOCK HOUSING

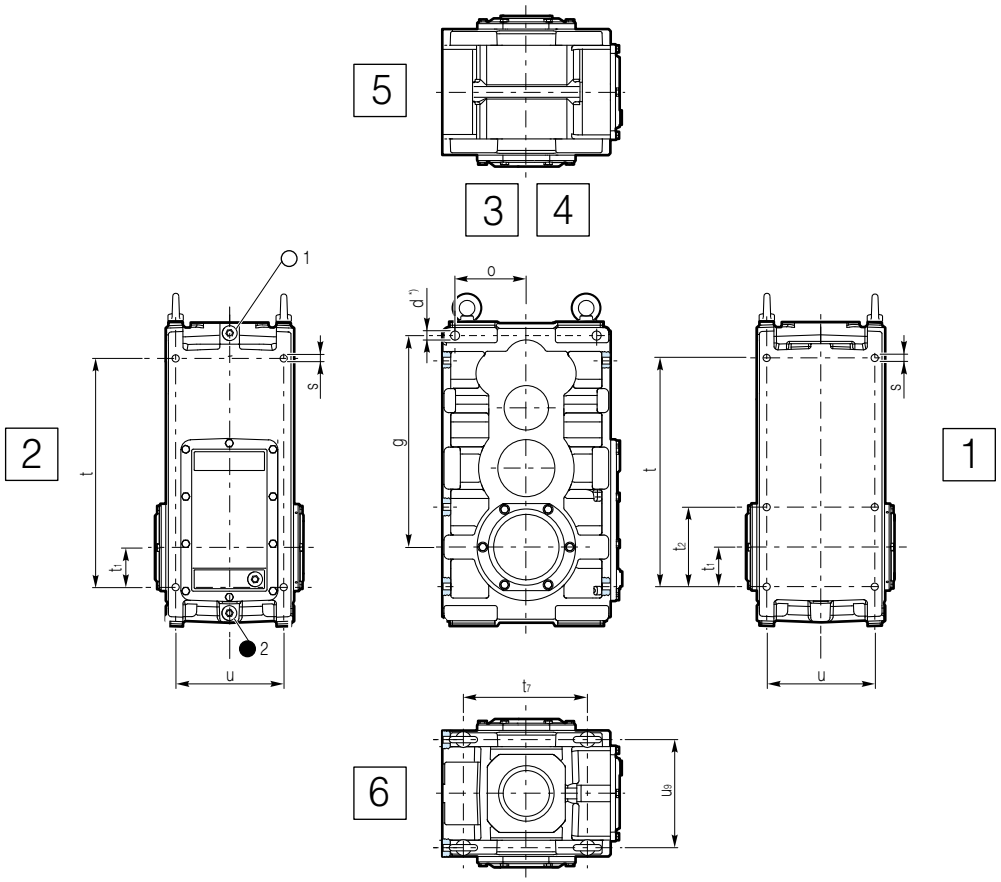

Optional housing bores only on request

		Mounting surface								*)	
		[1] + [2]						[6]			
		Ø s	d_s x l_{max}	t	t_1	t_2	u	t_7	u_9	○ 1	● 2
E2H - E3H - E4H E3B - E4B E3C - E4C	18	14.5	M12x55	486	87	175	248	260	248		
	19	14.5	M12x55	548	118	237	248	284	248		
	20	14.5	M12x55	596	143	285	248	330	248	G 3/4	G 3/4
	22	18.5	M16x65	622	113	226	306	326	303		
	25	18.5	M16x65	736	169	340	306	384	303		
	26	24	M20x80	752	132	265	360	386	360		
	28	24	M20x80	752	132	265	360	386	360	G 1 1/4	G 1 1/4
	31	24	M20x80	889	201	265	360	456	360		

***) Threaded acc. to ISO 228**

		Mounting surface			
		[3] + [4]			
		Ø d 1)	T_A 1) [Nm] 10.9	g	o
E2H - E3H - E4H E3B - E4B	18	26 H9	550	457	155
	19	26 H9	550	487	167
	20	26 H9	550	510	190
	22	30 H9	950	580	190
	25	30 H9	950	638	220
	26	35 H9	1900	706	227
	28	35 H9	1900	706	227
	31	35 H9	1900	773	262

1) Necessary tightening torques T_A for shaft screws with head support according to DIN 912,934 etc., strenght category 10.9 with supposed coefficient of friction μ = 0,125 for non treated, oiled screws according to the VDI directions 2230.

E2H, E3H, E4H, E3B, E4B, E3C, E4C ... -T6 MONOBLOCK HOUSING

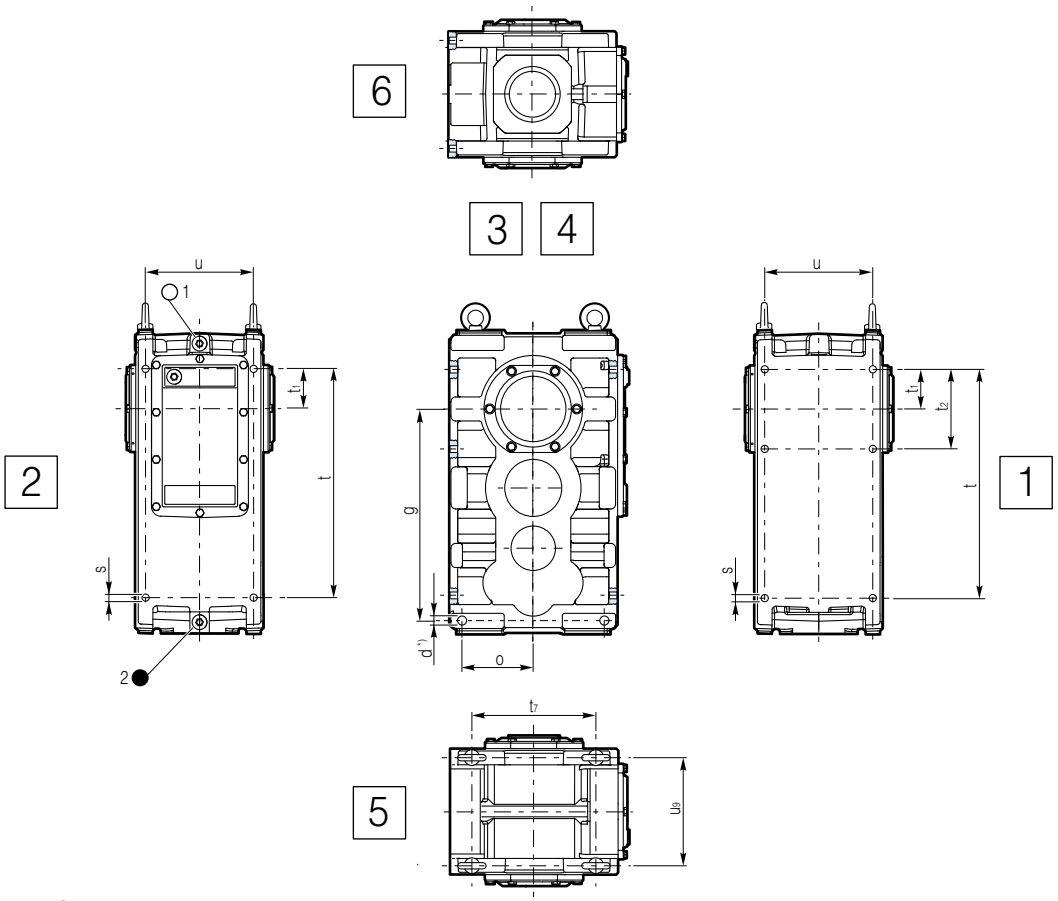

Optional housing bores only on request

		Mounting surface								*)	
		[1] + [2]						[5]			
		Ø s	d_s x l_{max}	t	t_1	t_2	u	t_7	u_9	○ 1	● 2
E2H - E3H - E4H E3B - E4B E3C - E4C	18	14.5	M12x55	486	87	175	248	260	248		
	19	14.5	M12x55	548	118	237	248	284	248		
	20	14.5	M12x55	596	143	285	248	330	248	G 3/4	G 3/4
	22	18.5	M16x65	622	113	226	306	326	303		
	25	18.5	M16x65	736	169	340	306	384	303		
	26	24	M20x80	752	132	265	360	386	360		
	28	24	M20x80	752	132	265	360	386	360	G 1 1/4	G 1 1/4
	31	24	M20x80	889	201	265	360	456	360		

***) Threaded acc. to ISO 228**

		Mounting surface			
		[3] + [4]			
		Ø d 1)	T_A 1) [Nm] 10.9	g	o
E2H - E3H - E4H E3B - E4B	18	26 H9	550	457	155
	19	26 H9	550	487	167
	20	26 H9	550	510	190
	22	30 H9	950	580	190
	25	30 H9	950	638	220
	26	35 H9	1900	706	227
	28	35 H9	1900	706	227
	31	35 H9	1900	773	262

1) Necessary tightening torques T_A for shaft screws with head support according to DIN 912,934 etc., strenght category 10.9 with supposed coefficient of friction μ = 0,125 for non treated, oiled screws according to the VDI directions 2230.

E2H, E3H, E4H, E3B, E4B ... -R1

SPLIT HOUSING type 12

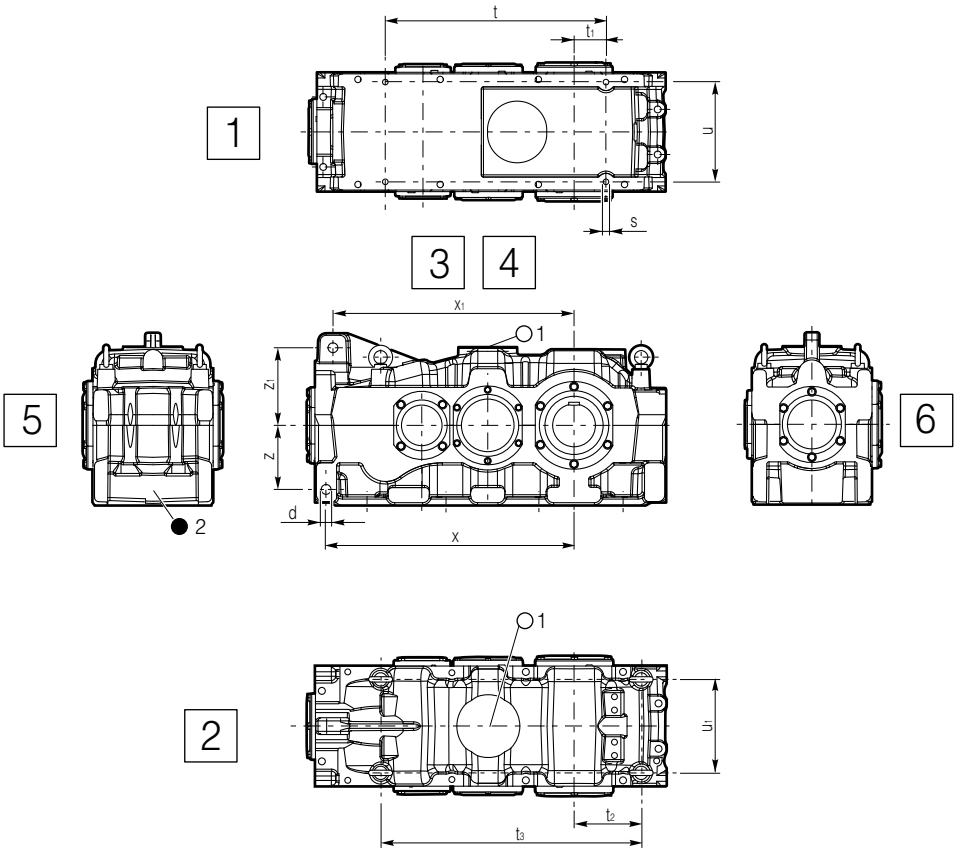

Optional housing bores only on request

		Mounting surface							*)	
			[1]			[2]				
		Ø s	t	t_1	u	t_2	t_3	u_1	○1	●2
E2H - E3H - E4H E3B - E4B	35	21	832	120	376	250	976	350	G 2"	G 1 1/4"
	36	21	867	125	376	280	1040	350		
	40	21	996	168	376	348	1168	350		
	42	26.5	1015	145	435.2	305	1200	420		
	43	26.5	1052	145	435.2	436	1278	420		
	45	26.5	1085	145	435.2	366	1334	420		
	47	26.5	1290	210	435.2	472	1534	420		
	48	32	1271	180	529	365	1478	510		
	50	32	1271	180	529	365	1478	510		
	53	32	1356	195	529	474	1648	510		
	56	32	1494	240	529	565	1835	510		

***) Threaded acc. to ISO 228**

		Ø d	x	z	x_1	z_1
E2H - E3H - E4H E3B - E4B	35	Ø45 H9	925	235	902	290
	36	Ø45 H9	955	265	932	290
	40	Ø45 H9	1002	310	979	290
	42	Ø52 H9	1134	285	1117	310
	43	Ø52 H9	1171	313	1154	310
	45	Ø52 H9	1200	355	1183	310
	47	Ø52 H9	1285	420	1269	310
	48	Ø65 H9	1392	340	1369	335
	50	Ø65 H9	1392	340	1369	335
	53	Ø65 H9	1463	415	1440	335
	56	Ø65 H9	1556	515	1533	335

E2H, E3H, E4H, E3B, E4B ... -R1

SPLIT HOUSING type 11

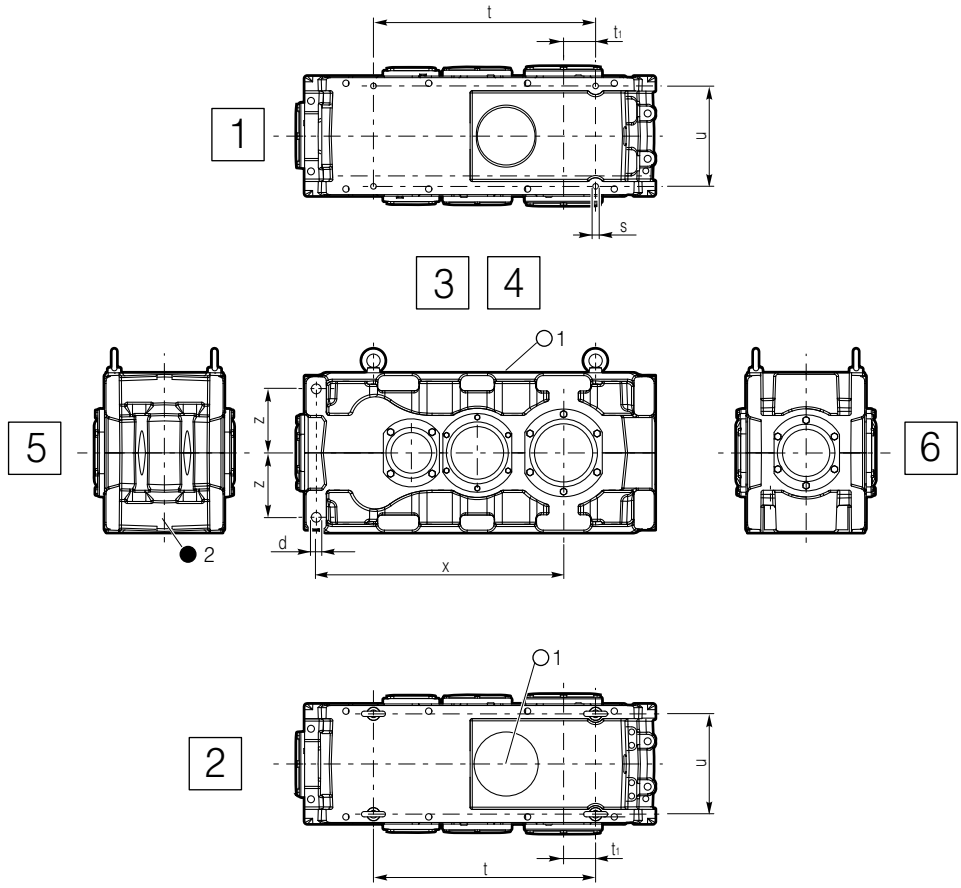

Optional housing bores only on request

		Mounting surface [2]				*)	
		Ø s	t	t_1	u	○1	●2
E2H - E3H - E4H E3B - E4B	35	21	832	120	376	G 2"	G 1 1/4"
	36	21	867	125	376		
	40	21	996	168	376		
	42	26.5	1015	145	435.2		
	43	26.5	1052	145	435.2		
	45	26.5	1085	145	435.2		
	47	26.5	1290	210	435.2		
	48	32	1271	180	529		
	50	32	1271	180	529		
	53	32	1356	195	529		
	56	32	1494	240	529		

*) Threaded acc. to ISO 228

		Ø d	x	z
E2H - E3H - E4H E3B - E4B	35	Ø45 H9	925	235
	36	Ø45 H9	955	265
	40	Ø45 H9	1002	310
	42	Ø52 H9	1134	285
	43	Ø52 H9	1171	313
	45	Ø52 H9	1200	355
	47	Ø52 H9	1285	420
	48	Ø65 H9	1392	340
	50	Ø65 H9	1392	340
	53	Ø65 H9	1463	415
	56	Ø65 H9	1556	515

SPLIT HOUSING

Housing type 21

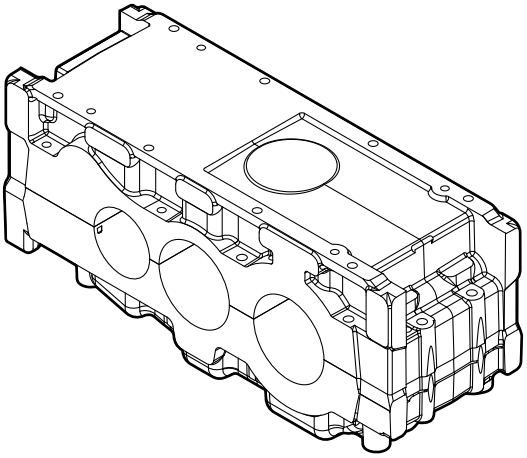

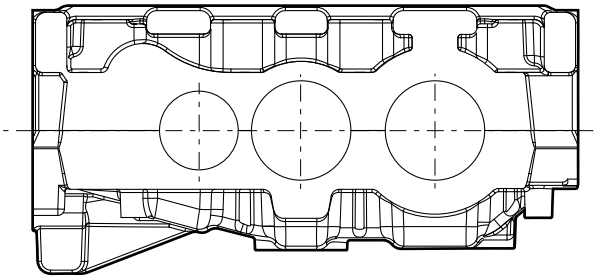

Available from sizes 35 to 56.
On request.

SPLIT HOUSING

Housing type 22

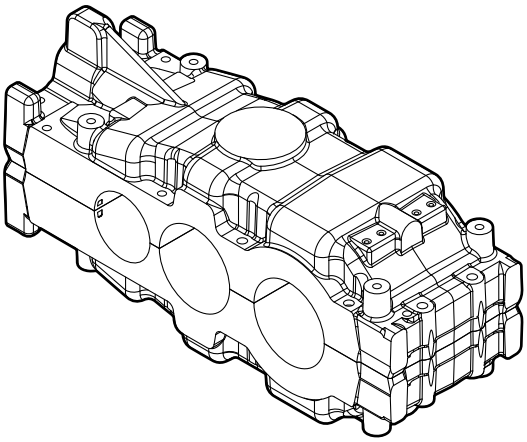

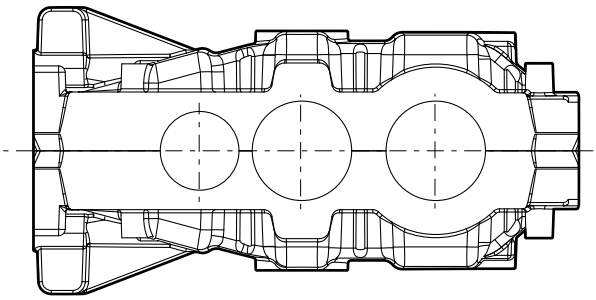

Available from sizes 35 to 56.
On request.

E2H...K...IEC

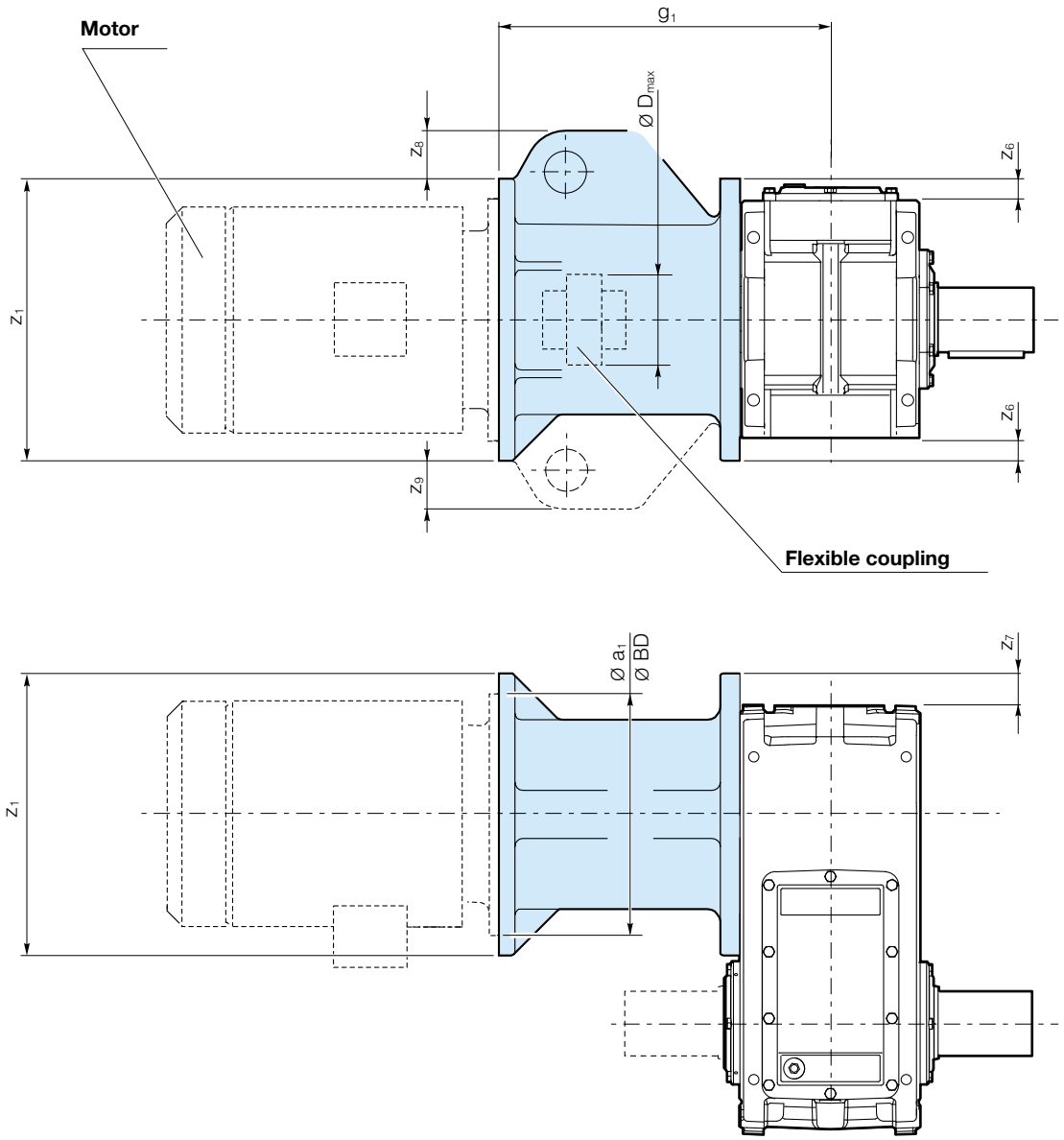

When bell housing is applied:
*** Double output shaft available upon request**
*** Gearbox mounting on motor side not feasible**

Appropriate flexible coupling is part of Dana supply.

E2H...K...IEC

E2H...K.. IEC..												
	z_6	z_7	Position of motor 3		Position of motor 4		Ø D_{max} **	g_1	z_1	Motor	
			z_8	z_9	z_8	z_9				IEC	Ø a_1
18	–	–	–	–	–	–	320	467	Ø 660	315 M/S	660
			45			45		437	Ø 550	280 M/S	550
										250 M	
19			–			–	245	419	Ø 450	225 M/S	450
										200 L	400
			50		50		195	389	Ø 350	180 L/M	350
20	–	–	–	–	–	–	320	467	Ø 660	315 L/M	660
				45	45			437	Ø 550	280 M/S	550
										250 M	
				–	–		245	419	Ø 450	225 M/S	450
										200 L	400
			50		50		195	389	Ø 350	180 L/M	350
22	–	–	–	–	–	–	325	539	Ø 660	315 M/S	660
								509	Ø 494	280 M/S	550
										250 M	
25	–	–	–	–	–	–	245		Ø 400	225 M	450
										*	400
										*	350
26 28	–	–	–	–	–	–	325	570	Ø 660	315 M/S	660
31	–	–	–	–	–	–		540	Ø 494	280 M/S	550
										250 M	
										*	450

*** Other motor bell housings available**
**** Maximum diameter of coupling**
For more information please contact the Dana area contact person.

E3H...K...IEC

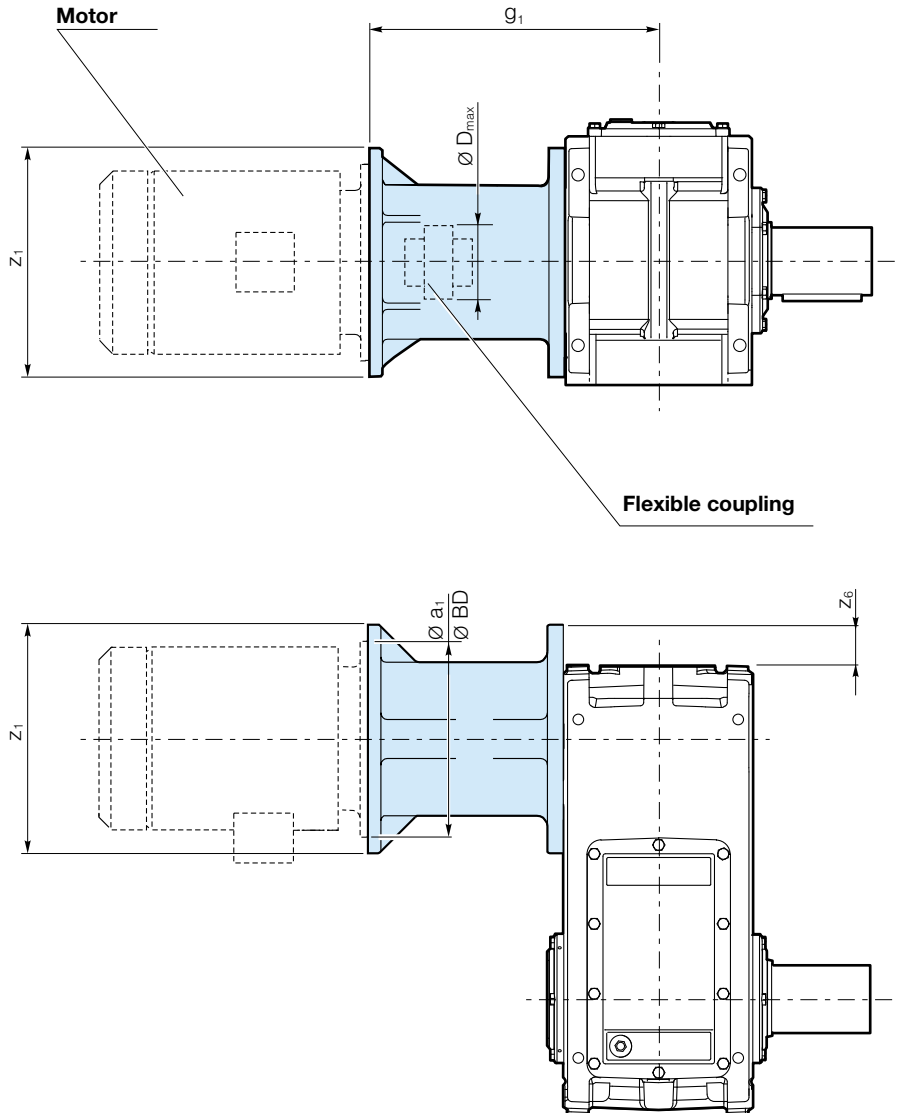

When bell housing is applied:
*** Double output shaft available upon request**
*** Gearbox mounting on motor side not feasible**

Appropriate flexible coupling is part of Dana supply.

E3H...K...IEC

E3H...K...IEC						
					Motor	
	z_6	Ø D_{max} **	g_1	z_1	IEC	Ø a_1
18	86	325	477	Ø 494	280 S	550
					250 M	
					225 L/M	450
19	77	195	417	Ø 400	200 L	400
20			397	Ø 350	180 L/M	350
					160 L/M	
			367	Ø 300	132 M/S	300
			345	Ø 250	112 M	250
22	63	325	539	Ø 660	315 M/S	660
			509	Ø 494	280 M/S	550
					250 M	
25	29	245	509	Ø 400	225 M/S	450
					200 L	400
					180 L/M	350
					160 L/M	
	9	210	457	Ø 256	132 M/S	300
26	29	325	570	Ø 660	315 M/S	660
			540	Ø 494	280 M/S	550
					250 M/S	
28	–	245		Ø 400	200 L	450
31					180 L/M	400
					160 L/M	350
		210	488		*	

E3H...K...IEC						
					Motor	
	z_6	Ø D_{max} **	g_1	z_1	IEC	Ø a_1
35	–	325	682	Ø660	315 M/S	660
			652	Ø494	280 M/S	550
40					250 M/S	
					*	
42	–	325	682	Ø660	315 M/S	660
45			652	Ø494	280 M/S	550
					250 M/S	
47					*	450

*** Other motor bell housings available**
**** Maximum diameter of coupling**
For more information please contact the Dana area contact person.

E4H...K...IEC

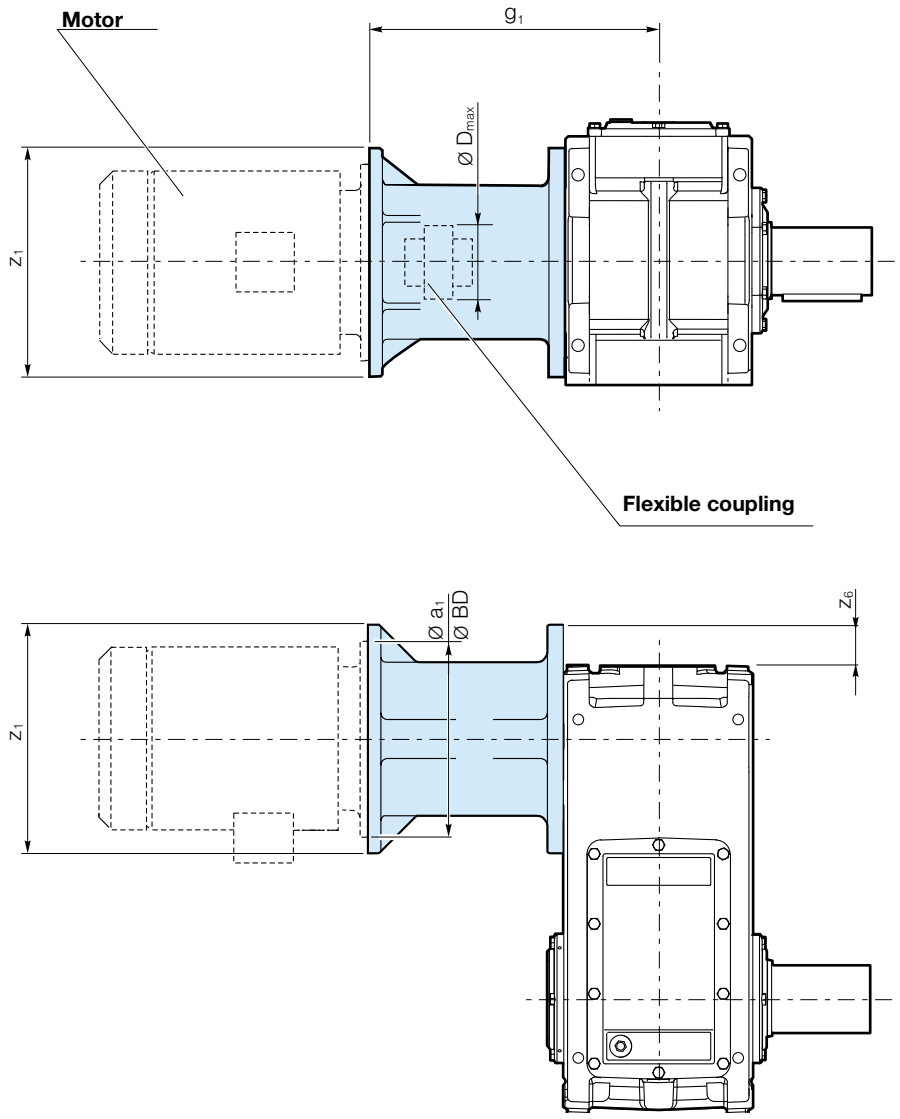

When bell housing is applied:
*** Double output shaft available upon request**
*** Gearbox mounting on motor side not feasible**

Appropriate flexible coupling is part of Dana supply.

E4H...K...IEC

E4H...K...IEC						
					Motor	
	z_6	Ø D_{max}**	g_1	z_1	IEC	Ø a_1
18 19 20	58	195	353	Ø 350	180 L/M	350
					160 L/M	
		155	319	Ø 300	132 M/S	300
			299	Ø 250	112 M	250
					100 L	
		125	289	Ø 200	90 L	200
22 25 26	54	195	449	Ø 400	200 L	400
			429	Ø 350	180 L/M	350
					160 L/M	
			399	Ø 300	132 M/S	300
		175	377	Ø 250	112 M	250
					100 L	
		124	392	Ø 200	90 L	200
28 31	27	245	478	Ø350	132 M/S	300
					200 L	400
	–	195	433	Ø350	180 L/M	350
					160 L/M	
			403	Ø300	132 M/S	300
		175	381	Ø250	112 M	250

E4H...K...IEC						
					Motor	
	z_6	Ø D_{max}**	g_1	z_1	IEC	Ø a_1
35 40	–	325	613	Ø 660	315 M/S	660
			583	Ø 494	280 M/S	550
					250 M	
				Ø 300	225 M/S	450
		295	518	Ø 400	200 L	400
					180 M/L	350
		245			160 L/M	
42 45 47	–	325	662	Ø 660	315 M/S	660
			632	Ø 494	280 M/S	550
					250 M	
					225 M/S	450
		295	567	Ø 460	200 L	400
		245			180 M/L	350

**** Maximum diameter of coupling**

For more information please contact the Dana area contact person.

E3B...K...IEC

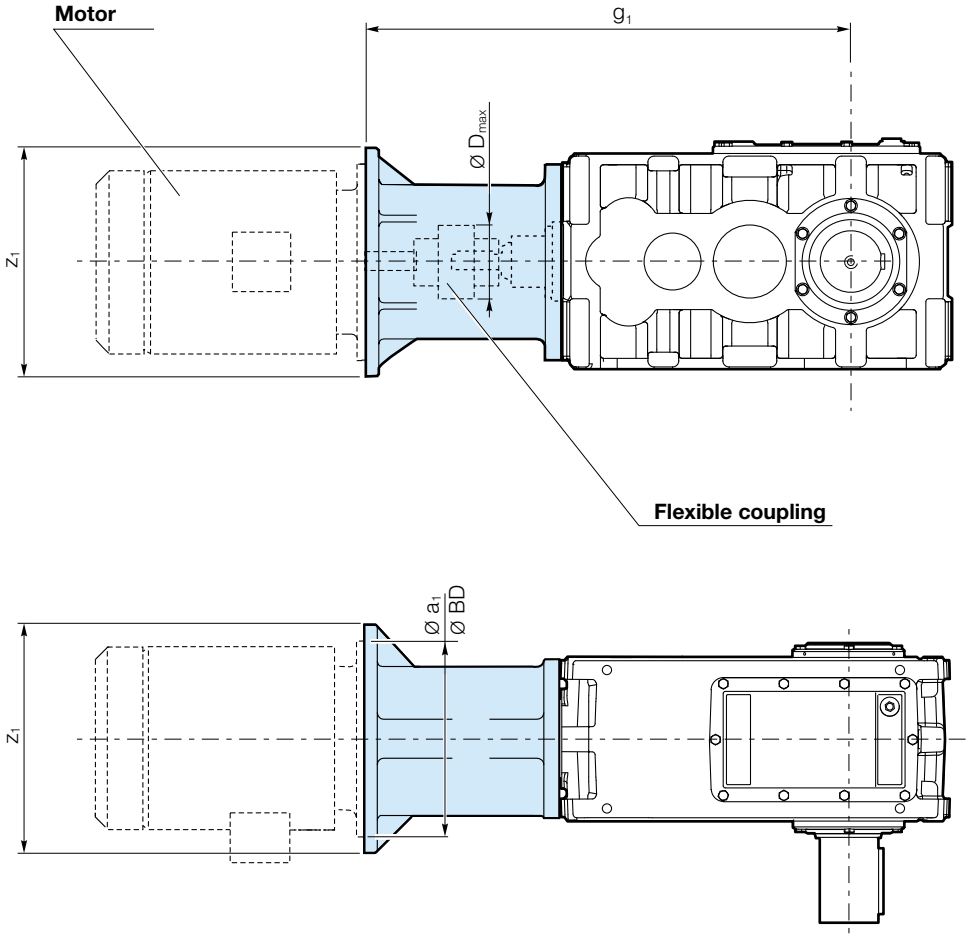

Appropriate flexible coupling is part of Dana supply.

E3B...K...IEC

E3B...K...IEC								
	Position of gear case					Motor		
	R10	R11						
	z_6	z_6	Ø D_{max}**	g_1	z_1	IEC	Ø a_1
18	–	–	182	845	Ø 550	280 S	550
						250 M	
					Ø 450	225 M/S	450
				815	Ø 350	200 L	400
						180 L/M	350
						160 L/M	
						132 M/S	300
			155	765	Ø 260	*	300
						*	250
						*	200
19	–	–	182	876	Ø 550	280 S	550
						250 M	
					Ø 450	225 M/S	450
				846	Ø 350	200 L	400
						180 L/M	350
						160 L/M	
						132 M/S	300
			155	796	Ø 260	*	300
						*	250
						*	200
20	–	–	182	899	Ø 550	280 S	550
						250 M	
					Ø 450	225 M/S	450
				869	Ø 350	200 L	400
						180 L/M	350
						160 L/M	
						132 M/S	300
			155	819	Ø 260	*	300
						*	250
						*	200
22	23	–	250	1080	Ø 660	315 M/S	660
				1050	Ø 494	280 M/S	550
						250 M	
						225 M/S	450
			210	935	Ø 354	200 L	400
						180 L/M	350
						160 LM	
				990	Ø 300	*	300
						*	250
25	–	–	250	1138	Ø 660	315 M/S	660
				1108	Ø 494	280 M/S	550
						250 M	
						225 M/S	450
			210	993	Ø 354	200 L	400
						180 L/M	350
						160 L/M	
				1048	Ø 300	*	300
						*	250

E3B...K...IEC								
	Position of gear case					Motor		
	R10	R11						
	z_6	z_6	Ø D_{max}**	g_1	z_1	IEC	Ø a_1
26 28	–	–	250	1213	Ø 660	315 M/S	660
				1183	Ø 494	280 M/S	550
						250 M	
						225 M/S	450
			210	1153	Ø 454	200 L	400
						*	350
				1123	Ø 300	*	300
						*	250
31	–	–	250	1281	Ø 660	315 M/S	660
				1251	Ø 494	280 M/S	550
						250 M	
						225 M/S	450
			210	1221	Ø 354	200 L	400
						*	350
				1191	Ø 300	*	300
						*	250
35	–	–	360	1487	Ø 660	315 M/S	660
				1457	Ø 494	280 M/S	550
						250 M	
						*	450
				1390	Ø 404	*	400
						*	350
36	–	–	360	1517	Ø 660	315 M/S	660
				1487	Ø 494	280 M/S	550
						250 M	
						*	450
				1390	Ø 404	*	400
						*	350
40	–	–	360	1564	Ø 660	315 M/S	660
				1534	Ø 494	280 M/S	550
						250 M	
						*	450
				1467	Ø 404	*	400
						*	350
42	–	–	360	1710	Ø 660	315 M/S	660
				1680	Ø 494	280 M/S	550
						*	450
				1613	Ø 404	*	400
						*	350
43	–	–	360	1747	Ø 660	315 M/S	660
				1717	Ø 494	280 M/S	550
						*	450
				1613	Ø 404	*	400
						*	350
45	–	–	360	1776	Ø 660	315 M/S	660
				1746	Ø 494	280 M/S	550
						*	450
				1679	Ø 404	*	400
						*	350
47	–	–	360	1862	Ø 660	315 M/S	660
				1832	Ø 494	280 M/S	550
						*	450
				1765	Ø 404	*	400
						*	350

*** Other motor bell housings available**
**** Maximum diameter of coupling**
For more information please contact the Dana area contact person.

E4B...K...IEC

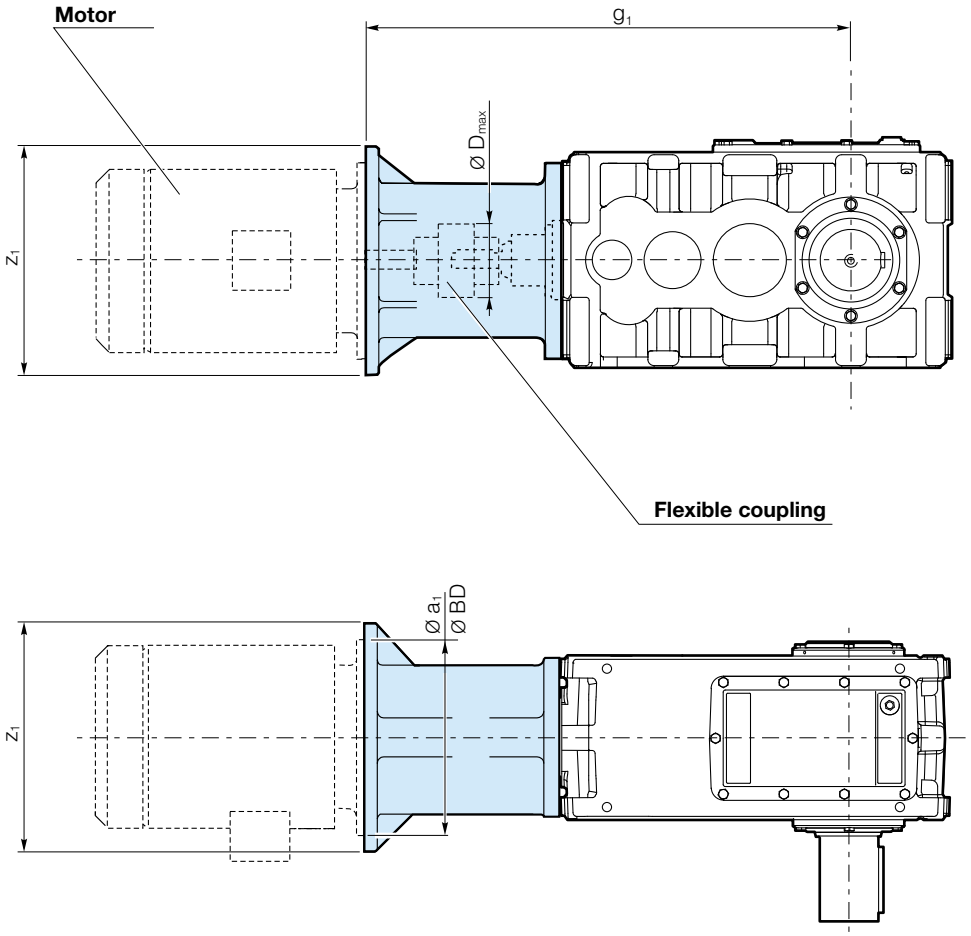

Appropriate flexible coupling is part of Dana supply.

E4B...K...IEC

E4B...K...IEC							
	Position of gear case					Motor	
	R10	R11					
	z_6	z_6	Ø D_{max}**	g_1	z_1	IEC	Ø a_1
18	–	–	182	845	Ø 550	*	550
					Ø 450	*	450
				815	Ø 350	*	400
						180 M	350
						160 L/M	
						132 M/S	300
			155	765	Ø 260	*	300
						112 M	250
						100 L	
						90 L	200
19	–	–	182	876	Ø 550	*	550
					Ø 450	*	450
				846	Ø 350	*	400
						180 M	350
						160 L/M	
						132 M/S	300
			155	796	Ø 260	*	300
						112 M	250
						100 L	
						90 L	200
20	–	–	182	899	Ø 550	*	550
					Ø 450	*	450
				869	Ø 350	*	400
						180 M	350
						160 L/M	
						132 M/S	300
			155	819	Ø 260	*	300
						112 M	250
						100 L	
						90 L/S	200
22	23	–	250	1050	Ø 494	*	550
						225 S	450
			210	1020	Ø 354	200 L	400
						180 L/M	350
						160 L/M	
				990	Ø 300	132 M/S	300
						112 M	250
						100 L	

E4B...K...IEC							
	Position of gear case					Motor	
	R10	R11					
	z_6	z_6	Ø D_{max}**	g_1	z_1	IEC	Ø a_1
25	–	–	250	1108	Ø 494	*	550
						225 S	450
			210	1078	Ø 354	200 L	400
						180 L/M	350
						160 L/M	
				1048	Ø 300	132 M/S	300
						112 M	250
						100 L	
26 28	–	–	250	1183	Ø 494	250 M	550
			210	1153	Ø 354	225 M/S	450
						200 L	400
						180 L/M	350
						160 L	
				1123	Ø 300	132 M/S	300
						*	250
31	–	–	250	1251	Ø 494	250 M	550
						225 M/S	450
			210	1221	Ø 354	200 L	400
						180 L/M	350
						160 L/M	
				1191	Ø 300	132 M/S	300
						*	250
35	–	–	360	1457	Ø 494	280 M/S	550
						250 M	
						225 M/S	450
				1390	Ø 404	200 L	400
						180 L/M	350
						160 L	
40	–	–	360	1534	Ø 494	280 M/S	550
						250 M	
						225 M/S	450
				1467	Ø 404	200 L	400
						180 L/M	350
						160 L	
42	–	–	360	1710	Ø 660	315 M/S	660
				1680	Ø 494	280 M/S	550
						250 M	450
						225 M/S	
				1613	Ø 404	200 L	400
						180 L	350
45	–	–	360	1776	Ø 660	315 M/S	660
				1746	Ø 494	280 M/S	550
						250 M	450
						225 M/S	
				1679	Ø 404	200 L	400
						180 L	350
47	–	–	360	1862	Ø 660	315 M/S	660
				1832	Ø 494	280 M/S	550
						250 M/S	450
						225 M/S	
				1765	Ø 404	200 L	400
						180 L	350

*** Other motor bell housings available**
**** Maximum diameter of coupling**
For more information please contact the Dana area contact person.

E2H...K...NEMA

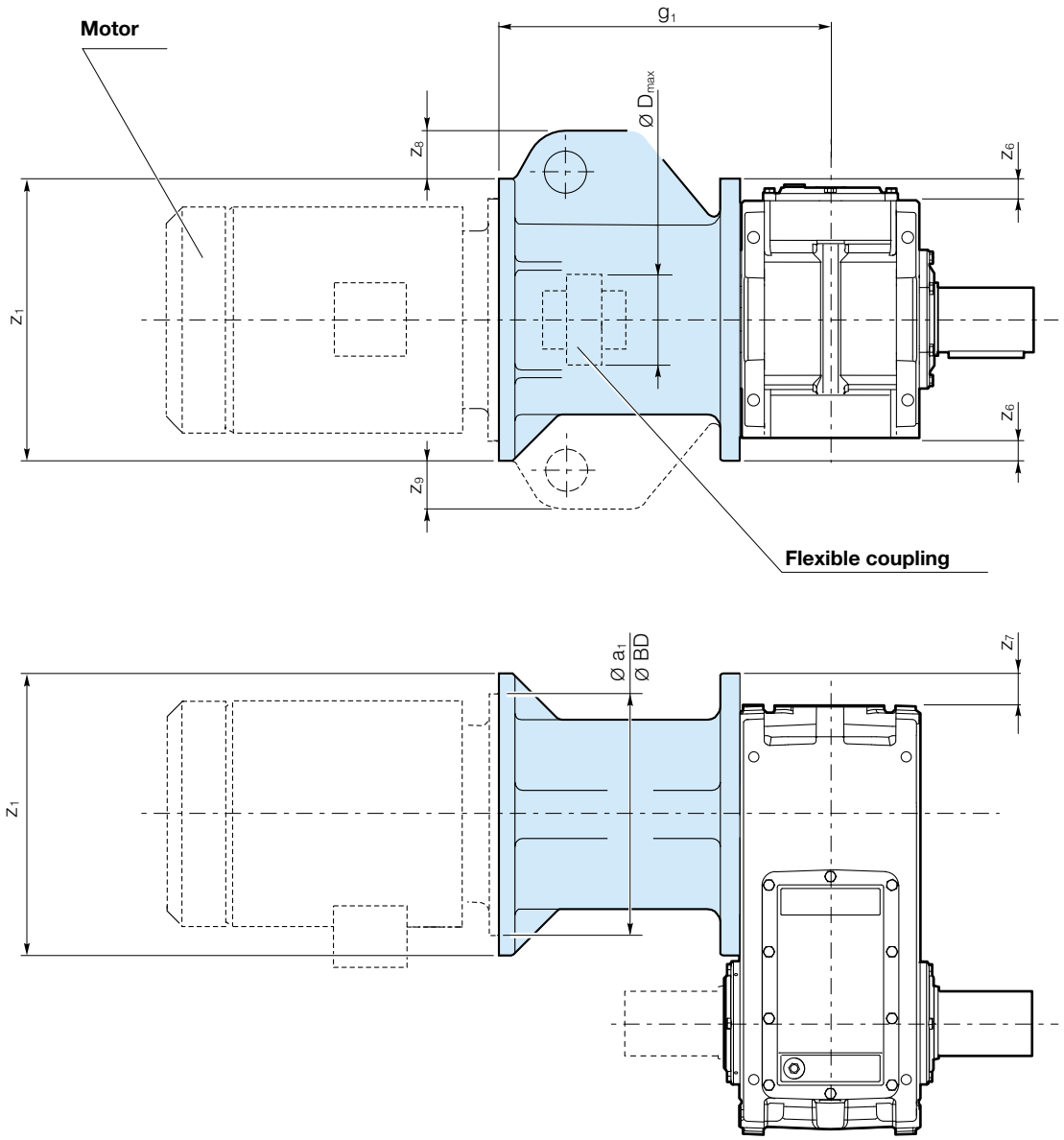

When bell housing is applied:
*** Double output shaft available upon request**
*** Gearbox mounting on motor side not feasible**

Appropriate flexible coupling is part of Dana supply.

E2H...K...NEMA

E2H...K.. NEMA..										
	z_6	Position of motor 3		Position of motor 4		Ø D_{max} **	g_1	z_1	Motor NEMA	Motor Ø BD
		z_8	z_9	z_8	z_9					
18	–	–	–	–	–	320	467	Ø 660	447T	455
		45		–	45		437	Ø 550	445T	455
19									405T	395
		–			–	245	419	Ø 450	326T	395
		50		50		195	389	Ø 350	286T	280
20	–	–	–	–	–	320	467	Ø 660	447T	455
			45	45			437	Ø 550	445T	455
									405T	395
			–	–		245	419	Ø 450	326T	395
		50		50		195	389	Ø 350	286T	280
22	–	–	–	–	–	325	539	Ø 660	447T	455
							509	Ø 494	445T	455
									405T	395
25	–	–	–	–	–	245		Ø 400	405T	395
26 28	–	–	–	–	–	325	570	Ø 660	447T	455
31	–	–	–	–	–		540	Ø 494	445T	455
									405T	395

*** Other motor bell housings available**
**** Maximum diameter of coupling**
For more information please contact the Dana area contact person.

E3H...K...NEMA

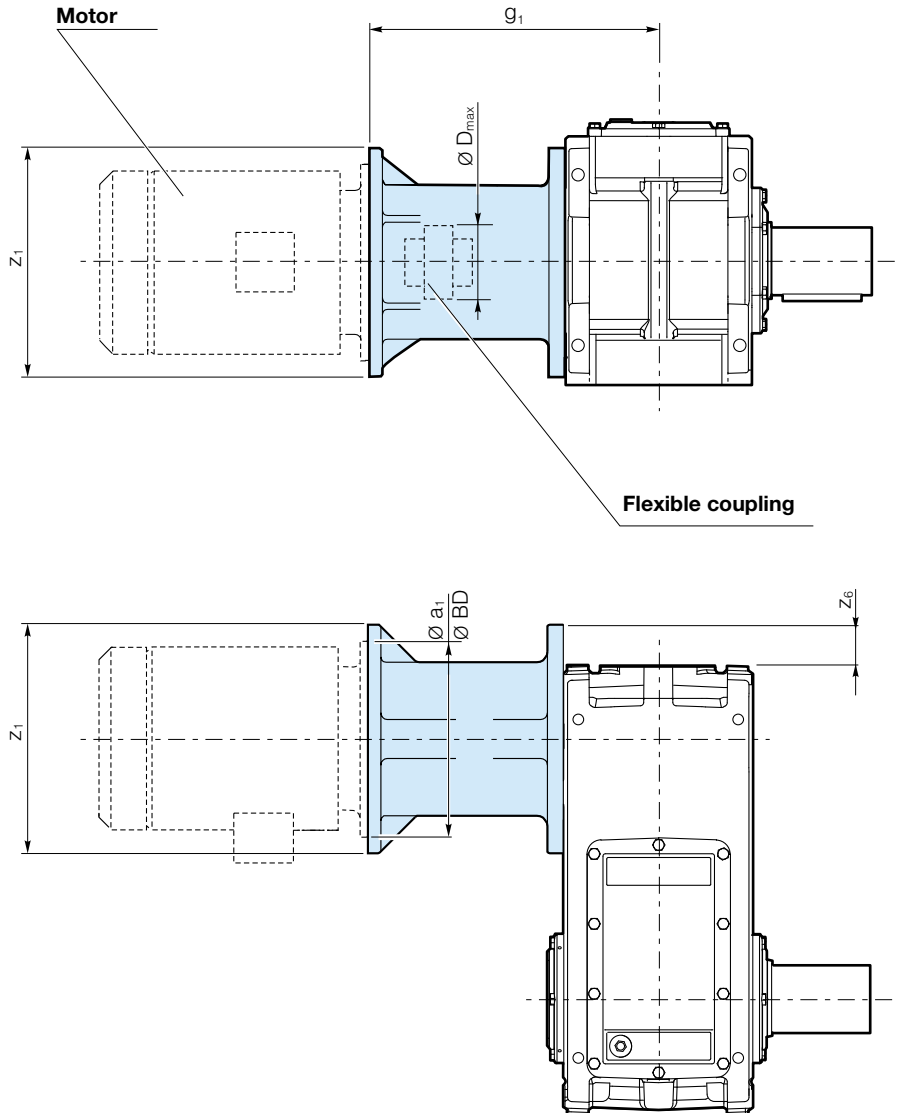

When bell housing is applied:
*** Double output shaft available upon request**
*** Gearbox mounting on motor side not feasible**

Appropriate flexible coupling is part of Dana supply.

E3H...K...NEMA

E3H...K...NEMA					
				Motor	
	Ø D_{max}**	g_1	j_1	NEMA	Ø BD
18	325	477	Ø 494	445T	455
				405T	395
				326T	345
19	195	417	Ø 400	326T	345
20	195	397	Ø 350	286T	229
		367	Ø 300	215T	280
		345	Ø 250	213T	225
22	325	539	Ø 660	447T	455
		509	Ø 494	445T	455
				405T	395
22	245	509	Ø 400	326T	345
				286T	286
25	210	457	Ø 256	215T	225

E3H...K...NEMA					
				Motor	
	Ø D_{max}**	g_1	j_1	NEMA	Ø BD
26	325	570	Ø 660	447T	455
28		540	Ø 494	445T	455
				405T	395
31	245	540	Ø 400	286T	286

*** Other motor bell housings available**
**** Maximum diameter of coupling**
For more information please contact the Dana area contact person.

E4H...K...NEMA

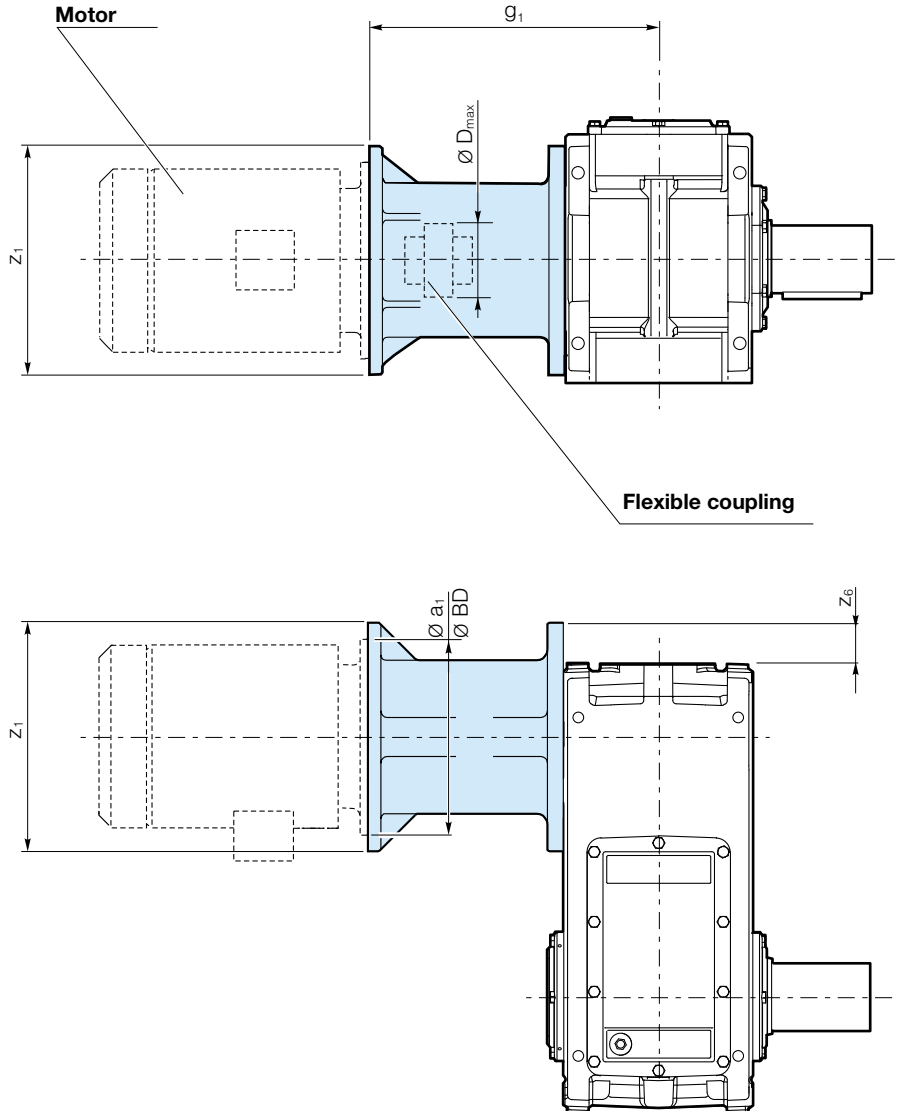

When bell housing is applied:
*** Double output shaft available upon request**
*** Gearbox mounting on motor side not feasible**

Appropriate flexible coupling is part of Dana supply.

E4H...K...NEMA

E4H...K...NEMA					
				Motor	
	Ø D_{max}**	g_1	z_1	NEMA	Ø BD
18	195	353	Ø 350	286T	280
19	155	319	Ø 300	215T	225
20		299	Ø 250	213T	225
				184T	225
	125	289	Ø 200	182T	225

E4H...K...NEMA					
				Motor	
	Ø D_{max}**	g_1	z_1	NEMA	Ø BD
22	195	449	Ø 400	324T	345
25		429	Ø 350	286T	280
26		399	Ø 300	215T	225
	175	377	Ø 250	213T	225
				184T	225
	124	392	Ø 200	182T	225

**** Maximum diameter of coupling**

For more information please contact the Dana area contact person.

E3B...K...NEMA

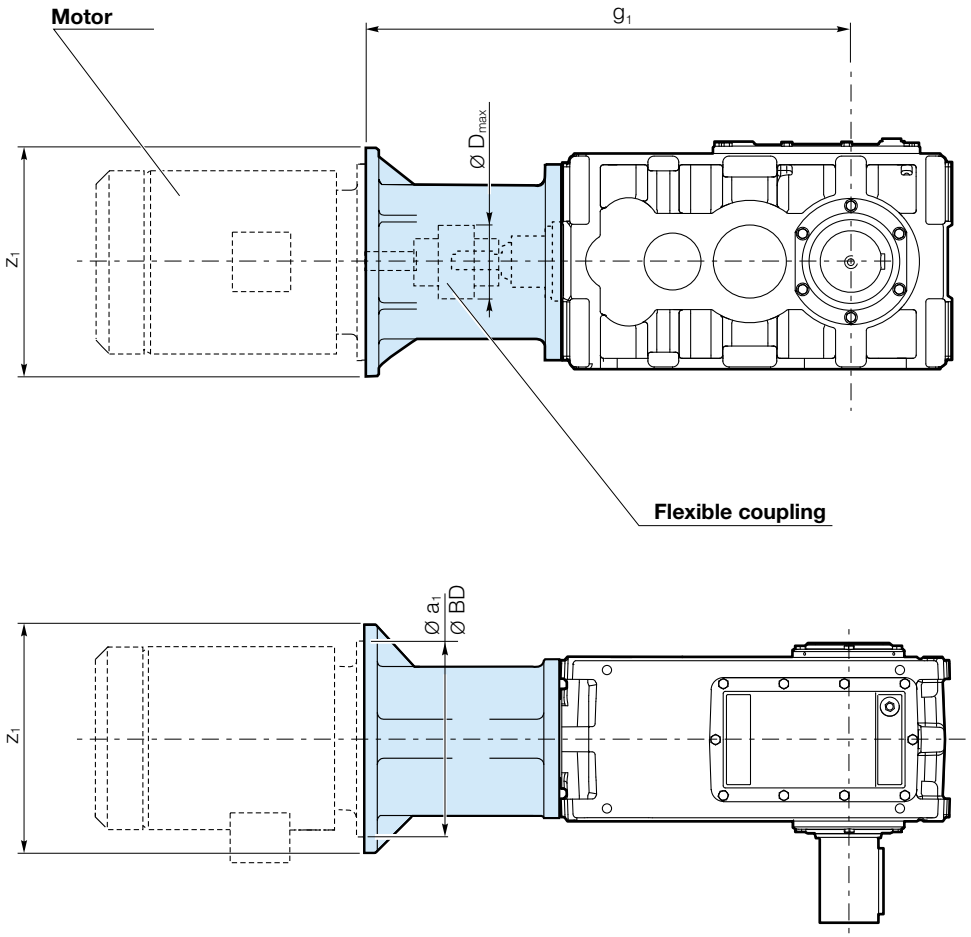

Appropriate flexible coupling is part of Dana supply.

E3B...K...NEMA

E3B...K...NEMA					
				Motor	
	Ø D_{max} **	g_1	z_1	NEMA	Ø BD
18	182	845	Ø 550	444T	455
				405T	395
			Ø 450	326T	345
		815	Ø 350	286T	280
				215T	225
19	182	876	Ø 550	444T	455
				405T	395
			Ø 450	326T	345
		846	Ø 350	286T	280
				215T	225
20	182	899	Ø 550	444T	455
				405T	395
			Ø 450	326T	345
		869	Ø 350	286T	280
				215T	225
22	250	1080	Ø 660	447T	455
		1050	Ø 494	444T	455
				405T	395
				326T	345
	210	935	Ø 354	286T	280

E3B...K...NEMA					
				Motor	
	Ø D_{max} **	g_1	z_1	NEMA	Ø BD
25	250	1138	Ø 660	447T	455
		1108	Ø 494	444T	455
				405T	395
				326T	345
	210	993	Ø 354	286T	280
26 **28**	250	1213	Ø 660	447T	455
		1183	Ø 494	444T	455
				405T	395
				326T	345
31	250	1281	Ø 660	447T	455
			Ø 494	444T	455
				405T	395
				326T	345

*** Other motor bell housings available**
**** Maximum diameter of coupling**
For more information please contact the Dana area contact person.

E4B...K...NEMA

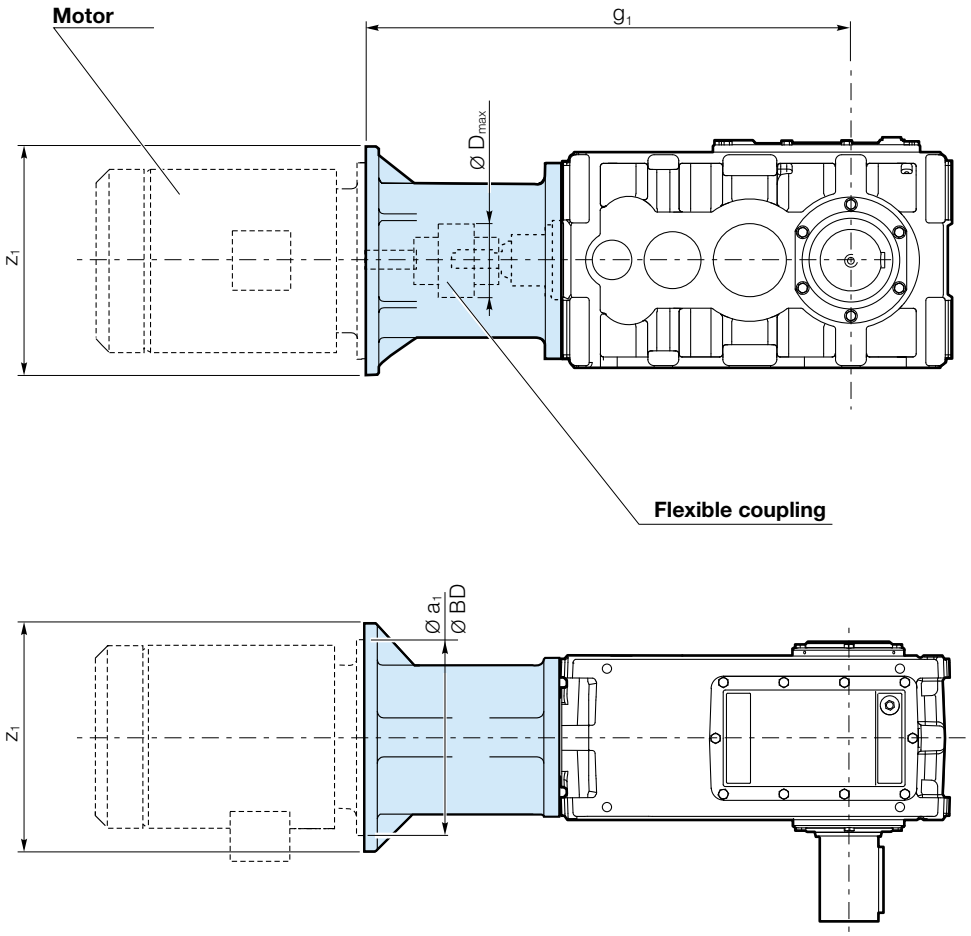

Appropriate flexible coupling is part of Dana supply.

E4B...K...NEMA

E4B...K...NEMA					
				Motor	
	Ø D_{max} **	g_1	z_1	NEMA	Ø BD
18	182	815	Ø 350	286T	280
				215T	225
	155	765	Ø 260	213T	225
				184T	225
				182T	225
19	182	846	Ø 350	286T	280
				215T	225
	155	796	Ø 260	213T	225
				184T	225
				182T	225
20	182	869	Ø 350	286T	280
				215T	225
	155	819	Ø 260	213T	225
				184T	225
				182T	225
22	210	1020	Ø 354	326T	345
				286T	280
		990	Ø 300	215T	225
				213T	225
				184T	225

E4B...K...NEMA					
				Motor	
	Ø D_{max} **	g_1	z_1	NEMA	Ø BD
25	210	1078	Ø 354	326T	345
				286T	280
		1048	Ø 300	215T	225
				213T	225
				184T	225
26 28	250	1183	Ø 494	405T	395
	210	1153	Ø 354	326T	345
				286T	280
		1123	Ø 300	215T	225
31	250	1183	Ø 494	405T	395
	210	1153	Ø 354	326T	345
				286T	280
		1123	Ø 300	215T	225

**** Maximum diameter of coupling**

For more information please contact the Dana area contact person.

TUNNEL BELL HOUSING WITH INTEGRATED FAN

E3B...K...IEC

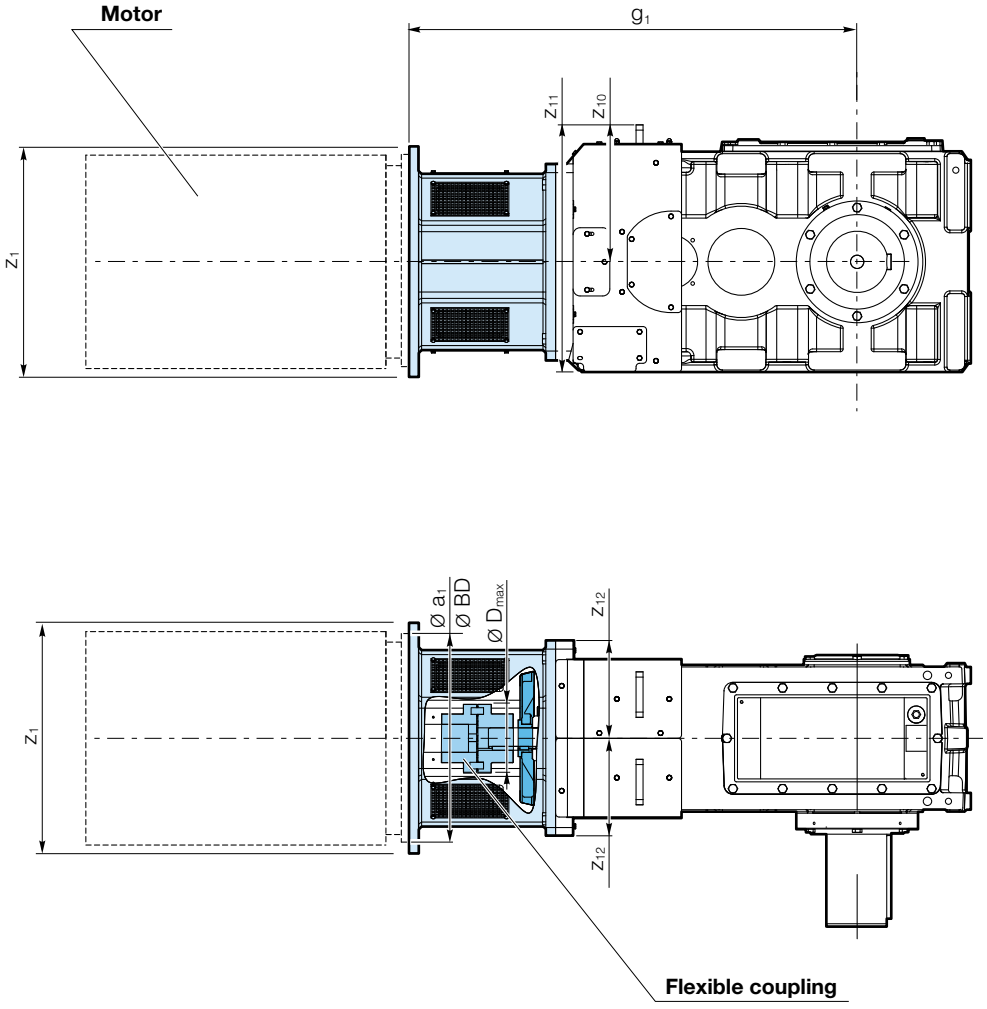

Appropriate flexible coupling is part of Dana supply.

For tunnel bell housings with an integrated fan, please refer to the calculation method presented on page 25.

E3B...K...IEC

E3B...K...IEC									
	Position of gear case						Motor		
	z_{10}	z_{11}	z_{12}	Ø D_{max}**	g_1	z_1	IEC	Ø a_1
18	312.5	625	312.5	182	845	Ø 650	280 S	550
							250 M	
							225 M/S	450
	266.5	491.5	225		815	Ø 500	200 L	400
							180 L/M	350
							160 L/M	
19	312.5	625	312.5	182	876	Ø 550	280 S	550
							250 M	
							225 M/S	450
	278.5	503.5	225		846	Ø 500	200 L	400
	266.5	491.5					180 L/M	350
							160 L/M	
20	312.5	625	312.5	182	899	Ø 650	280 S	550
							250 M	
							225 M/S	450
	278.5	503.5	225		869	Ø 500	200 L	400
	301.5	531					180 L/M	350
							160 L/M	
22	311.5	591.5	280	250	1080	Ø 660	315 M/S	660
		616.5	305		1050	Ø 650	280 M/S	550
							250 M	
							225 M/S	450
25	341.5	621.5	280	250	1138	Ø 660	315 M/S	660
		646.5	305		1108	Ø 650	280 M/S	550
							250 M	
							225 M/S	450
26 28	356.5	644	280	250	1213	Ø 660	315 M/S	660
		661.5	305		1183	Ø 650	280 M/S	550
							250 M	
							225 M/S	450
31	391.5	706.5	280	250	1281	Ø 660	315 M/S	660
			305		1251	Ø 650	280 M/S	550
							250 M	

E3B...K...IEC										
	Position of gear case								Motor	
	z_{10} Housing Type		z_{11} Housing Type		z_{12}	Ø D_{max}**	g_1	z_1	IEC	Ø a_1
	R11	R12	R11	R12						
35	377	347	677	647	290	360	1487	Ø 660	315 M/S	660
			682		305		1457	Ø 650	280 M/S	550
36	407	347	737	677	290	360	1517	Ø 660	315 M/S	660
					305		1487	Ø 650	280 M/S	550
40	452	347	827	722	290	360	1564	Ø 660	315 M/S	660
					305		1534	Ø 650	280 M/S	550
42	432	372.5	787	727.5	298	360	1710	Ø 660	315 M/S	660
					305		1680	Ø 650	280 M/S	550
43	469	372.5	861	764.5	298	360	1747	Ø 660	315 M/S	660
					305		1717	Ø 650	280 M/S	550
45	502	372.5	927	797.5	298	360	1776	Ø 660	315 M/S	660
					305		1746	Ø 650	280 M/S	550
47	577	372.5	1077	872.5	298	360	1862	Ø 660	315 M/S	660
					305		1832	Ø 650	280 M/S	550

**** Maximum diameter of coupling**

For more information please contact the Dana area contact person.

TUNNEL BELL HOUSING WITH INTEGRATED FAN

E3B...K...NEMA

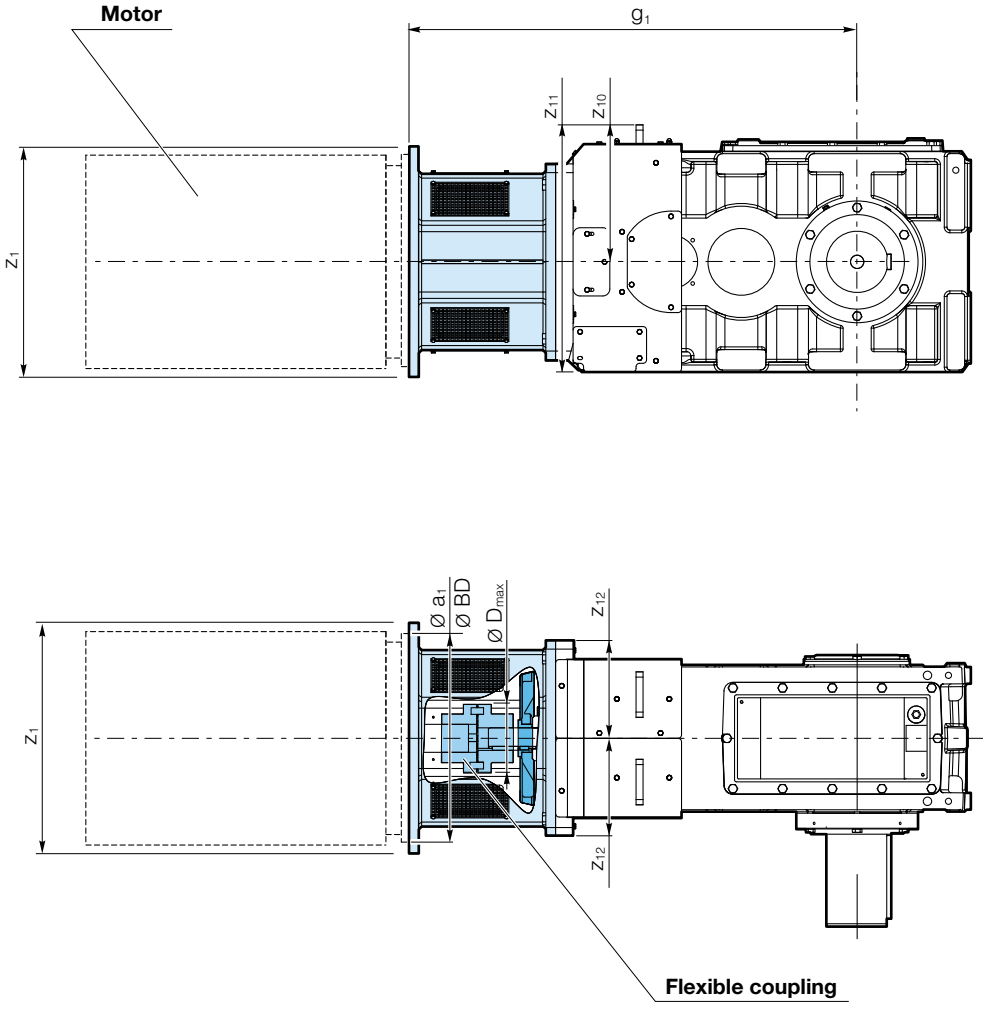

Appropriate flexible coupling is part of Dana supply.

For tunnel bell housings with an integrated fan, please refer to the calculation method presented on page 25.

E3B...K...NEMA

E4B...K...NEMA					
				Motor	
	Ø D_{max} **	g_1	z_1	NEMA	Ø BD
18	182	845	Ø 650	444T	455
				405T	395
				326T	345
		815	Ø 500	286T	280
				215T	225
19	182	876	Ø 650	444T	455
				405T	395
				326T	345
		846	Ø 500	286T	280
				215T	225
20	182	899	Ø 650	444T	455
				405T	395
				326T	345
		869	Ø 500	286T	280
				215T	225
22	250	1080	Ø 660	447T	455
				445T	
		1050	Ø 650	444T	
				405T	395
				326T	345
		935	-	286T	280
25	250	1138	Ø 660	447T	455
				445T	
		1108	Ø 650	444T	
				405T	395
				326T	345
		935	-	286T	280
26 28	250	1213	Ø 660	447T	455
				445T	
		1183	Ø 650	444T	
				405T	395
				326T	345
31	250	1281	Ø 660	447T	455
				445T	
		1251	Ø 650	444T	
				405T	395
				326T	345

E4B...K...NEMA					
				Motor	
	Ø D_{max} **	g_1	z_1	NEMA	Ø BD
35	360	1487	Ø 660	447T	455
				445T	
		1457	Ø 650	444T	
				405T	395
36	360	1517	Ø 660	447T	455
				445T	
		1487	Ø 650	444T	
				405T	395
40	360	1564	Ø 660	447T	455
				445T	
		1534	Ø 650	444T	
				405T	395
42	360	1710	Ø 660	447T	455
				445T	
		1680	Ø 650	444T	
43	360	1747	Ø 660	447T	455
				445T	
		1717	Ø 650	444T	
45	360	1776	Ø 660	447T	455
				445T	
		1746	Ø 650	444T	
47	360	1862	Ø 660	447T	455
				445T	
		1832	Ø 650	444T	

**** Maximum diameter of coupling**

For more information please contact the Dana area contact person.

HOLLOW SHAFT WITH KEYWAY

H

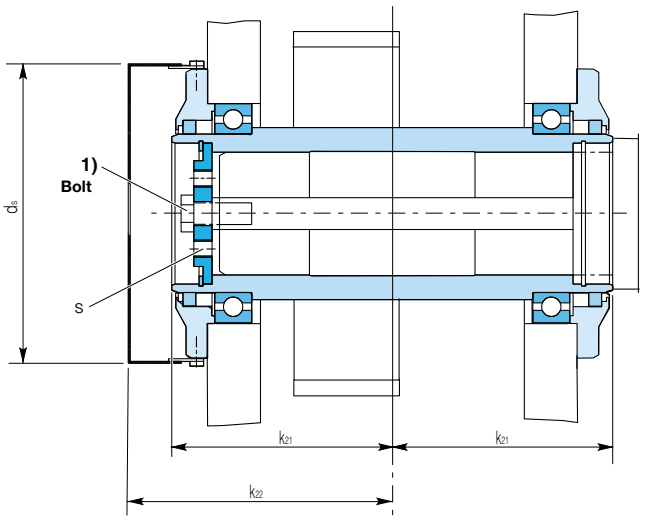

Design of hollow shaft

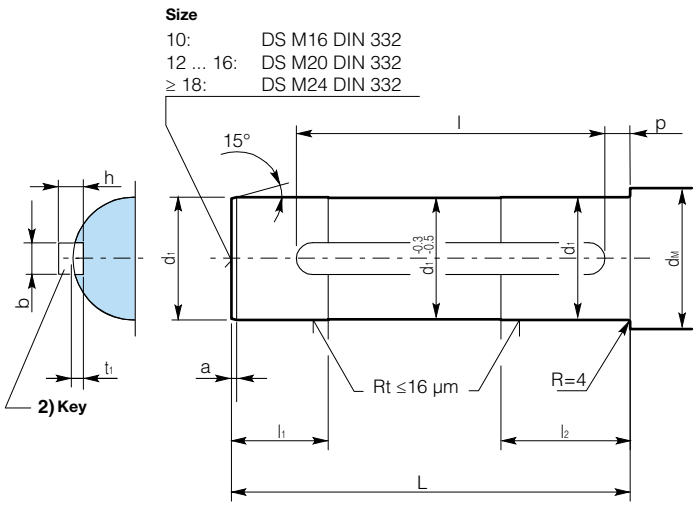

Design of machine shaft

		a	Ø d_1	Ø d_M min	Ø d_s	k_{21}	k_{22}	l_1	l_2	L	l_{min}	p	t_1	s	Bolt [1] ISO4014	Key [2] b x h
E2H - E3H - E4H E3B - E4B E3C - E4C	18	5	90 h6	107	230	157	173	70	95	279	250	18	6.2	M 12	M 24 x 60	25 x 9
	19	5	90 h6	107	230	157	173	70	95	279	250	18	6.2	M12	M 24 x 60	25 x 9
	20	5	100 h6	120	285	157	173	80	109	276	220	24	10	M 16	M 24 x 65	28 x 16
	22	5	110 h6	128	285	189	205	90	119	340	280	24	10	M 16	M 24 x 65	28 x 16
	25	6	130 h6	150	310	215	250	100	132	388	280	26	11	M 20	M 24 x 70	32 x 18
	26	6	130 h6	150	310	246	285	100	132	450	320	26	11	M 20	M 24 x 70	32 x 18
	28	6	140 h6	160	340	250	300	110	147	453	320	29	12	M 20	M 24 x 70	36 x 20
	31	6	160 h6	180	365	250	300	125	162	453	320	27	13	M 20	M 24 x 70	40 x 22
E2H - E3H - E4H E3B - E4B	35	6	170 h6	190	380	285	320	135	180	515	400	35	13	M 20	M 24 x 70	40 x 22
	36	6	190 h6	210	410	285	320	150	195	515	400	32	15	M 20	M 24 x 70	45 x 25
	40	6	190 h6	210	410	285	320	150	195	515	400	32	15	M 20	M 24 x 70	45 x 25
	42	6	200 h6	220	470	315	360	160	215	565	400	40	15	M 20	M 24 x 70	45 x 25
	43	6	220 h6	240	495	320	360	175	225	578	400	34	17	M 20	M 24 x 70	50 x 28
	45	6	220 h6	240	495	320	360	175	225	578	400	34	17	M 20	M 24 x 70	50 x 28
	47	6	235 h6	255	540	330	355	190	235	603	400	26	20	M 20	M 24 x 70	56 x 32
	48	6	235 h6	255	540	385	410	190	235	713	400	26	20	M20	M 24 x 70	56 x 32
	50	6	250 h6	270	570	390	425	205	250	723	400	26	20	M 20	M 24 x 70	56 x 32
	53	6	270 h6	290	615	390	600	220	275	715	400	25	20	M 20	M 24 x 70	63 x 32
	56	6	290 h6	310	615	390	600	235	290	715	400	25	20	M 20	M 24 x 70	63 x 32

[1] Key of machine shaft and secured bolt are not in scope of delivery.
[2] Type of tolerance of the keyway width in the hollow shaft: P9.

H - Labyrinth

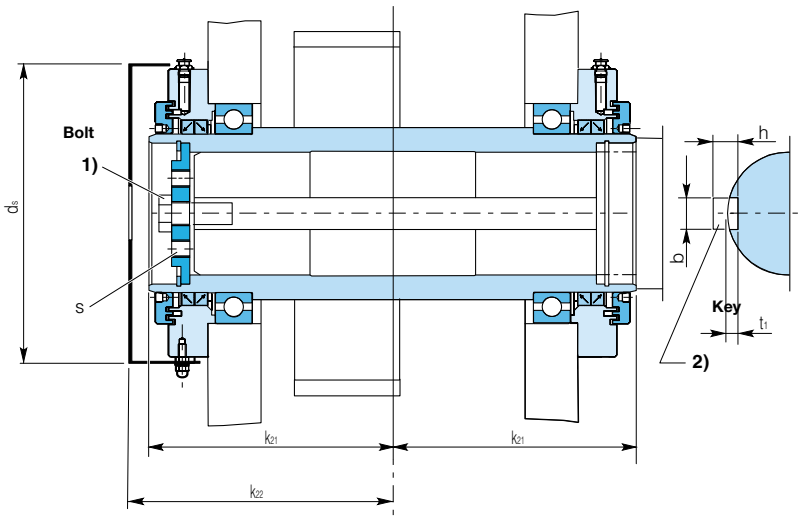

Design of hollow shaft

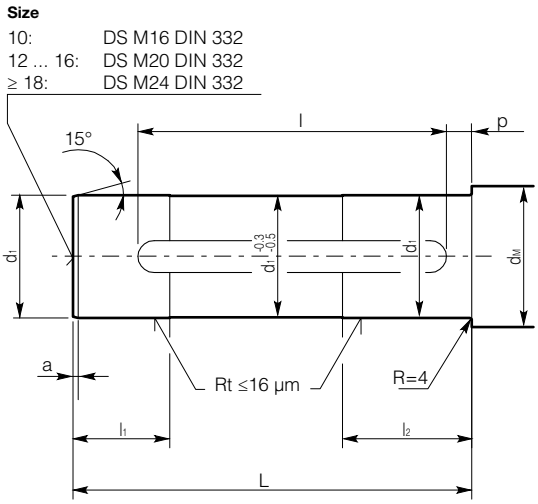

Design of machine shaft

		a	Ø d_1	Ø d_M min	Ø d_s	k_{21}	k_{22}	l_1	l_2	L	l_{min}	p	t_1	s	Bolt 1) ISO4014	Key 2) b x h
E2H - E3H - E4H E3B - E4B E3C - E4C	18	5	90 h6	107	200	206	280	85	110	378	250	18	6.2	M 12	M 24 x 60	25 x 9
	19	5	90 h6	107	200	206	280	85	110	378	250	18	6.2	M 12	M 24 x 60	25 x 9
	20	5	100 h6	120	250	205	285	80	110	372	220	24	10	M 16	M 24 x 65	28 x 16
	22	5	110 h6	128	310	240	335	90	120	442	280	24	10	M 16	M 24 x 65	28 x 16
	25	6	130 h6	150	310	235	250	100	132	428	280	26	11	M 20	M 24 x 70	32 x 18
	26	6	130 h6	150	310	266	280	100	132	490	320	26	11	M 20	M 24 x 70	32 x 18
	28	6	140 h6	160	340	280	315	110	148	513	320	29	12	M 20	M 24 x 70	36 x 20
	31	6	160 h6	180	365	280	315	125	162	513	320	27	13	M 20	M 24 x 70	40 x 22
E2H - E3H - E4H E3B - E4B	35	6	170 h6	190	380	305	335	135	180	555	400	35	13	M 20	M 24 x 70	40 x 22
	36	6	190 h6	210	410	305	345	150	195	555	400	32	15	M 20	M24 x 70	45 x 25
	40	6	190 h6	210	410	305	345	150	195	555	400	32	15	M 20	M 24 x 70	45 x 25
	42	6	200 h6	220	470	315	352	160	215	565	400	40	15	M 20	M 24 x 70	45 x 25
	43	6	220 h6	240	495	335	385	175	225	607	400	34	17	M 20	M24 x 70	50 x 28
	45	6	220 h6	240	495	335	385	175	225	607	400	34	17	M 20	M 24 x 70	50 x 28
	47	6	235 h6	255	540	355	375	190	235	652	400	26	20	M 20	M 24 x 70	56 x 32
	48	6	235 h6	255	540	410	430	215	270	762	400	26	20	M20	M 24 x 70	56 x 32
	50	6	250 h6	270	570	390	425	205	250	723	400	26	20	M 20	M 24 x 70	56 x 32
	53	6	270 h6	290	615	390	600	220	275	715	400	25	20	M 20	M 24 x 70	63 x 32
	56	6	290 h6	310	615	390	600	235	290	715	400	25	20	M 20	M 24 x 70	63 x 32

1) Key of machine shaft and secured bolt are not in scope of delivery.
2) Type of tolerance of the keyway width in the hollow shaft: P9.

HS

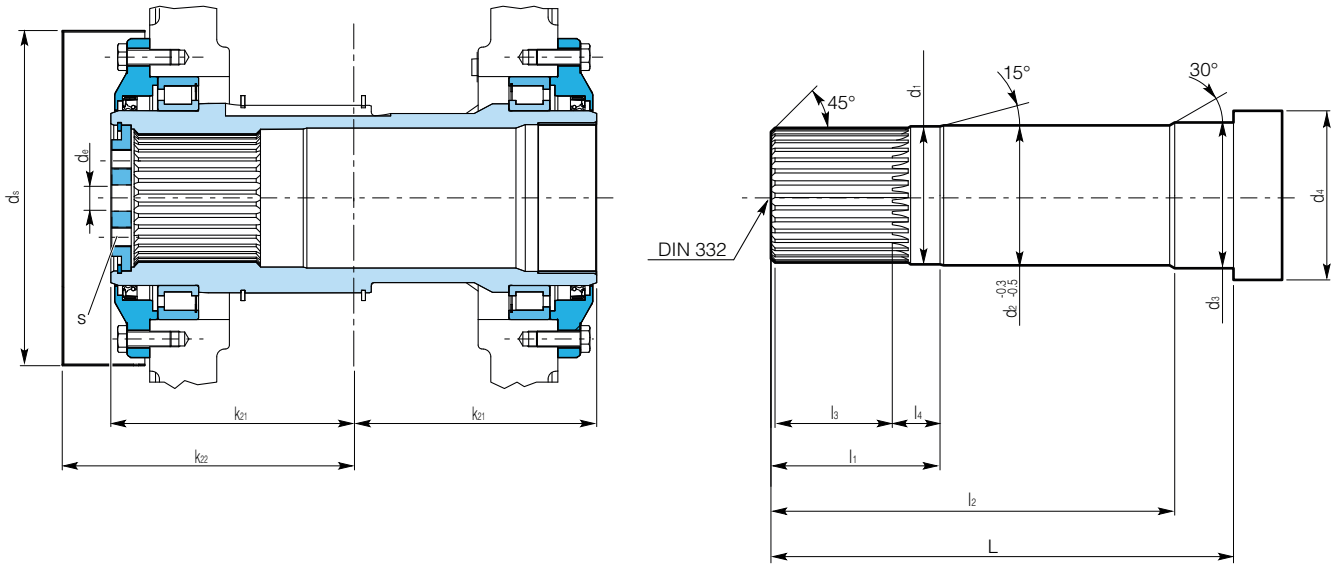

		Spline shaft DIN 5480	k_{21}	k_{22}	L	l_1	l_2	l_3	l_4	Ø d_1	Ø d_2	Ø d_3	Ø d_4	Ø d_e	Ø d_s	s	DIN 332
E2H - E3H - E4H E3B - E4B E3C - E4C	18	N88x2.5x30x34x9H W88x2.5x30x34x8f	157	173	296	132	235.5	85	44	88k6	90	90f6	108	25	230	M 12	DS M24
	19	N88x2.5x30x34x9H W88x2.5x30x34x8f	157	173	296	132	235.5	85	44	88k6	90	90f6	108	25	230	M 12	DS M24
	20	N98x2.5x30x38x9H W98x2.5x30x38x8f	157	173	292	132	231.5	85	44	98k6	100	105f6	128	27	285	M 16	DS M24
	22	N105x3x30x34x9H W105x3x30x34x8f	189	205	355	157	304.5	104	49	105k6	109	115f6	138	27	285	M 16	DS M24
	25	N130x4x30x31x9H W130x4x30x31x8f	215	250	406	157	345.5	104	49	130k6	132	135f6	164	27	310	M 20	DS M24
	26	N130x4x30x31x9H W130x4x30x31x8f	246	285	468	157	403	104	49	130k6	132	135f6	164	27	310	M 20	DS M24
	28	N140x4x30x34x9H W140x4x30x34x8f	250	300	476	178	415.5	124	49	140k6	142	150f6	174	33	340	M 20	DS M24
	31	N160x4x30x38x9H W160x4x30x38x8f	250	300	476	178	375.5	124	49	160k6	162	170f6	194	33	365	M 20	DS M24
E2H - E3H - E4H E3B - E4B	35	N180x4x30x44x9H W180x4x30x44x8f	285	320	539	220	434	160	55	180 k6	180	180 f6	194	27	380	M20	DS M24
	36	N200x5x30x38x9H W200x5x30x38x8f	285	320	539	227	434	160	62	200 k6	200	200 f6	234	27	410	M20	DS M24
	40	N200x5x30x38x9H W200x5x30x38x8f	285	320	539	227	434	160	62	200 k6	200	200 f6	234	27	410	M20	DS M24
	42	N220x6x30x35x9H W220x6x30x35x8f	315	360	597	250	487	180	65	220 k6	220	220 f6	254	33	470	M20	DS M24
	43	N240x6x30x38x9H W240x6x30x38x8f	320	360	607	250	492	180	65	240 k6	240	240 f6	274	33	495	M20	DS M24
	45	N240x6x30x38x9H W240x6x30x38x8f	320	360	607	250	492	180	65	240 k6	240	240 f6	274	33	495	M20	DS M24
	47	N240x6x30x38x9H W240x6x30x38x8f	330	355	624	290	504	220	65	240 k6	242	250 f6	294	33	540	M20	DS M24
	48	N240x6x30x38x9H W240x6x30x38x8f	385	410	734	310	614	240	65	240 k6	242	250 f6	294	33	540	M20	DS M24
	50	N260x8x30x31x9H W260x8x30x31x8f	390	425	745	372	625	260	107	260 k6	262	270 f6	314	33	570	M20	DS M24
	53	N260x8x30x31x9H W260x8x30x31x8f	390	600	745	392	620	280	107	260 k6	262	280 f6	334	33	615	M20	DS M24
	56	N300x8x30x36x9H W300x8x30x36x8f	390	600	744	395	614	280	110	300 k6	300	300 f6	354	33	615	M20	DS M24

HS- Labyrinth

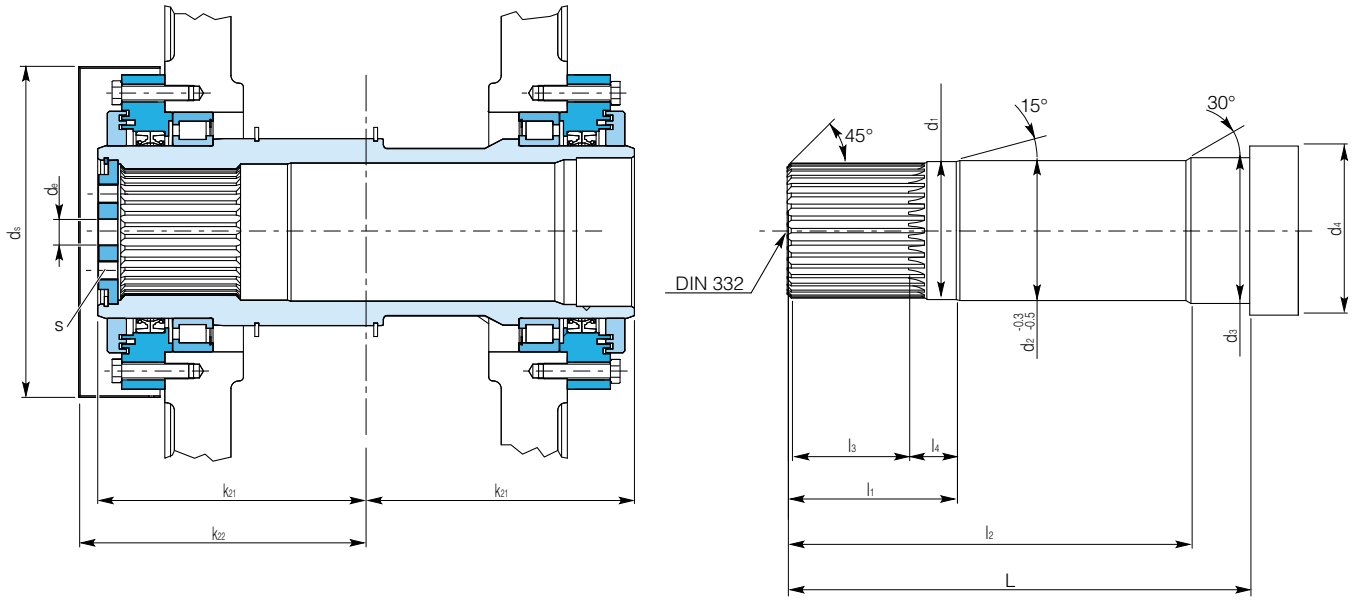

		Spline shaft DIN 5480	k_{21}	k_{22}	L	l_1	l_2	l_3	l_4	Ø d_1	Ø d_2	Ø d_3	Ø d_4	Ø d_e	Ø d_s	s	DIN 332
E2H - E3H - E4H E3B - E4B E3C - E4C	18	N88x2.5x30x34x9H W88x2.5x30x34x8f	206	173	394	132	333.5	85	44	88k6	90	90f6	108	25	200	M 12	DS M24
	19	N88x2.5x30x34x9H W88x2.5x30x34x8f	206	173	394	132	333.5	85	44	88k6	90	90f6	108	25	200	M 12	DS M24
	20	N98x2.5x30x38x9H W98x2.5x30x38x8f	205	173	388	132	327.5	85	44	98k6	100	105f6	128	27	250	M 16	DS M24
	22	N105x3x30x34x9H W105x3x30x34x8f	240	205	457	157	406.5	104	49	105k6	109	115f6	138	27	310	M 16	DS M24
	25	N130x4x30x31x9H W130x4x30x31x8f	235	250	446	157	385.5	104	49	130k6	132	135f6	164	27	310	M 20	DS M24
	26	N130x4x30x31x9H W130x4x30x31x8f	266	285	508	157	443	104	49	130k6	132	135f6	164	27	310	M 20	DS M24
	28	N140x4x30x34x9H W140x4x30x34x8f	280	300	536	178	475.5	124	49	140k6	142	150f6	174	33	340	M 20	DS M24
	31	N160x4x30x38x9H W160x4x30x38x8f	280	300	536	178	435.5	124	49	160k6	162	170f6	194	33	365	M 20	DS M24
E2H - E3H - E4H E3B - E4B	35	N180x4x30x44x9H W180x4x30x44x8f	305	335	579	220	474	160	55	180 k6	180	180 f6	194	27	380	M20	DS M24
	36	N200x5x30x38x9H W200x5x30x38x8f	305	345	579	227	474	160	62	200 k6	200	200 f6	234	27	410	M20	DS M24
	40	N200x5x30x38x9H W200x5x30x38x8f	305	345	579	227	474	160	62	200 k6	200	200 f6	234	27	410	M20	DS M24
	42	N220x6x30x35x9H W220x6x30x35x8f	315	352	597	250	487	180	65	220 k6	220	220 f6	254	33	470	M20	DS M24
	43	N240x6x30x38x9H W240x6x30x38x8f	335	385	637	250	522	180	65	240 k6	240	240 f6	274	33	495	M20	DS M24
	45	N240x6x30x38x9H W240x6x30x38x8f	335	385	637	250	522	180	65	240 k6	240	240 f6	274	33	495	M20	DS M24
	47	N240x6x30x38x9H W240x6x30x38x8f	355	375	674	290	554	220	65	240 k6	242	250 f6	294	33	540	M20	DS M24
	48	N240x6x30x38x9H W240x6x30x38x8f	410	375	784	310	664	240	65	240 k6	242	250 f6	294	33	540	M20	DS M24
	50	N260x8x30x31x9H W260x8x30x31x8f	390	425	745	372	625	260	107	260 k6	262	270 f6	314	33	570	M20	DS M24
	53	N260x8x30x31x9H W260x8x30x31x8f	390	600	745	392	620	280	107	260 k6	262	280 f6	334	33	615	M20	DS M24
	56	N300x8x30x36x9H W300x8x30x36x8f	390	600	744	395	614	280	110	300 k6	300	300 f6	354	33	615	M20	DS M24

HOLLOW SHAFT WITH SHRINK DISC

G

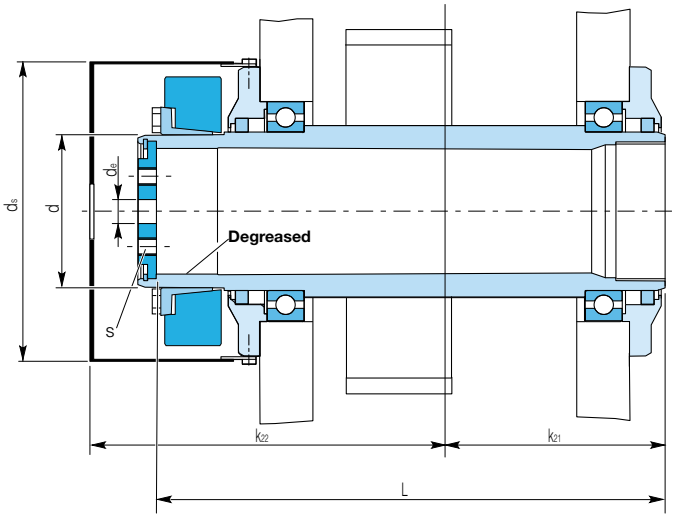

Mounting of shrink disc

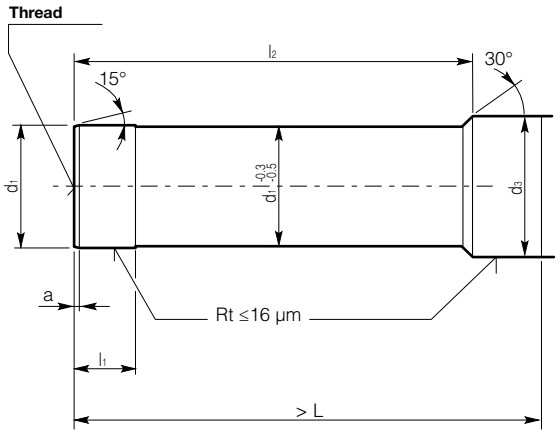

Design of machine shaft

Instructions for assembling and replacing the shrink disc are in scope of delivery.

		Hollow shaft							Machine shaft				
		Ø d_s	k_{21}	k_{22}	Ø d	Ø d_e	s	L	a	Ø d_1	Ø d_3	l_1	l_2
E2H - E3H - E4H E3B - E4B E3C - E4C	18	200	157	231	110	25	M 12	367	5	90 h6	90 f6	50	325
	19	200	157	231	110	25	M 12	367	5	90 h6	90 f6	50	325
	20	250	157	247	130	27	M 16	371	5	100 h6	105 f6	54	324
	22	250	189	279	140	27	M 16	443	5	110 h6	115 f6	58	392
	25	315	215	340	170	27	M 20	504	6	130 h6	135 f6	70	442
	26	315	246	370	170	27	M 20	566	6	130 h6	135 f6	70	504
	28	345	250	360	180	33	M 20	576	6	140 h6	150 f6	70	514
	31	365	250	375	200	33	M 20	594	6	160 h6	170 f6	85	517
E2H - E3H - E4H E3B - E4B	35	385	285	430	220	33	M 20	677	6	170 g6	180 f6	104	581
	36	420	285	435	240	33	M 20	682	6	190 g6	200 f6	108	582
	40	420	285	435	240	33	M 20	682	6	190 g6	200 f6	108	582
	42	470	315	475	260	33	M 20	750	6	210 g6	220 f6	119	639
	43	500	320	485	280	33	M 20	763	6	230 g6	240 f6	130	641
	45	500	320	485	280	33	M 20	763	6	230 g6	240 f6	130	641
	47	540	330	515	300	33	M 20	800	6	245 g6	250 f6	138	670
	48	540	385	570	300	33	M20	910	6	245 g6	250 f6	138	780
	50	555	390	574	320	33	M 20	918	6	260 g6	270 f6	138	788
	53	615	390	600	340	33	M 20	933	6	270 g6	280 f6	152	789
	56	615	390	600	360	33	M 20	939	6	290 g6	300 f6	158	789

G - Labyrinth

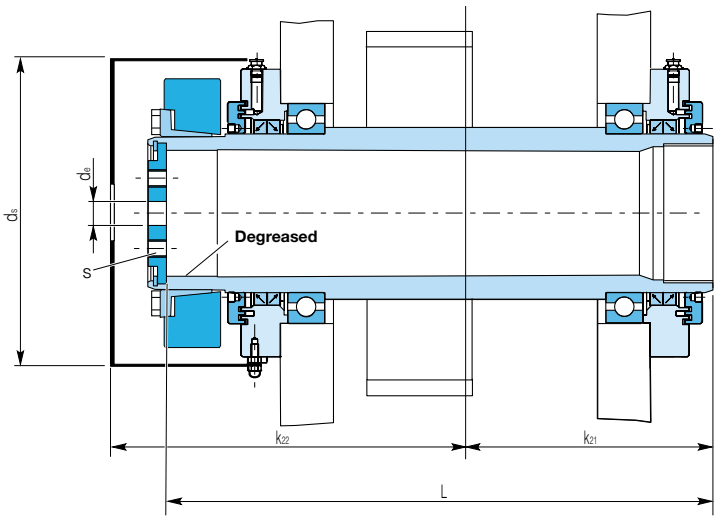

Mounting of shrink disc

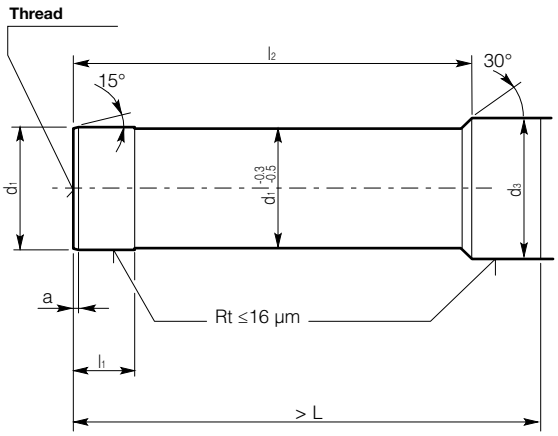

Design of machine shaft

Instructions for assembling and replacing the shrink disc are in scope of delivery.

		Hollow shaft						Machine shaft				
		Ø d_s	k_{21}	k_{22}	Ø d_e	s	L	a	Ø d_1	Ø d_3	l_1	l_2
E2H - E3H - E4H E3B - E4B E3C - E4C	18	200	206	280	25	M 12	463	5	90 h6	90 f6	50	420
	19	200	206	280	25	M 12	463	5	90 h6	90 f6	50	420
	20	250	205	285	27	M 16	464	5	100 h6	105 f6	55	417
	22	250	240	335	27	M 16	546	5	110 h6	115 f6	60	495
	25	315	235	340	27	M 20	544	6	130 h6	135 f6	70	482
	26	315	266	370	27	M 20	606	6	130 h6	135 f6	70	544
	28	345	280	380	33	M 20	629	6	140 h6	150 f6	70	567
	31	365	280	390	33	M 20	640	6	160 h6	170 f6	85	565
E2H - E3H - E4H E3B - E4B	35	385	305	445	33	M 20	710	6	170 g6	180 f6	105	615
	36	420	305	460	33	M20	722	6	190 g6	200 f6	110	622
	40	420	305	460	33	M 20	722	6	190 g6	200 f6	110	622
	42	470	315	475	33	M 20	750	6	210 g6	220 f6	120	639
	43	500	335	505	33	M20	800	6	230 g6	240 f6	130	678
	45	500	335	505	33	M 20	800	6	230 g6	240 f6	130	678
	47	540	355	540	33	M 20	847	6	245 g6	250 f6	140	717
	48	540	410	594	33	M20	957	6	245 g6	250 f6	140	827
	50	555	390	574	33	M 20	918	6	260 g6	270 f6	140	788
	53	615	390	600	33	M 20	933	6	270 g6	280 f6	155	788
	56	615	390	600	33	M 20	939	6	290 g6	300 f6	160	789

VS

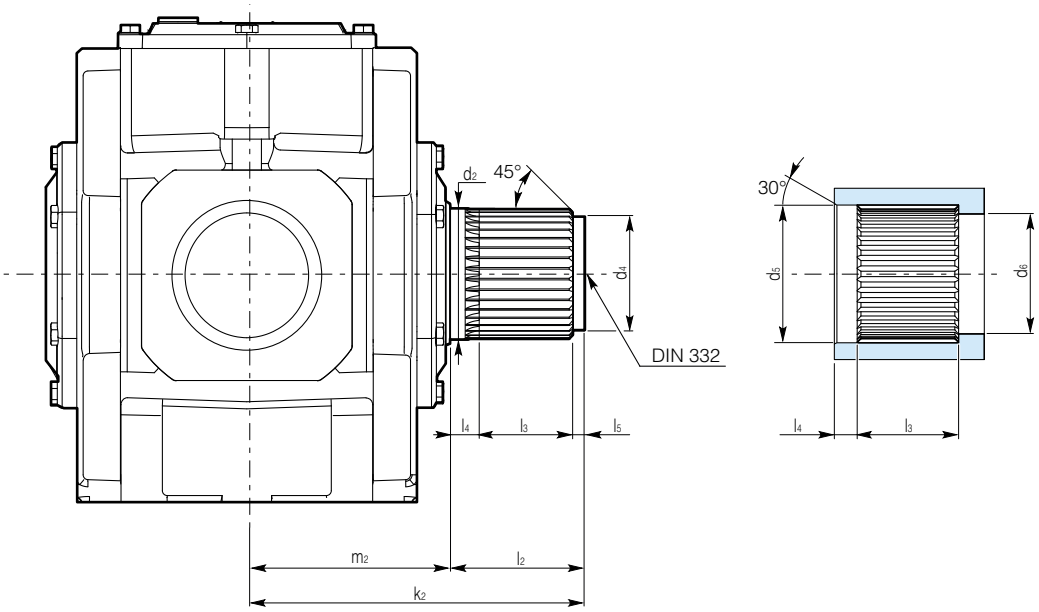

		Spline shaft DIN 5480	m_2	l_2	k_2	Ø d_2	Ø d_4	Ø d_5	Ø d_6	l_3	l_4	l_5	DIN 332
E2H - E3H - E4H E3B - E4B E3C - E4C	18	W95x2.5x30x36x8f N95x2.5x30x36x9H	180	145	325	95k6	80k6	95H7	80H7	85	45	15	DS M24
	19	W95x2.5x30x36x8f N95x2.5x30x36x9H	180	145	325	95k6	80k6	95H7	80H7	85	45	15	DS M24
	20	W120x3x30x38x8f N120x3x30x38x9H	180	155	335	120k6	105k6	120H7	105H7	86	54	15	DS M24
	22	W130x4x30x31x8f N130x4x30x31x9H	215	155	370	130k6	115k6	130H7	115H7	85	55	15	DS M24
	25	W140x4x30x34x8f N140x4x30x34x9H	220	160	380	140k6	125k6	140H7	125H7	85	60	15	DS M24
	26	W140x4x30x34x8f N140x4x30x34x9H	250	160	410	140k6	125k6	140H7	125H7	85	60	15	DS M24
	28	W160x4x30x38x8f N160x4x30x38x9H	250	185	435	160k6	140k6	160H7	140H7	114	56	15	DSM24
	31	W170x5x30x32x8f N170x5x30x32x9H	250	200	450	170k6	150k6	170H7	150H7	115	70	15	DSM24
E2H - E3H - E4H E3B - E4B	35	W150x4x30x36x8f N150x4x30x36x9H	280	290	570	150k6	130k6	150H7	130H7	215	60	15	DS M24
	36	W170x5x30x32x8f N170x5x30x32x9H	280	290	570	170k6	150k6	170H7	150H7	215	60	15	DS M24
	40	W170x5x30x32x8f N170x5x30x32x9H	280	290	570	170k6	150k6	170H7	150H7	215	60	15	DS M24
	42	W190x5x30x36x8f N190x5x30x36x9H	320	330	650	190k6	170k6	190H7	170H7	245	70	15	DS M24
	43	W190x5x30x36x8f N190x5x30x36x9H	320	330	650	190k6	170k6	190H7	170H7	245	70	15	DS M24
	45	W210x6x30x34x8f N210x6x30x34x9H	320	390	710	210k6	190k6	210H7	190H7	305	70	15	DS M24
	47	W220x6x30x35x8f N220x6x30x35x9H	320	390	710	220k6	200k6	220H7	200H7	305	70	15	DS M24
	48	W220x6x30x35x8f N220x6x30x35x9H	375	390	765	220k6	200k6	220H7	200H7	305	70	15	DS M24
	50	W250x6x30x40x8f N250x6x30x40x9H	385	390	775	250k6	230k6	250H7	230H7	305	70	15	DS M24
	53	W250x6x30x40x8f N250x6x30x40x9H	385	390	775	250k6	230k6	250H7	230H7	305	70	15	DS M24
	56	W260x6x30x42x8f N260x6x30x42x9H	385	440	825	260k6	240k6	260H7	240H7	355	70	15	DS M24

vs - Labyrinth

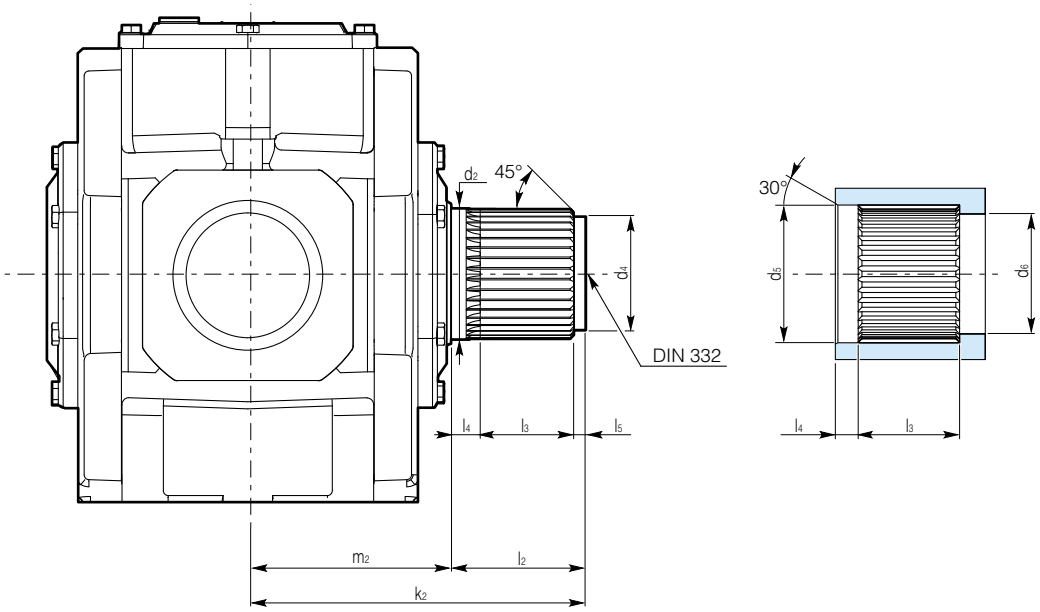

		Spline shaft DIN 5480	m_2	l_2	k_2	Ø d_2	Ø d_4	Ø d_5	Ø d_6	l_3	l_4	l_5	DIN 332
E2H - E3H - E4H E3B - E4B E3C - E4C	18	W95x2.5x30x36x8f N95x2.5x30x36x9H	200	125	325	95k6	80k6	95H7	80H7	85	25	15	DS M24
	19	W95x2.5x30x36x8f N95x2.5x30x36x9H	200	125	325	95k6	80k6	95H7	80H7	85	25	15	DS M24
	20	W120x3x30x38x8f N120x3x30x38x9H	200	135	335	120k6	105k6	120H7	105H7	86	34	15	DS M24
	22	W130x4x30x31x8f N130x4x30x31x9H	235	135	370	130k6	115k6	130H7	115H7	85	35	15	DS M24
	25	W140x4x30x34x8f N140x4x30x34x9H	240	140	380	140k6	125k6	140H7	125H7	85	40	15	DS M24
	26	W140x4x30x34x8f N140x4x30x34x9H	270	140	410	140k6	125k6	140H7	125H7	85	40	15	DS M24
	28	W160x4x30x38x8f N160x4x30x38x9H	270	165	435	160k6	140k6	160H7	140H7	114	36	15	DSM24
	31	W170x5x30x32x8f N170x5x30x32x9H	270	180	450	170k6	150k6	170H7	150H7	115	50	15	DSM24
E2H - E3H - E4H E3B - E4B	35	W150x4x30x36x8f N150x4x30x36x9H	300	270	570	150k6	130k6	150H7	130H7	215	40	15	DS M24
	36	W170x5x30x32x8f N170x5x30x32x9H	300	270	570	170k6	150k6	170H7	150H7	215	40	15	DS M24
	40	W170x5x30x32x8f N170x5x30x32x9H	300	270	570	170k6	150k6	170H7	150H7	215	40	15	DS M24
	42	W190x5x30x36x8f N190x5x30x36x9H	340	310	650	190k6	170k6	190H7	170H7	245	50	15	DS M24
	43	W190x5x30x36x8f N190x5x30x36x9H	340	310	650	190k6	170k6	190H7	170H7	245	50	15	DS M24
	45	W210x6x30x34x8f N210x6x30x34x9H	340	370	710	210k6	190k6	210H7	190H7	305	50	15	DS M24
	47	W220x6x30x35x8f N220x6x30x35x9H	340	370	710	220k6	200k6	220H7	200H7	305	50	15	DS M24
	48	W220x6x30x35x8f N220x6x30x35x9H	395	370	765	220k6	200k6	220H7	200H7	305	50	15	DS M24
	50	W250x6x30x40x8f N250x6x30x40x9H	405	370	775	250k6	230k6	250H7	230H7	305	50	15	DS M24
	53	W250x6x30x40x8f N250x6x30x40x9H	405	370	775	250k6	230k6	250H7	230H7	305	50	15	DS M24
	56	W260x6x30x42x8f N260x6x30x42x9H	405	420	825	260k6	240k6	260H7	240H7	355	50	15	DS M24

F

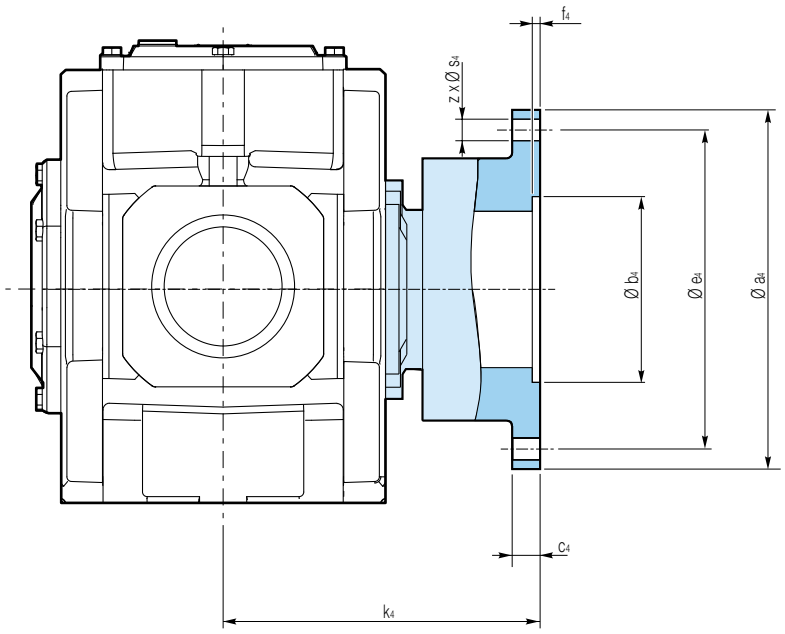

		k_4	a_4	e_4	b_4	f_4	c_4	z	s_4	Bolt [1]
E2H - E3H - E4H E3B - E4B E3C - E4C	**18**	265	360	320	150 H7	10	25	16	22	M20x70
	19	275	380	340	150 H7	10	25	18	22	M20x70
	20	275	360	320	160 H7	10	25	18	22	M20x70
	22	320	370	320	180 H7	10	30	16	26	M24x90
	25	345	390	340	190 H7	10	30	18	26	M24x90
	26	385	405	340	190 H7	10	38	18	26	M24x100
	28	387	470	420	220 H7	12	38	20	26	M24x100
	31	397	500	450	240 H7	12	38	22	26	M24x100
E2H - E3H - E4H E3B - E4B	**35**	442	510	450	260 H7	12	42	18	33	M30x120
	36	**On request.**								
	40									
	42									
	43									
	45									
	47									
	48									
	50									
	53									
	56									

[1] **Minimum bolt property class 8.8 according to ISO 898.**

E2H

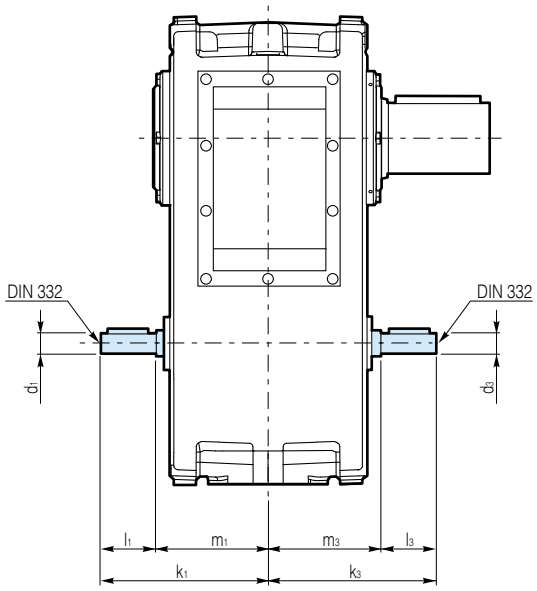

	Input shaft								
	i_N	Ø d_1	k_1	l_1	m_1	Ø d_3	k_3	l_3	m_3
E2H 18	4...14	45 k6	275	120	155	45 k6	275	120	155
	16...18					30 k6	255	100	
E2H 19	5...18	45 k6	275	120	155	45 k6	275	120	155
	20...22.4					30 k6	255	100	
E2H 20	5.6...20	45 k6	275	120	155	45 k6	275	120	155
	22.4...25					30 k6	255	100	
E2H 22	4...14	60 m6	337	140	197	60 m6	337	140	197
	16...18					40 k6	317	120	
E2H 25	5.6...20	60 m6	337	140	197	60 m6	337	140	197
	22.4...25					40 k6	317	120	
E2H 26	4...14	70 m6	369	140	229	70 m6	369	140	229
	16...18					50 k6	349	120	
E2H 28	4...14	70 m6	369	140	229	70 m6	369	140	229
	16...18					50 k6	349	120	
E2H 31	5.6...20	70 m6	369	140	229	70 m6	369	140	229
	22.4...25					50 k6	349	120	
E2H 35	4...14	90 m6	446	180	266	85 m6	446	180	266
	16...18					60 m6	406	140	
E2H 36	4.5...16	90 m6	446	180	266	85 m6	446	180	266
	18...20					60 m6	406	140	
E2H 40	5...18	90 m6	446	180	266	85 m6	446	180	266
	20...22.4					60 m6	406	140	
E2H 42	4...14	100 m6	537	215	322	100 m6	537	215	322
	16...18					80 m6	492	170	
E2H 43	4.5...16	100 m6	537	215	322	100 m6	537	215	322
	18...20					80 m6	492	170	
E2H 45	5...18	100 m6	537	215	322	100 m6	537	215	322
	20...22.4					80 m6	492	170	
E2H 47	6.3...22.4	100 m6	537	215	322	100 m6	537	215	322
	25...28					80 m6	492	170	
E2H 48	4...14	120 m6	600	215	385	120 m6	600	215	385
	16...18					95 m6	565	180	
E2H 50	4...14	120 m6	600	215	385	120 m6	600	215	385
	16...18					95 m6	565	180	
E2H 53	4.5...16	120 m6	600	215	385	120 m6	600	215	385
	18...20					95 m6	565	180	
E2H 56	5.6...20	120 m6	600	215	385	120 m6	600	215	385
	22.4...25					95 m6	565	180	

DOUBLE EXTENDED INPUT SHAFT

E3H

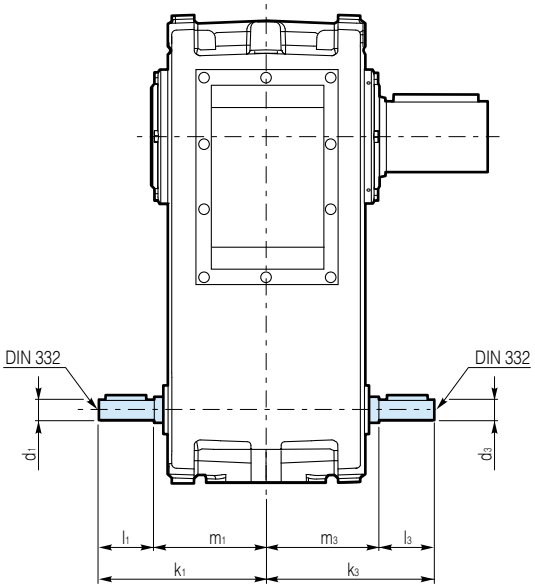

	Input shaft								
	i_N	Ø d_1	k_1	l_1	m_1	Ø d_3	k_3	l_3	m_3
E3H 18	16...45	35 k6	283	100	183	35 k6	283	100	183
	50...100	30 k6				30 k6			
E3H 19	20...56	35 k6	283	100	183	35 k6	283	100	183
	63...125	30 k6				30 k6			
E3H 20	22.4...63	35 k6	283	100	183	35 k6	283	100	183
	71...140	30 k6				30 k6			
E3H 22	20..45	50 k6	347	120	227	50 k6	320	120	200
	50...71	40 k6				40 k6			
E3H 25	25...56	50 k6	347	120	227	50 k6	320	120	200
	63...90	40 k6				40 k6			
E3H 26	16...45	50 k6	362	120	242	50 k6	362	120	242
	50...100	40 k6				40 k6			
E3H 28	16...45	50 k6	362	120	242	50 k6	362	120	242
	50...100	40 k6				40 k6			
E3H 31	22.4...63	50 k6	362	120	242	50 k6	362	120	242
	71...140	40 k6				40 k6			
E3H 35	16...45	70 m6	435	145	290	70 m6	435	145	290
	50...100	50 k6	415	125		50 k6	415	125	
E3H 36	18...50	70 m6	435	145	290	70 m6	435	145	290
	56...112	50 k6	415	125		50 k6	415	125	
E3H 40	20...56	70 m6	435	145	290	70 m6	435	145	290
	63...125	50 k6	415	125		50 k6	415	125	
E3H 42	16...45	80 m6	508	170	338	80 m6	508	170	338
	50...100	65 m6	483	145		65 m6	483	145	
E3H 43	18...50	80 m6	508	170	338	80 m6	508	170	338
	56...112	65 m6	483	145		65 m6	483	145	
E3H 45	20...56	80 m6	508	170	338	80 m6	508	170	338
	63...125	65 m6	483	145		65 m6	483	145	
E3H 47	25...71	80 m6	508	170	338	80 m6	508	170	338
	80...160	65 m6	483	145		65 m6	483	145	
E3H 48	16...45	100 m6	595	215	380	100 m6	595	215	380
	50...100	100 m6	595	215		75 m6	540	160	
E3H 50	16...45	100 m6	595	215	380	100 m6	595	215	380
	50...100	100 m6	595	215		75 m6	540	160	
E3H 53	20...56	100 m6	595	215	380	100 m6	595	215	380
	63...125	100 m6	595	215		75 m6	540	160	
E3H 56	22.4...63	100 m6	595	215	380	100 m6	595	215	380
	71...140	100 m6	595	215		75 m6	540	160	

E4H

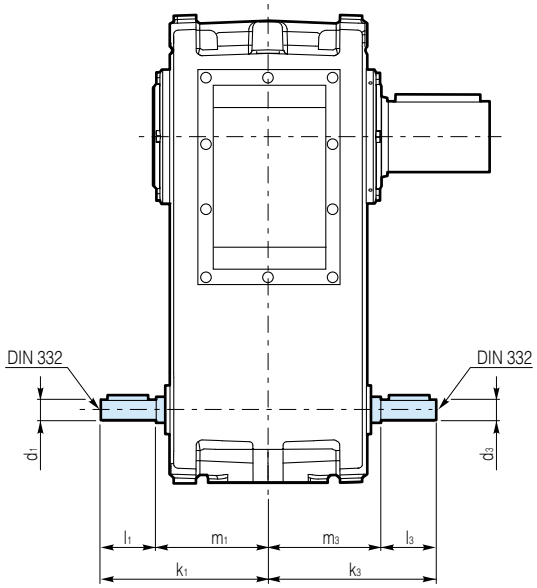

	Input shaft								
	i_N	Ø d_1	k_1	l_1	m_1	Ø d_3	k_3	l_3	m_3
E4H 18	90...315	25 k6	227	72	155	25 k6	227	72	155
E4H 19	112...400								
E4H 20	125...450								
E4H 22	71...200	35 k6	307	100	207	35 k6	307	100	207
	224...450	30 k6				30 k6			
E4H 25	90...250	35 k6	307	100	207	35 k6	307	100	207
	280...560	30 k6				30 k6			
E4H 26	71...450	35 k6	319	100	219	35 k6	319	100	219
E4H 28	71...450								
E4H 31	100...630								
E4H 35	71...200	50 k6	380	120	260	50 k6	380	120	260
	224...450	40 k6				40 k6			
E4H 36	80...224	50 k6	380	120	260	50 k6	380	120	260
	250...500	40 k6				40 k6			
E4H 40	100...280	50 k6	380	120	260	50 k6	380	120	260
	315...630	40 k6				40 k6			
E4H 42	71...450	45 k6	412	107	305	45 k6	412	107	305
E4H 43	80...500								
E4H 45	90...560								
E4H 47	112...710								
E4H 48	71...450	70 m6	510	145	365	70 m6	510	145	365
E4H 50	71...450								
E4H 53	90...560								
E4H 56	100...630								

E3B, E4B, E3C, E4C

E3B, E4B

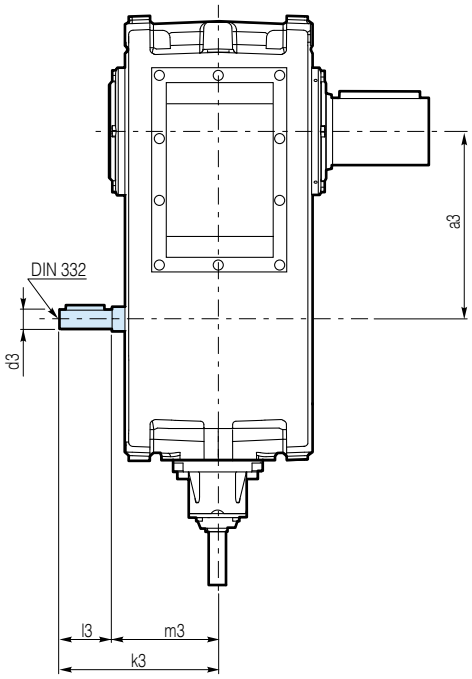

E3C

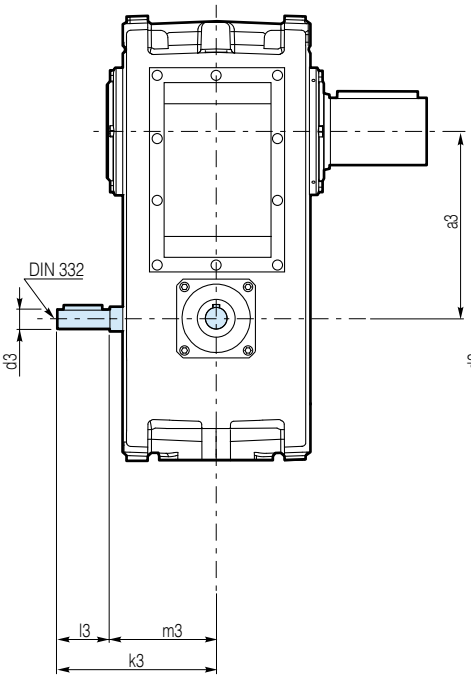

E4C

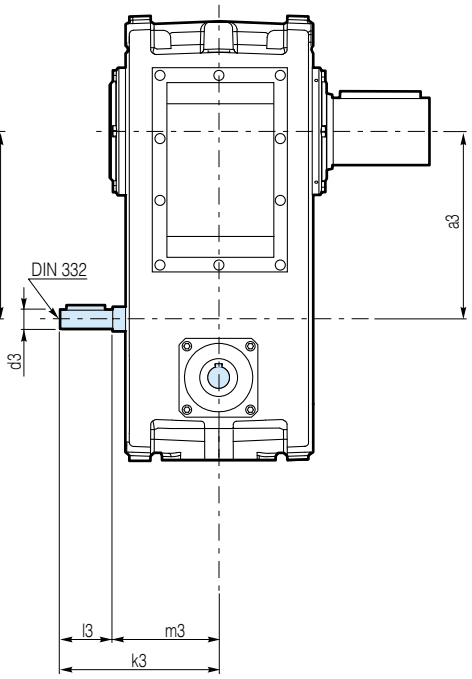

		a_3	Ø d_3	k_3	l_3	m_3
E3B - E4B - E3C - E4C	18	293	45 k6	275	120	155
	19	293	45 k6	275	120	155
	20	347	45 k6	275	120	155
	22	376	60 m6	337	140	197
	25	434	60 m6	337	140	197
	26	464	70 m6	369	140	229
	28	464	70 m6	369	140	229
	31	532	70 m6	369	140	229
E3B - E4B	35	570	90 m6	446	180	266
	36	570	90 m6	446	180	266
	40	647	90 m6	446	180	266
	42	693	100 m6	537	215	322
	43	693	100 m6	537	215	322
	45	759	100 m6	537	215	322
	47	845	100 m6	537	215	322
	48	857	120 m6	600	215	385
	50	857	120 m6	600	215	385
	53	928	120 m6	600	215	385
	56	1021	120 m6	600	215	385

E2H, E3H, E4H, E3B, E4B, E3C, E4C

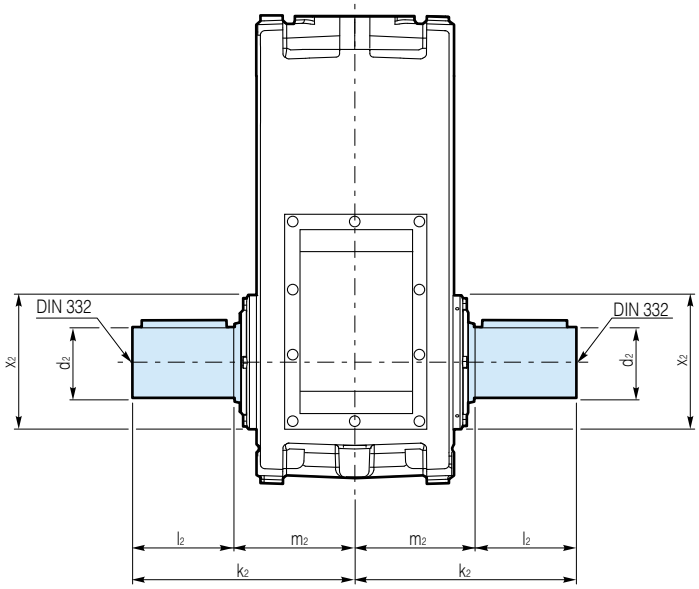

		d_2	k_2	l_2	m_2	Ø x_2
E2H - E3H - E4H E3B - E4B E3C - E4C	**18**	95 m6	350	170	180	–
	19	95 m6	350	170	180	–
	20	120 m6	370	190	180	–
	22	130 m6	405	190	215	–
	25	145 m6	450	230	220	296
	26	145 m6	480	230	250	296
	28	160 m6	480	230	250	328
	31	175 m6	540	290	250	348
E2H - E3H - E4H E3B - E4B	**35**	155 m6	570	290	280	328
	36	175 m6	570	290	280	348
	40	175 m6	570	290	280	348
	42	195 m6	650	330	320	400
	43	195 m6	650	330	320	400
	45	210 m6	730	410	320	440
	47	230 m6	730	410	320	440
	48	235 m6	785	410	375	440
	50	250 m6	795	410	385	480
	53	250 m6	795	410	385	480
	56	270 m6	845	460	385	540

DANA
BREVINI®
Motion Systems

Type	Page
Backstop	292
Torque reaction links	294
Torque reaction arms	295
Motor attachments	296
Fan cooling	297
Electric fan	301
Coolling coils	302
Heater	303
Sealing systems	304
Auxiliary drive	306
Lubrication	308
Attachment of sensors for control of rolling bearing	311
Breather with filter	312
Breather with wet filter	312
Temperature switch	312
Pressure switch	312
P100	313
Manometer	313
Oil level switch	309
Oil drain with ball valve	313
Oil filter, single, double	314
Regulator for quantity of cooling water	314

E2H, E3H, E4H

E2H

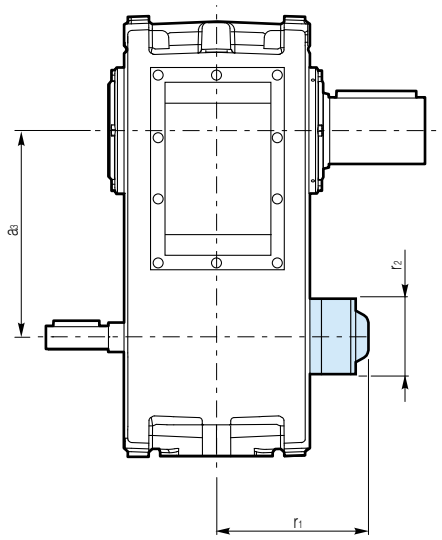

E3H

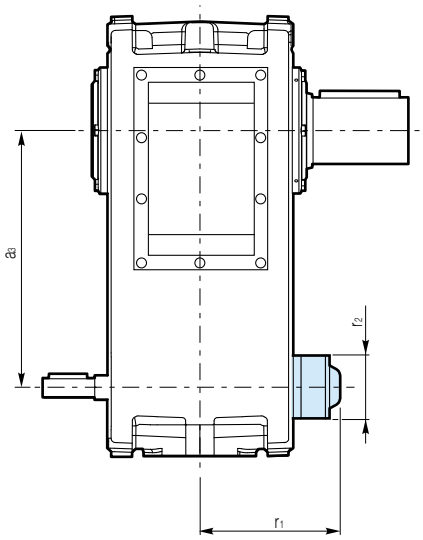

E4H

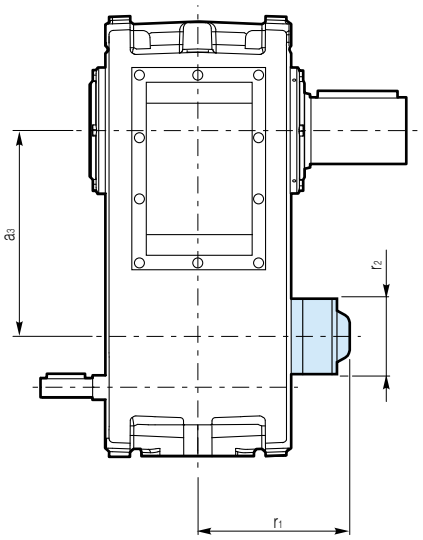

	i_N	r_1	Ø r_2	a_3
E2H 18	4…14	249	190	293
	16…18	219	132	
E2H 19	5.6…20	249	190	324
	22.4…25	219	132	
E2H 20	5.6…20	249	190	347
	22.4…25	219	132	
E2H 22	4…10	296	210	376
	11.2…18	275	175	
E2H 25	5.6…14	296	210	434
	16…25	275	175	
E2H 26	4…5.6	*)	245	464
	6.3…18	322	210	
E2H 28	4…5.6	*)	245	464
	6.3…18	322	210	
E2H 31	5.6…8	*)	245	532
	9…25	322	210	
E2H 35	4...10	*)	290	570
	11.2...14	372	245	
	16...18	344	210	
E2H 36	5...12.5	*)	290	600
	14...18	372	245	
	20...22.4	344	210	
E2H 40	5...12.5	*)	290	647
	14...18	372	245	
	20...22.4	344	210	
E2H 42	*)			693
E2H 43	*)			730
E2H 45	*)			759
E2H 47	*)			845
E2H 48	*)			
E2H 50	*)			
E2H 53	*)			
E2H 56	*)			

	i_N	r_1	Ø r_2	a_3
E3H 18	16…45	247	132	387
	50…100	239	105	
E3H 19	20…56	247	132	418
	63…125	239	105	
E3H 20	22,4…63	247	132	441
	71…140	239	105	
E3H 22	20…45	256	140	492
	50…71	255.5	105	
E3H 25	25…56	256	140	550
	63…90	255.5	105	
E3H 26	16…45	332	190	591
	50…100	300	132	
E3H 28	16…45	332	190	591
	50…100	300	132	
E3H 31	22,4…63	332	190	659
	71…140	300	132	
E3H 35	16...45	347	210	734
	50...100	330	175	
E3H 36	18...50	347	210	764
	56...112	330	175	
E3H 40	20...56	347	210	811
	63...125	330	175	
E3H 42	16...45	404	245	894
	50...100	382	210	
E3H 43	18...50	404	245	931
	56...112	382	210	
E3H 45	20...56	404	245	960
	63...125	382	210	
E3H 47	25...71	404	245	1046
E3H 48	*)			
E3H 50	*)			
E3H 53	*)			
E3H 56	*)			

	r_1	Ø r_2	a_3
E4H 18	218.5	140	293
E4H 19			324
E4H 20			347
E4H 22	275	175	376
E4H 25			434
E4H 26	322	210	464
E4H 28			464
E4H 31			532
E4H 35	372	245	570
E4H 36			600
E4H 40			647
E4H 42	454	290	693
E4H 43			730
E4H 45			759
E4H 47			845
E4H 48	*)		
E4H 50	*)		
E4H 53	*)		
E4H 56	*)		

***) On request**

Directions of rotation and locations of shafts see page 13.

Backstopps have adequate capacities to deal with full rated torque.

E3B, E4B, E3C, E4C

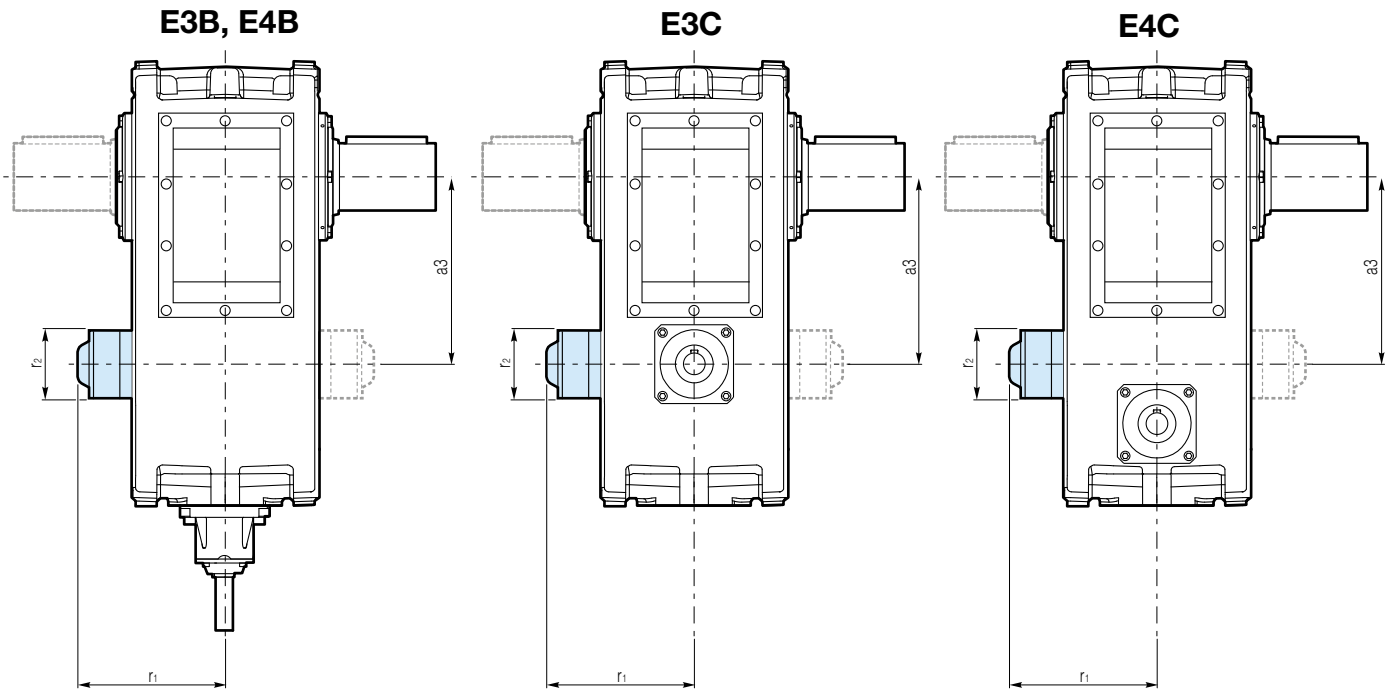

		r_1	Ø r_2	a_3
E3B - E4B - E3C - E4C	18	218.5	140	293
	19			324
	20			347
	22	275	175	376
	25			434
	26	322	210	464
	28			464
	31			532
E3B - E4B	35	372	245	570
	36			600
	40			647
	42	454	290	693
	43			730
	45			759
	47			845
	48	523.5	310	857
	50			857
	53			928
	56			1021

Directions of rotation and locations of shafts see page 16.
Backstops have adequate capacities to deal with full rated torque.

E2H, E3H, E4H, E3B, E4B, E3C, E4C

Torque reaction link

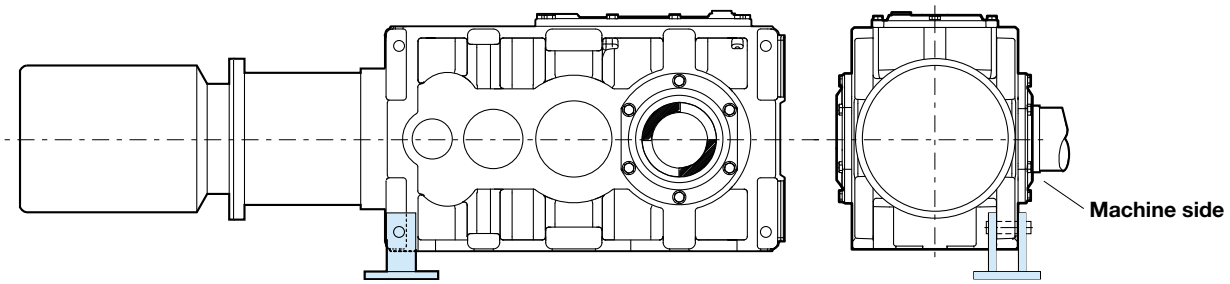

Torque reaction link on driven machine side

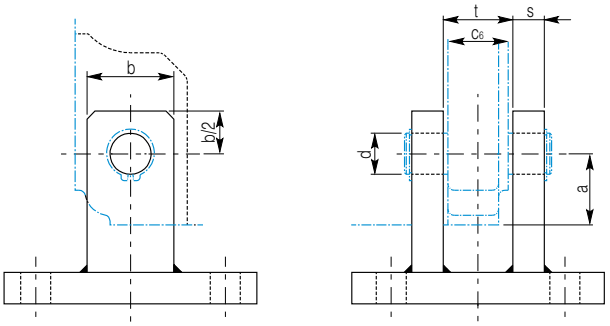

		a	t	c_6	d	b	s
E2H - E3H - E4H E3B - E4B E3C - E4C	18 - 20	35	46	41	Ø 26 H9/h6	45	16
	22 - 25	45	54	49	Ø 30 H9/h6	55	20
	26 - 31	53	59	54	Ø 35 H9/h6	70	25
E2H - E3H - E4H E3B - E4B	35 - 40	50	60	55	Ø45 H9/h6	80	30
	42 - 47	55	66	61	Ø52 H9/h6	110	35
	48 - 56	70	77	72	Ø65 H9/h6	130	45

E2H, E3H, E4H, E3B, E4B, E3C, E4C

Torque reaction arm with 2 ball-and-socket joints

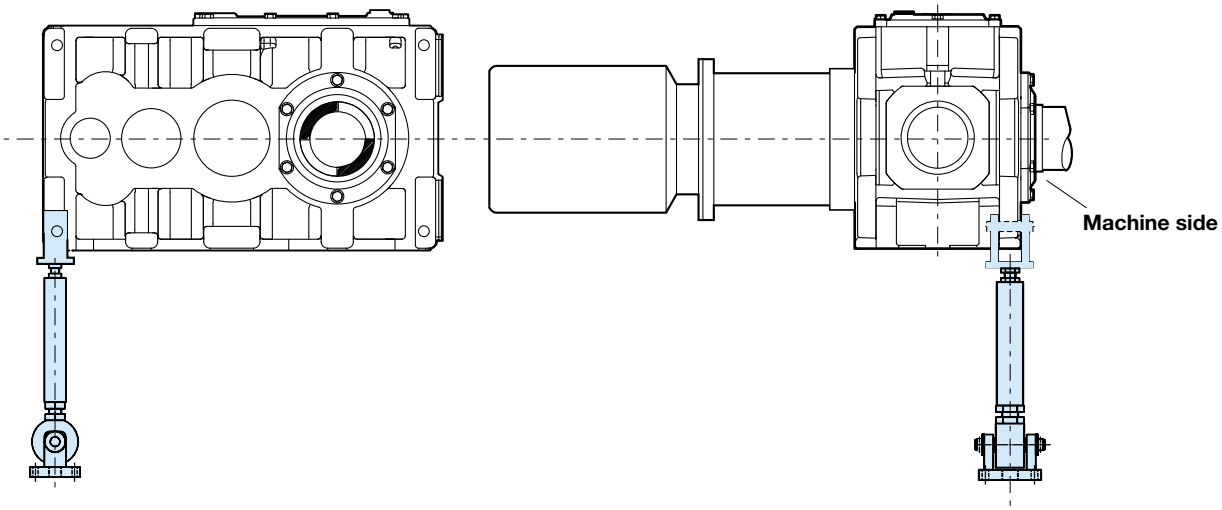

Dimensions on request

M-P..., J1-P..., J2-P...

M...

Motor base plate

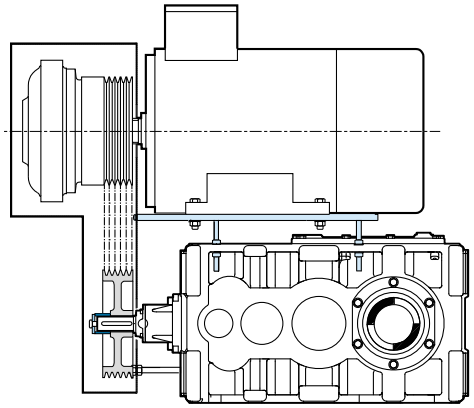

Only on request.

J1...

Swing base

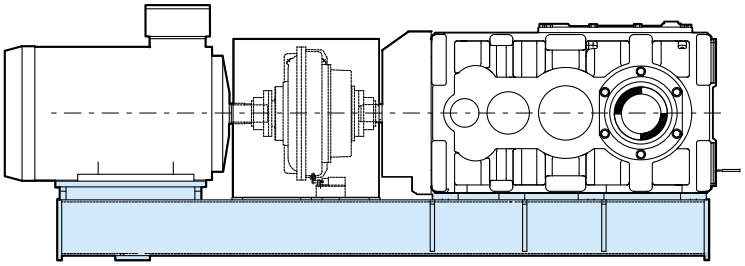

J2...

Motor scoop

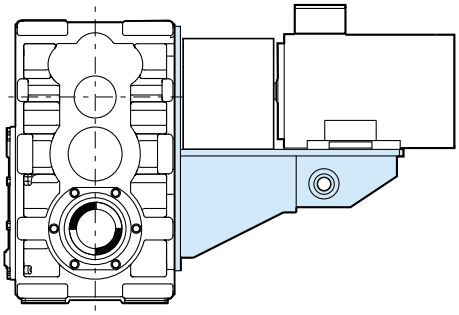

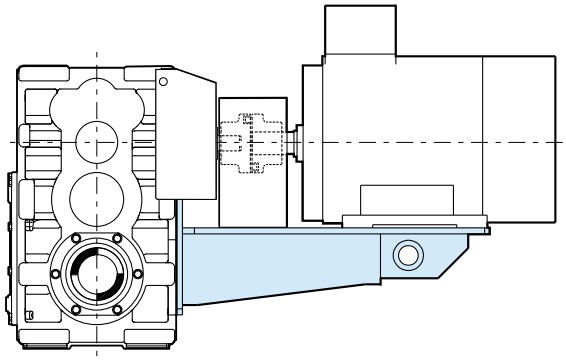

Dimensions on request

E2H, E3H.. -R11

MONOBLOCK HOUSING

Permissible location of shafts .1 and .2 see p. 10-11

Type E2H..-R11
E3H ..-R11

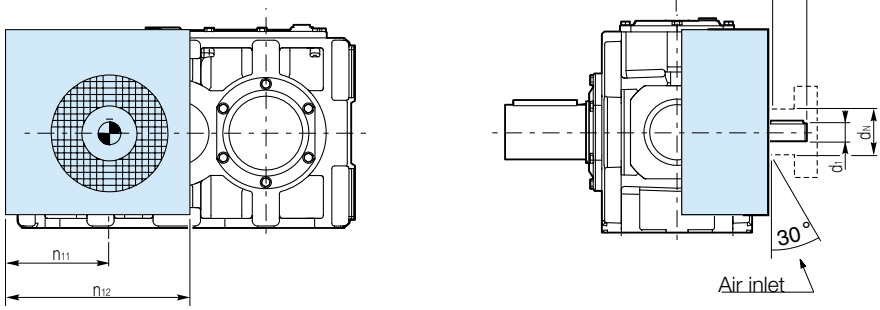

Attention:
To mount the feet- fitting screws, demount the fan cover.
Mounting of the input hub only after mounting of the feet-fitting screws.

		d_1 1)		$d_{N\ max}$	k_1	l_{11}	m_{11}	n_{11}	n_{12}
E2H	18 / 19 / 20	45 k6		140	275	80	195	199	360
	22 / 25	60 m6		140	337	100	237	244	460
	26 / 28 / 31	70 m6		140	369	100	269	289	555
E3H	18 / 19 / 20	35 k6	30 k6	100	283	60	223	120	375
	22 / 25	50 k6	40 k6	100	347	80	267	133	465
	26 / 28 / 31	50 k6	40 k6	140	362	80	282	162	555

1) According to ratio for version E3H see page 209.

E2H, E3H.. -R11

SPLIT HOUSING

Permissible location of shafts .1 and .2 see p. 10-11

Type E2H..-R11
E3H ..-R11

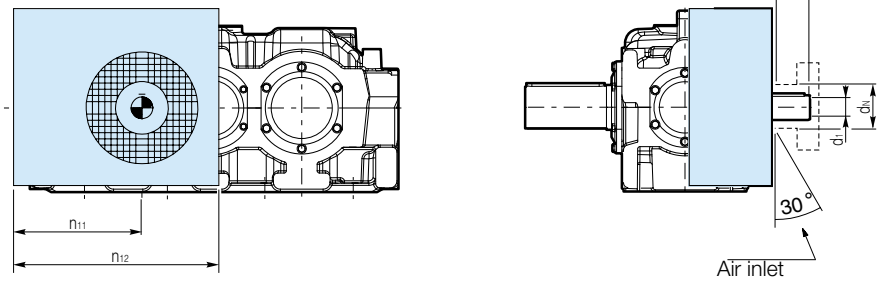

		d_1 [1]		$d_{N\ max}$	k_1	l_{11}	m_{11}	n_{11}	n_{12}
E2H	35 / 36 / 40	90 m6		180	446	140	306	413.5	703
	42 / 43	100 m6		180	537	175	362	513.5	856
	45 / 47	100 m6		180	537	175	362	513.5	856
	48 / 50 / 53	120 m6		200	600	175	425	613.5	1020
	56	120 m6		200	600	175	425	613.5	1020
E3H	35 / 36 / 40	70 m6	-	140	435	105	330	249.5	703
		-	50 k6	140	415	85	330	249.5	703
	42 / 43	80 m6	-	180	508	130	378	312.5	856
		-	65 m6	180	483	105	378	312.5	856
	45 / 47	80 m6	-	180	508	130	378	312.5	856
		-	65 m6	180	483	105	378	312.5	856
	48 / 50 / 53	100 m6	-	180	595	170	425	366.5	1020
	56	100 m6	-	180	595	170	425	366.5	1020

[1] **According to ratio for version E3H see page 236.**

E3B .. -R11 MONOBLOCK HOUSING

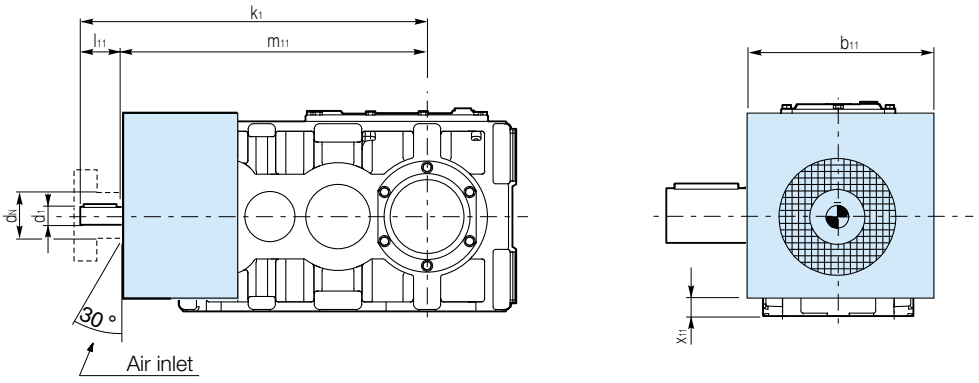

	b_{11}	d_1	$d_{N\ max}$	k_1	l_{11}	m_{11}	x_{11}
E3B 18	314	40 k6	140	699	80	619	39
E3B 19				730		650	
E3B 20				753		673	
E3B 22	380	50 k6	140	823	80	743	49
E3B 25				881		801	59
E3B 26	440	60 m6	140	986	105	881	59
E3B 28				986		881	59
E3B 31				1054		949	89

E3B .. -R11 SPLIT HOUSING

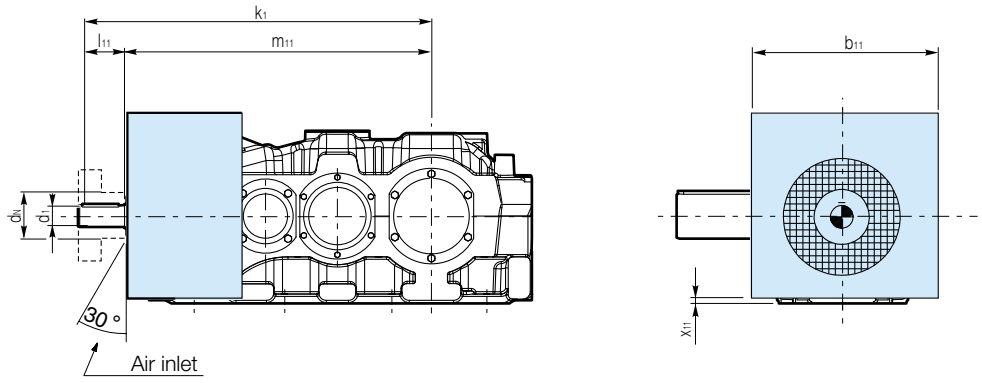

	b_{11}	d_1	$d_{N\ max}$	k_1	l_{11}	m_{11}	x_{11}
E3B 35	510	75 m6	150	1214	120	1094	16
E3B 36	510	75 m6	150	1244	120	1124	16
E3B 40	510	75 m6	150	1291	120	1171	16
E3B 42	590	85 m6	180	1455	140	1315	16
E3B 43	590	85 m6	180	1492	140	1352	16
E3B 45	590	85 m6	180	1521	140	1381	16
E3B 47	590	85 m6	180	1607	140	1467	16
E3B 48	700	100 m6	180	1792	175	1617	16
E3B 50	700	100 m6	180	1792	175	1617	16
E3B 53	700	100 m6	180	1863	175	1688	16
E3B 56	700	100 m6	180	1956	175	1781	16

E2H, E3H, E4H, E3B, E4B, E3C, E4C.. -R1

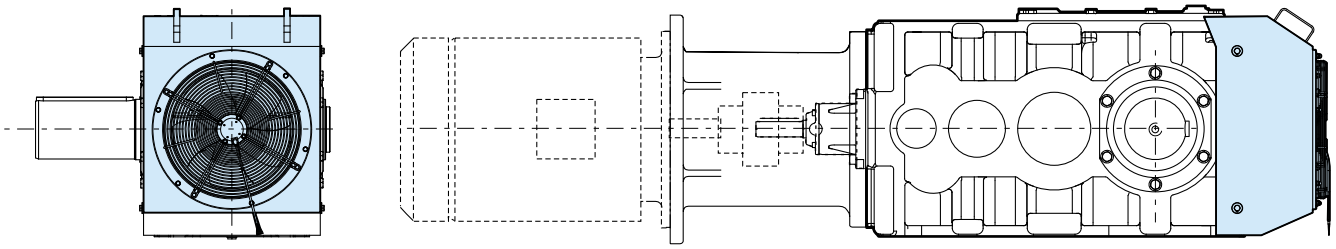

Dimension on request.

On request we can deliver an electrical fan on the output side of the gearbox if there is no possibility to install a shaft mounted fan.

E2H, E3H, E4H, E3B, E4B, E3C, E4C.. -R1

Water connection for cooling coil **without** cooling water controller

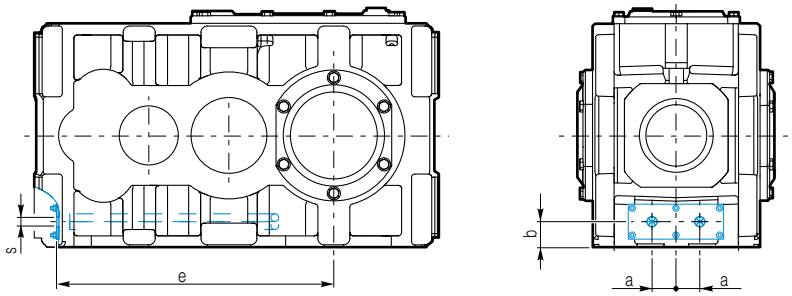

Water connection for cooling coil **with** cooling water controller

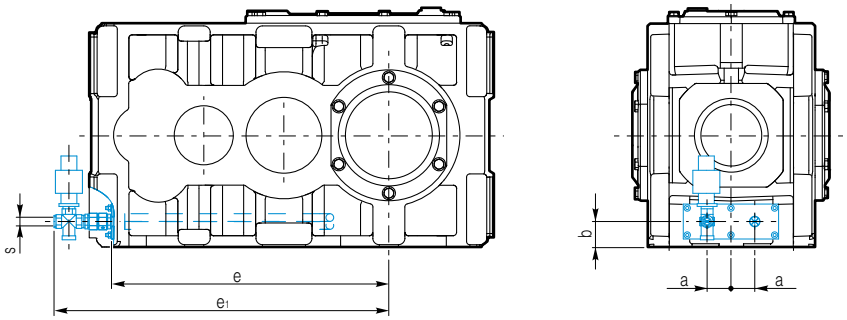

		a	b	e	e_1	s	V Water l/min	Δ p W bar
E2H - E3H - E4H E3B - E4B E3C - E4C	18	32,5	45	462	582	G 3/4"	8	0.6
	19	32,5	40	506	626		16	
	20	32,5	50	516	636		6	
	22	42,5	55	579	699		8	
	25	42,5	55	649	769		16	
	26	55	65	696	816		8	
	28	55	65	696	816		8	
	31	55	70	760	880		16	
E2H - E3H - E4H E3B - E4B	35	50	52	935	1055	G 3/4"	16	0.6
	36	50	78	965	1085		16	
	40	50	84	1012	1132		16	
	42	50	68,5	1115	1276		16	
	43	50	75	1152	1313		16	
	45	50	85	1181	1342		16	
	47	50	85	1267	1387		16	
	48	60	90	1379	1540		16	
	50	60	90	1379	1540		16	
	53	70	100	1450	1570	G 1"	20	
	56	70	105	1543	1663		20	

Cooling coil in housing type 22 (page 251) not available.
Cooling coil on E3B/E4B with motor bell housing or tunnel bell housing is not available.

E2H, E3H, E4H, E3B, E4B, E3C, E4C.. -R1

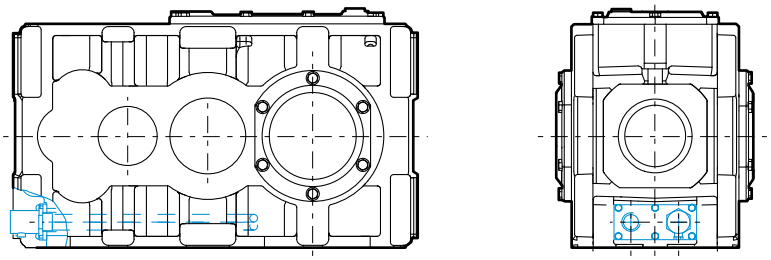

E2H, E3H, E4H, E3B, E4B, E3C, E4C

Standard sealing

Single seal with dust lip

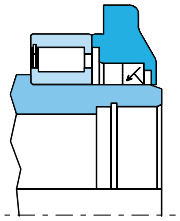

Hollow shaft

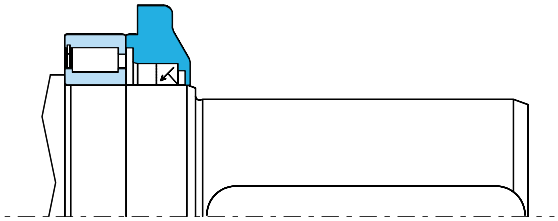

Solid shaft

Special seals according to the operating conditions

Two shaft seals outer with dust lip

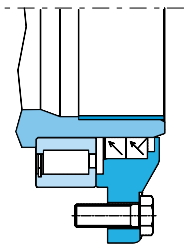

Hollow shaft

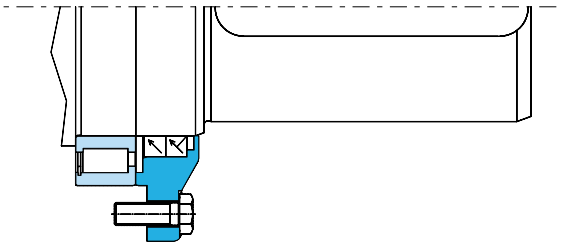

Solid shaft

E2H, E3H, E4H, E3B, E4B, E3C, E4C

Special seals according to the operating conditions

Two shaft seals with additional refillable grased labyrinth seals (Taconite sealing)

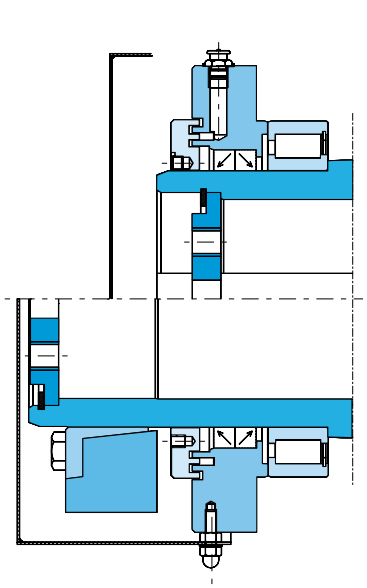

Hollow shaft

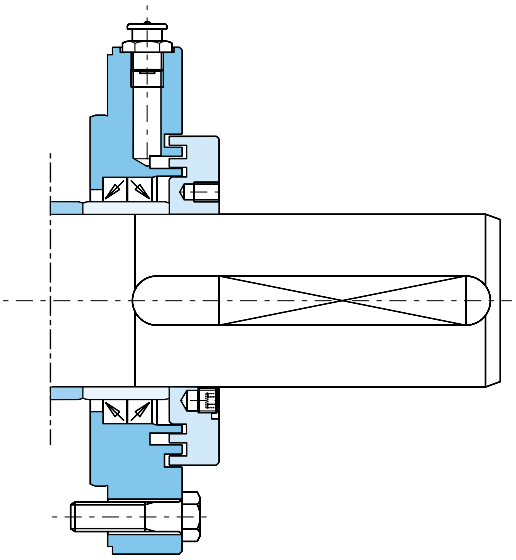

Solid shaft

Contact less seals

Special seals according to the operating conditions
Contactless shaft seals with additional refillable greased labyrinth seals (Taconite sealing).
Available for all type of input- and output shafts.

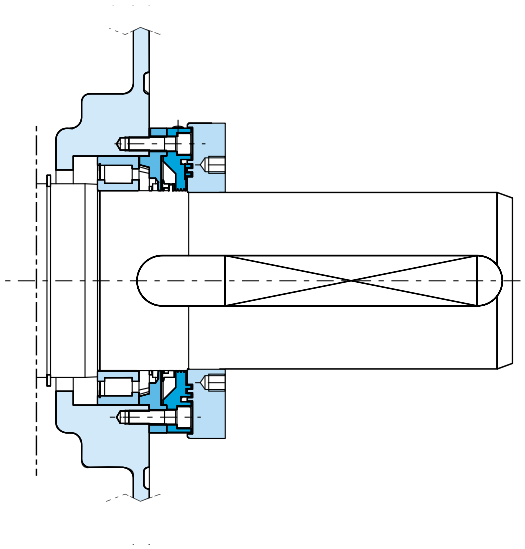

E3B, E4B, E3C, E4C

F = Free-wheel
R = Backstop

The elements R and F are located in closed housings and are lubricated by the gearing oil.

Version A

To avoid a turn back of the installation, the auxiliary drive must possess a motor-brake

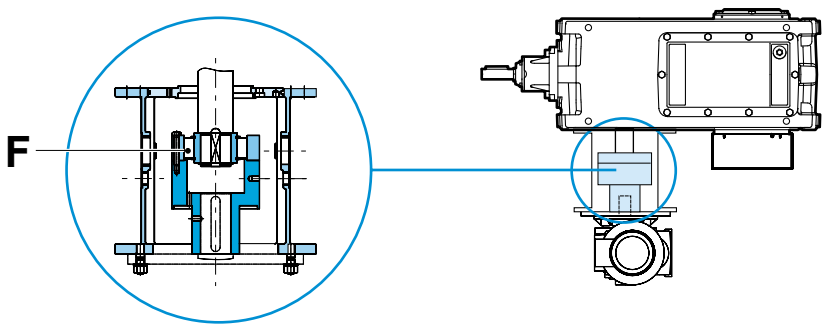

Version B

Standard execution

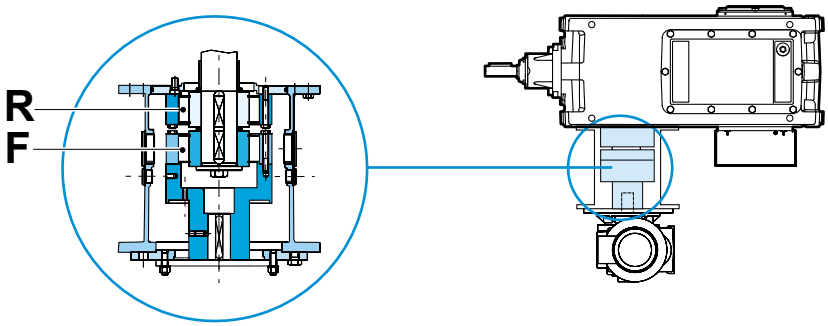

Version C

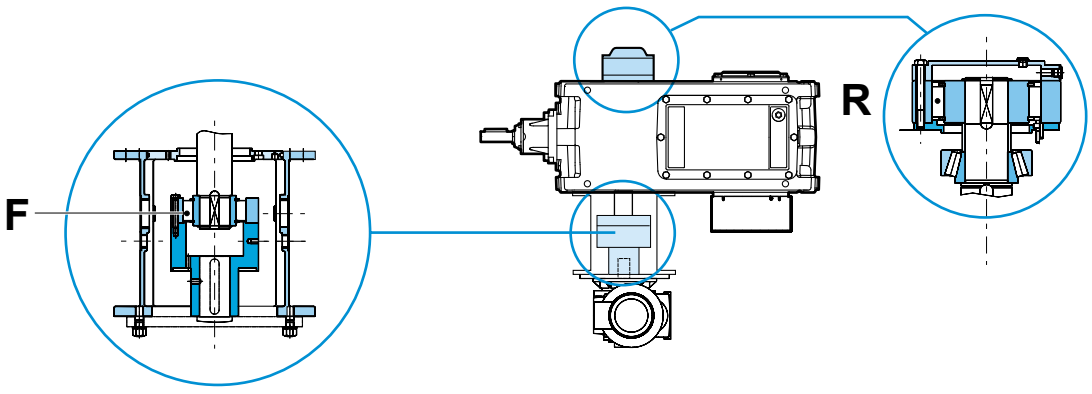

Available on request for E2H, E3H and E4H.

E3B, E4B, E3C, E4C

Shaft arrangement and sense of rotation - Version C

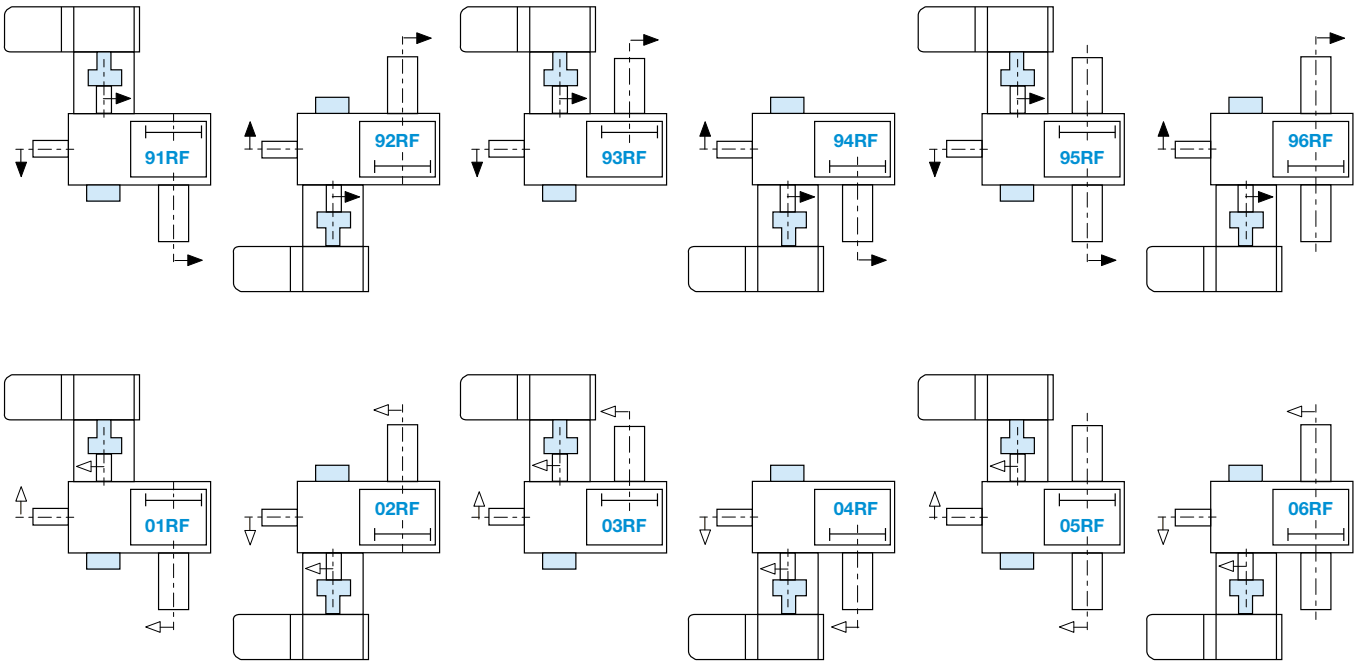

Designation

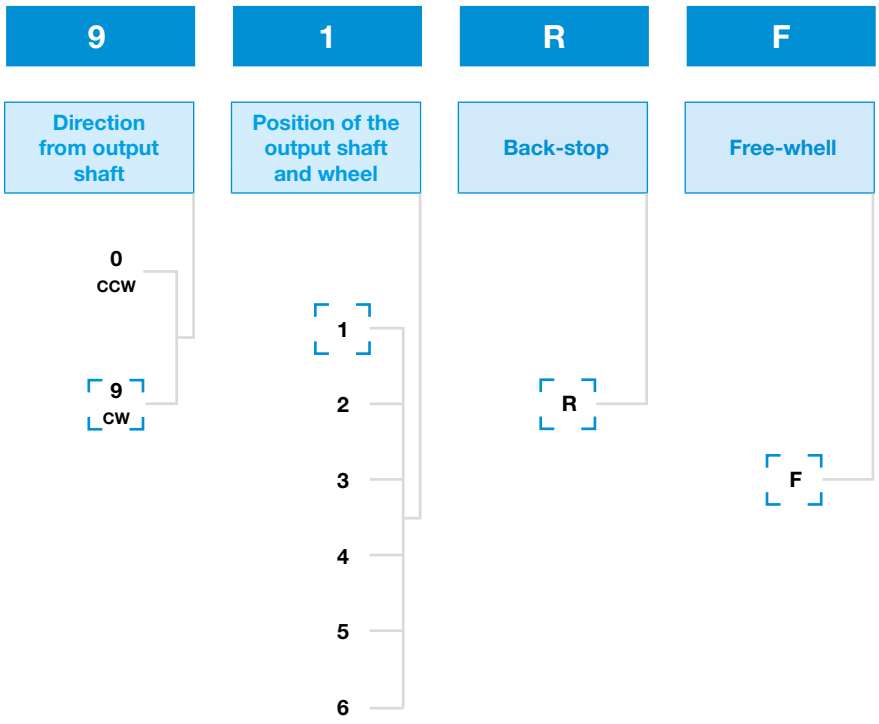

Available on request for E2H, E3H and E4H.

E2H, E3H, E4H, E3B, E4B, E3C, E4C .. -R1

Flange pump

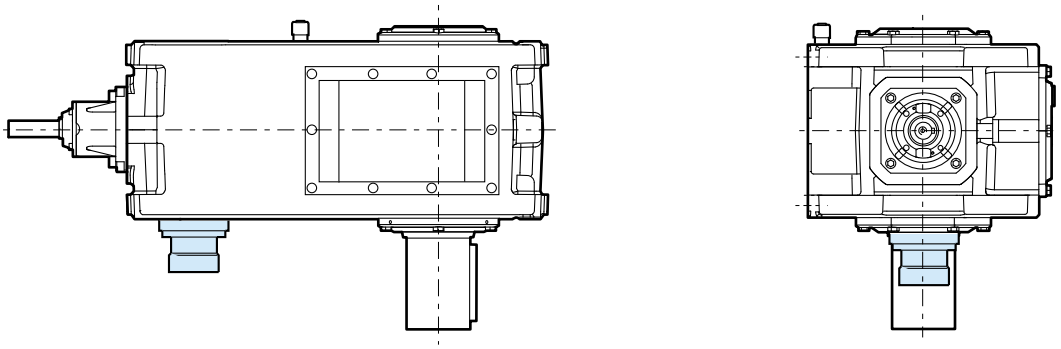

Motor pump

a) With pressure lubrication (motor pump)

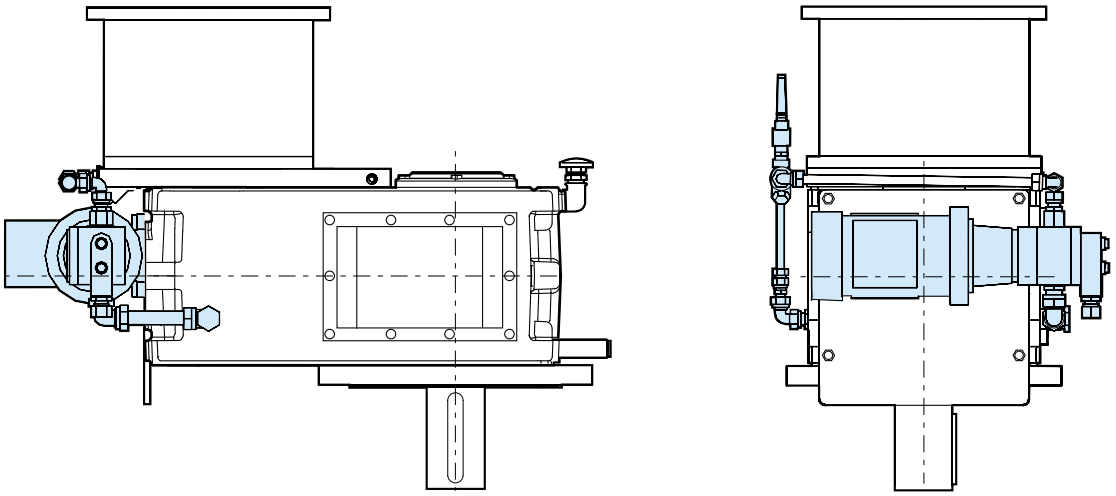

b) With pressure lubrication (motor pump) and plate cooler

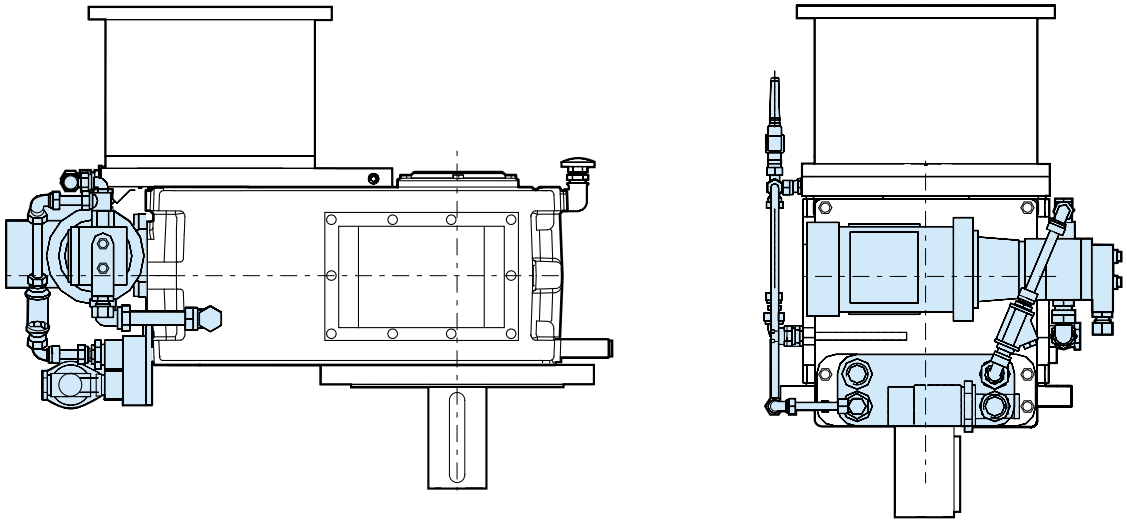

E2H, E3H, E4H, E3B, E4B, E3C, E4C .. -R1

Oil expansion tank

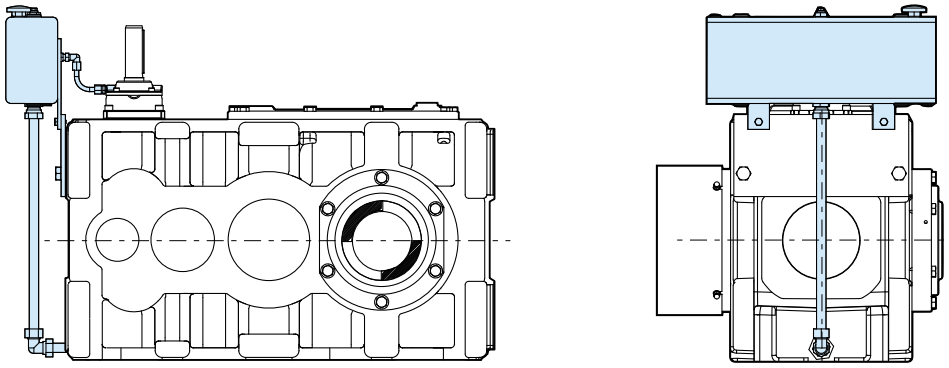

Piping system for forced lubrication

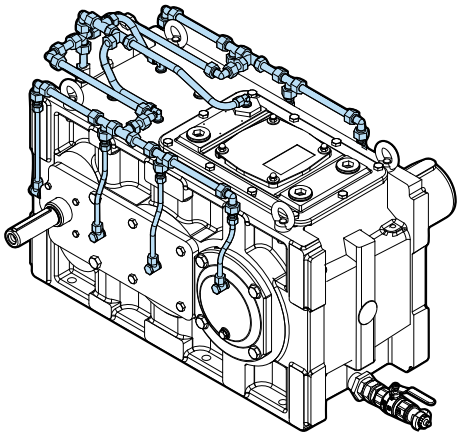

Greasing pipe system

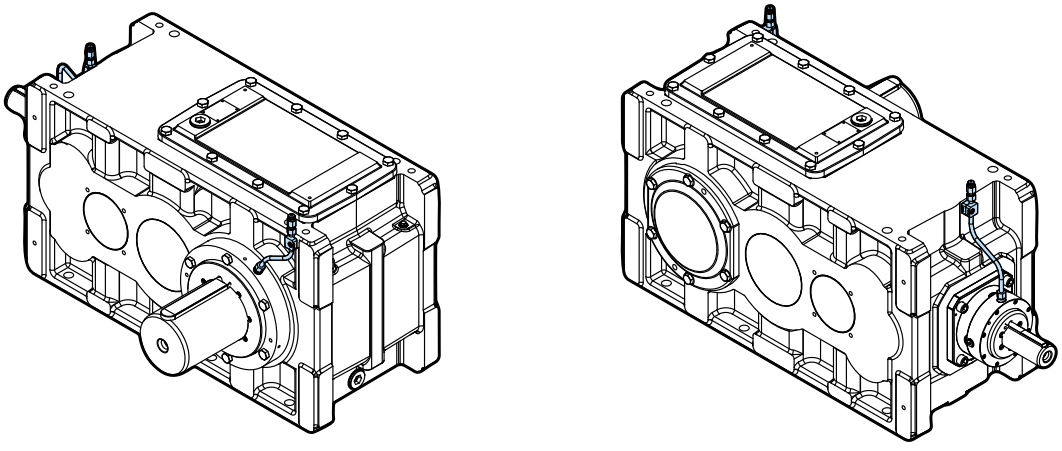

E2H, E3H, E4H, E3B, E4B, E3C, E4C .. -R1

Separate cooling and lubrication system

Dimensions on request

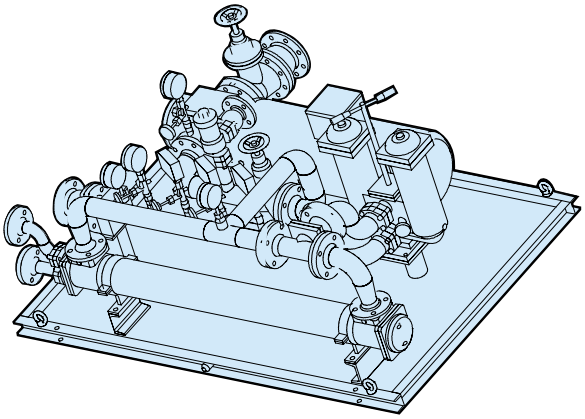

External water cooling system

Dimensions on request

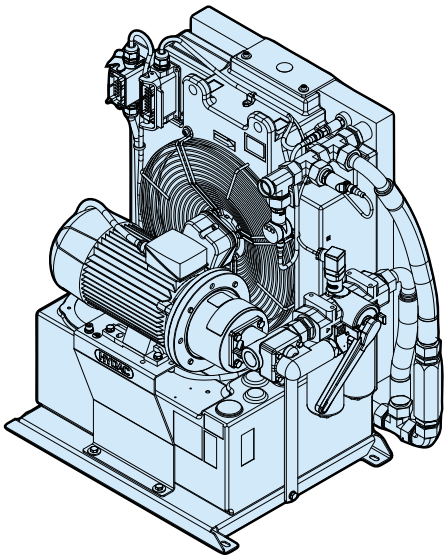

E2H, E3H, E4H, E3B, E4B, E3C, E4C .. -R1

Attachment of sensors for control of rolling bearing

In order to avoid unplanned machine downtimes, we can offer the gearbox ready for gears and bearings condition monitoring. Starting with the oil temperature monitoring up to the monitoring of the rolling bearings.
We supply the threaded holes for the sensors as standard feature, and we can supply the sensor on request only.

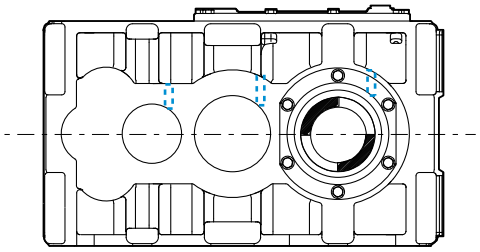

E2H, E3H, E4H, E3B, E4B, E3C, E4C



Breather with filter
A breather with a filter can be used to prevent dust from entering the gearbox while the gear unit is cooling down.

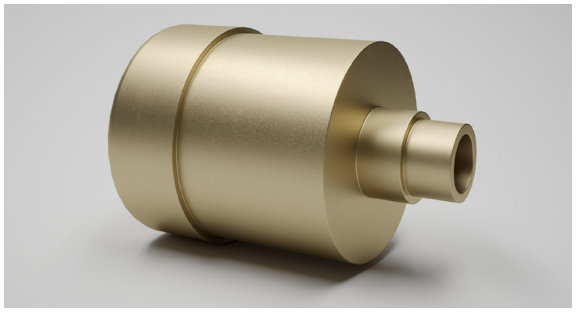

Breather with wet filter
If the humidity is high, we recommend a breather with wet filter to prevent water vapor from penetrating the gear oil.

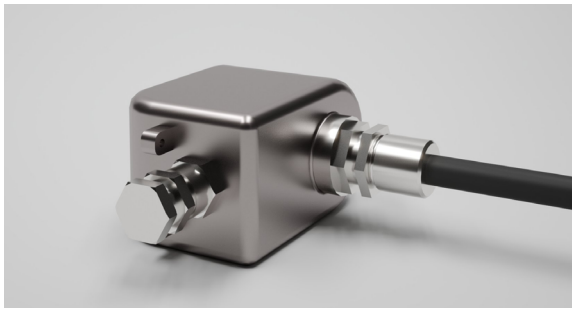

Temperature switch
To control the max. oil temperature there is the possibility to install a Temperature switch into the oil sump and get output signal when the temperature is above certain level.

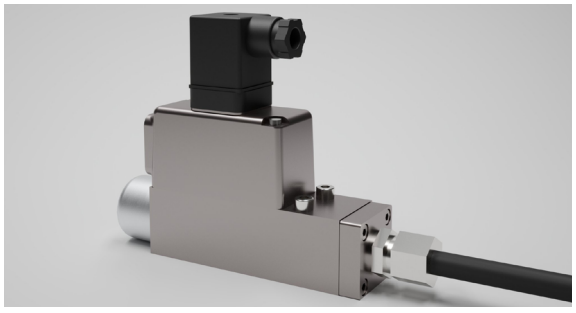

Pressure switch
In case of a force lubrication or cooling unit there is the possibility to control the oil pressure with a pressure switch. If the oil pressure is below certain pressure a signal will stop the main motor of the gearbox.

E2H, E3H, E4H, E3B, E4B, E3C, E4C



PT100
To monitor the oil temperatures on the gearbox, and set up different level of attention at certain temperature, for instance start, alert and stop of the gearbox.

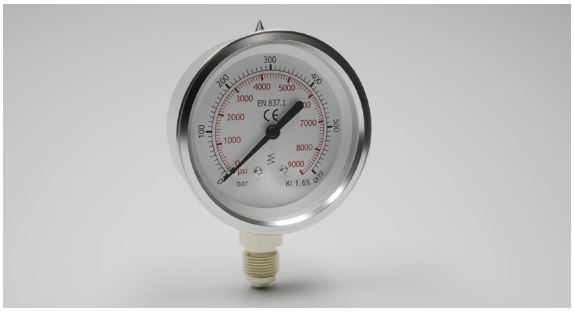

Manometer
In case of a force lubrication or cooling unit there is the possibility to have visual control the oil pressure with a manometer.



Oil level switch
With the oil level switch is it possible to control the min. oil level of the gearbox in case you use a heater.



Oil drain with ball valve
For an easy, safe and clean oil drain from the gearbox, we can deliver an oil drain with a ball valve

E2H, E3H, E4H, E3B, E4B, E3C, E4C



Oil filter, single, double
To increase the bearing lifetime is it possible in case of force lubrication / cooling to use an oil filter. We recommend a double switching filter for 24 hours operation.



Regulator for quantity of cooling water
In order to have a constant gear oil temperature with water cooling, we recommend the installation of a water regulator.

The Brevini EvoMax™ gearbox is designed for rough Heavy Duty, Material Handling and Marine application.
They ensure high performances in demanding applications based on their modularity and a wide range of combinations.
Based of the Brevini EvoMax™ gearbox Series we deliver dedicated developed product series for special application for example steel or crane industry.

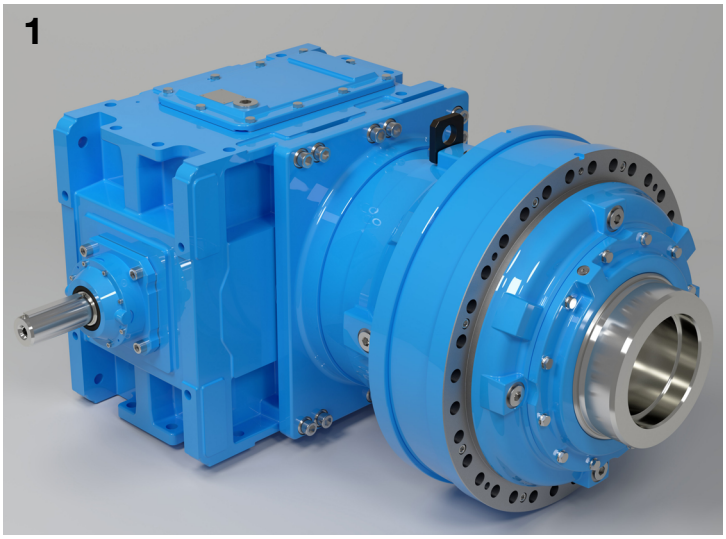

1 - High Power
The High Power is a compact bevel-helical gearbox with a planetary gearbox on the output.
Torque range from 90 kNm up to 2.100 kNm
Ratios up to 8.000

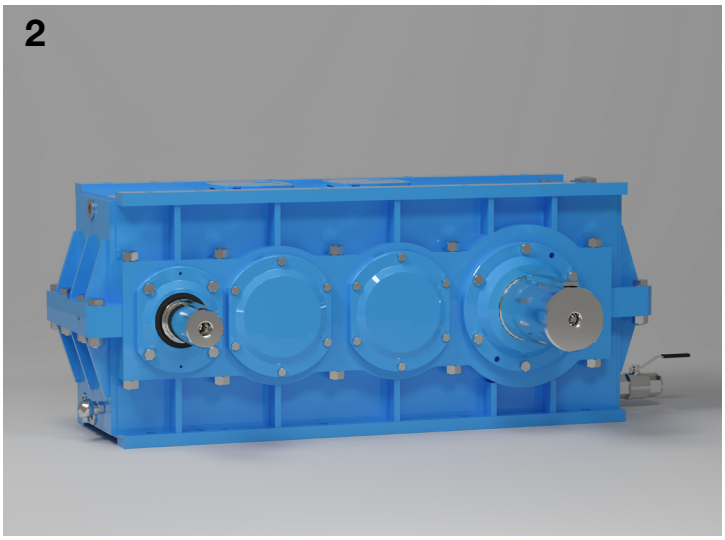

2 - POSIRED N
The POSIRED N is a helical gearbox with a extended center distance
Torquerange 8 kNm up to 290 kNm
Ratios from 12,5 up to 500

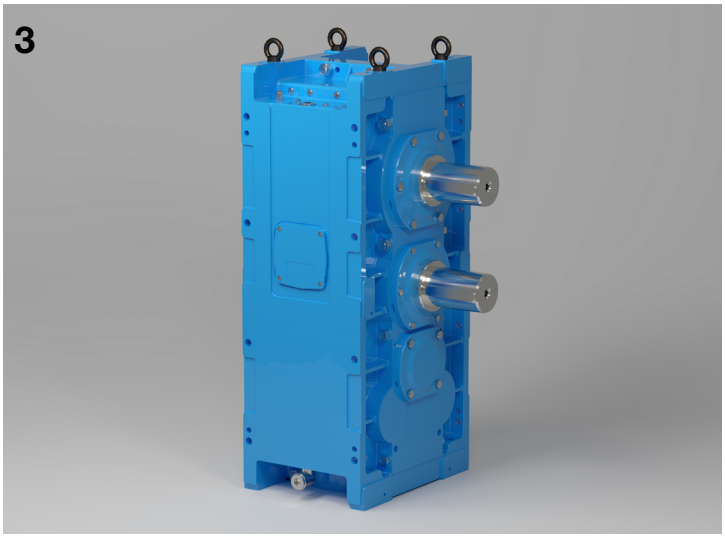

3 - POSIRED TS
The POSIRED TS is helical gearbox with two counter rotating output shafts.
Torquerange 1 kNm up to 110 kNm
Ratios from 5 up to 100

CONVERSION FACTORS

	SI system into Imperial System	Imperial System into SI System
Power rating	kW x 1.341 = HP	HP x 0.7457 = kW
Torque	Nm x 8.851 = in-lbs Nm x 0.7375 = ft-lbs	in-lbs x 0.113 = Nm ft-lbs x 1.356 = Nm
Force	N x 0.2248 = lbs	lbs x 4.4482 = N
Stress	N/mm^2 x 0.00689 = lbs/in^2 (psi)	lbs/in^2 x 145.04 = N/mm^2
Mass moment of inertia	kgm^2 x 23.73 = $lb\text{-}ft^2$	$lb\text{-}ft^2$ (psi) x 0.0421 = kgm^2
Lenght	mm x 0.03937 = inches m x 39.3701 = inches m x 3.2808 = foot µm x 0.03937 = mil (0.001 in)	inches x 25.4 = mm inches x 0.0254 = m foot x 0.3048 = m mil (0.001 in) x 25.4 = µm
Weight (mass)	kg x 2.205 = lbs	lbs x 0.4536 = kg
Volume	l x 0.264 = US gal	US gal x 3.785 = l
Volume flow rate	l/min x 0.264 = gal/min (GPM) m^3/h x 0.2271 = gal/min (GPM)	gal/min (GPM) x 3.785 = l/min gal/min (GPM) x 4.403 = m^3/h
Velocity	m/s x 196.85 = ft/min	ft/min x 0.0051 = m/s

Symbol	Name	Symbol	Name	Approximate temperature	
				°C	deg F
Nm N/mm^2 kgm^2	Newton-Meter Newton/Millimeter^2 Kilogramm-Meter^2	in-lbs ft-lbs lbs/in^2 (psi)	inch pounds foot pounds pounds/inch^2	20 27 38	68 80 100
m mm µm	Meter Millimeter (0.001 Meter) Mikrometer (0.001 Millimeter)	in ft mil	inches foot 0.001 inch	-18 -12 -7	0 10 20
kg kW N	Kilogramm Kilowatt Newton	lbs HP	pounds horsepower	0 4 15	32 40 60
l l/min m^3/h m/s	Liter Liter/Minute Meter^3/Stunde Meter/Sekunde	$lb\text{-}ft^2$ US gal gal/min (GPM) ft/min	pound foot^2 US gallons gallons/minute foot/minute	49 60 77 93	120 140 170 200

Torque calculation			
SI system		**Imperial System**	
$T = 9550 \times \frac{P}{n}$ [Nm]	P in kW n in min^{-1}	$T = 5252 \times \frac{P}{n}$ [ft-lbs] $T = 63025 \times \frac{P}{n}$ [in-lbs]	P in HP n in rpm
$T = 159.2 \times \frac{P}{n}$ [Nm]	P in kW n in 1/s	$T = 87.53 \times \frac{P}{n}$ [ft-lbs] $T = 1050.42 \times \frac{P}{n}$ [in-lbs]	P in HP n in rps

© 2025 Dana Limited. All rights reserved.
The reproduction, distribution and utilization of this document as well as the communication of its contents to others without explicit authorization is prohibited.
Offenders will be held liable for the payment of damages. All rights reserved in the event of the grant of a patent, utility model or design.
We reserve the right to change or modify our product specifications, configurations, or dimensions at any time without notice.

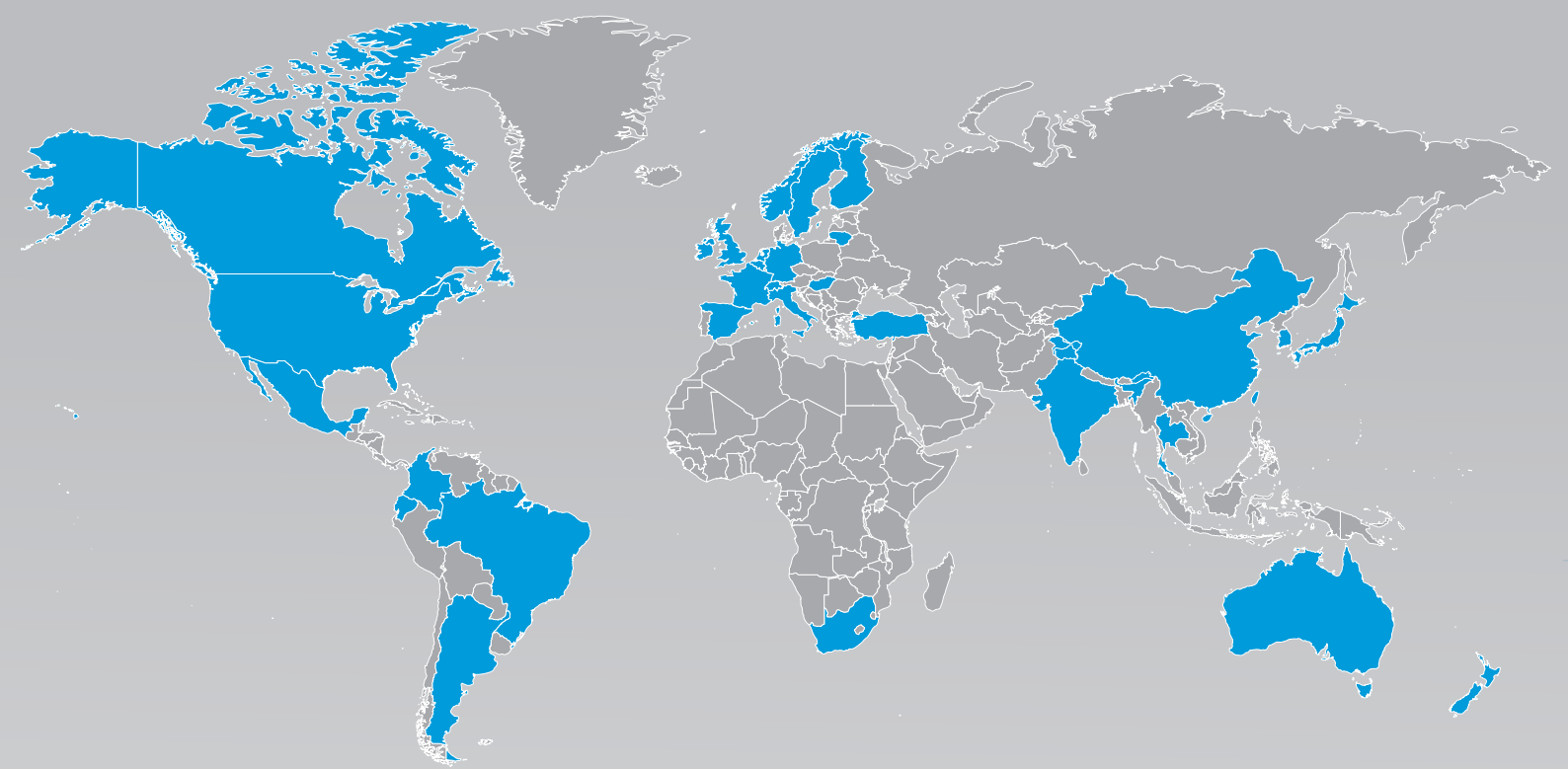

Technologies Customized to **Every Part of the Globe**

With a presence in 31 countries, Dana Incorporated boasts more than 150 engineering, manufacturing, and distribution facilities. Our worldwide network of local service centers provides assurance that each customer will benefit from the local proximity and responsiveness.





About Dana Incorporated

Dana is a leader in the design and manufacture of highly efficient propulsion and energy-management solutions that power vehicles and machines in all mobility markets across the globe. The company is shaping sustainable progress through its conventional and clean-energy solutions that support nearly every vehicle manufacturer with drive and motion systems; electrodynamic technologies, including software and controls; and thermal, sealing, and digital solutions. Founded in 1904, we employ thousands of people across six continents.

About Dana Off-Highway Drive and Motion Systems

Dana delivers fully optimized Spicer® drivetrain and Brevini® motion systems to customers in construction, agriculture, material-handling, mining, and industrial markets. We bring our global expertise to the local level with technologies customized to individual requirements through a network of strategically located technology centers, manufacturing locations, and distribution facilities.

Learn more about Dana's drivetrain and motion systems at **dana.com/offhighway**.

Dana-Industrial.com

Application Policy
Capacity ratings, features, and specifications vary depending upon the model and type of service. Application approvals must be obtained from Dana; contact your representative for application approval. We reserve the right to change or modify our product specifications, configurations, or dimensions at any time without notice.

DANA

BREVINI®
Motion Systems

© 2025 Dana Limited. All rights reserved. DC1G1G1-0000000R3 - 07/2025