DC3A1B1-3A1C1_0
12 2021

Product Catalog

Brevini® Gearmotors
M Series - N Series

Torques from 50 Nm to 18.000 Nm

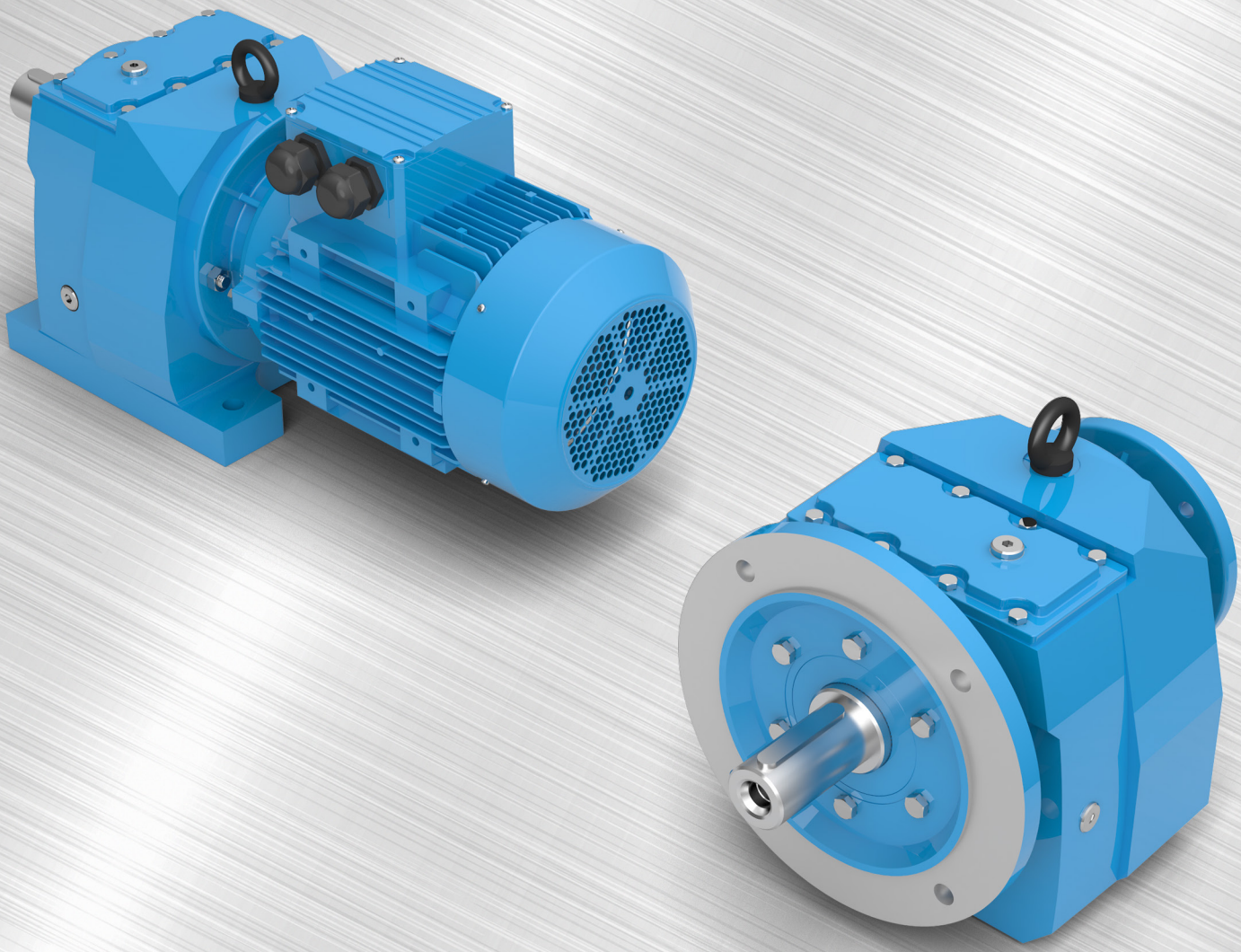

Foot and Flange - Mounted Helical Gearboxes

Foot and Flange-mounted in line helical gear units with solid output shaft, Input and output shafts are parallel to each other

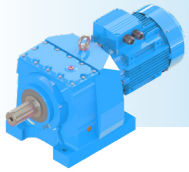

GENERAL INFORMATIONS

	Pag.
Key of Symbols	03
Production Range	04
General Specifications of M Series Gearboxes	05
Technical Explanations	06
Accessories	06
Surface Protection	07
Unit Designation	08
Example Designations	11
Geomet. Possible Combinations of Ratios According to Motor Size	12
Service Factor	14
Load Classification	15
Direction of Rotation	16
Radial Loads	17
Calculation Of Radial Loads	18
Equivalent Power Calculation	19
Equivalent Power Rating Example	20
Gearbox Selection	21
Gearbox Selection Form	22
Lubrication	23
Expansion Tank	23
Oil Types	24
Mounting Positions	25
M Series 2 - 3 Stage Oil Level Plugs and Oil Quantities	26
N Series 2 - 3 Stage Oil Level Plugs and Oil Quantities	27
M Series 4 Stage Oil Level Plugs and Oil Quantities	28
N Series 4 Stage Oil Level Plugs and Oil Quantities	29
M Series 5 -6 Stage Oil Level Plugs and Oil Quantities	30
N Series 5 - 6 Stage Oil Level Plugs and Oil Quantities	31
AC Motors	32
General Specifications	32
Modes of Operation	33
Protection Class	34
Insulation Class	34

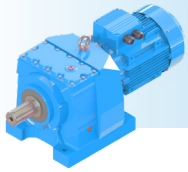

GENERAL INFORMATIONS

	Pag.
AC Motors	
Efficiency Classes	34
AC Frequency Inverters	35
DC Motors	36
General Specifications	36
Operating principals	36
Types	36
Speed Control	36
Electromagnetic Brakes	37
Types	37
Working Voltages	37
Connection Types	38
Selection	39
Thermal Capacity	40
Performance Tables	41
MR / MV / MN / NR / NV / NN	41
MT / NT	96
Dimension Pages	109
MR / NR Series	109
MN / NN Series	140
MV / NV Series	180
MRF Series	210
MNF Series	226
MVF Series	250
NRB Series	266
NNB Series	284
NVB Series	304
MT / NT Series	322
MTF Series	352
NTB Series	364
Electric Motors	383

c_t	: Coefficient of switch on time.	
f_s	: Service factor	
F_{ama}	: Permissible axial loads which can be applied to output shafts	[kN]
F_{ame}	: Permissible axial loads which can be applied to input shafts	[kN]
F_{qam}	: Permissible radial loads which can be applied to output shafts	[N]
F_{qem}	: Permissible radial loads which can be applied to input shafts	[N]
F_{qa}	: Radial loads applied to the output shaft	[N]
F_{qe}	: Radial loads applied to the input shafts	[N]
F_q	: Radial loads on output shaft	[N]
F_a	: Axial loads on output shaft	[N]
i	: Transmission ratio	
J_{ext}	: The total inertia of rotating parts at outside reduced at the motor shaft	[kgm^2]
M_2	: Output Torque	[Nm]
M_a	: Nominal Torque	[Nm]
n_1	: Input speed of gearbox	[rpm]
n_2	: Output speed of gearbox	[rpm]
P_2	:Output Power	[kW]
P_{eq}	: Equivalent Power	[kW]
P_e	: Nominal Power (given on performance tables)	[kW]
P_g	: Electric Motor Power	[kW]
P_M	: Power consumption of the driven machine (for alternating power, refer to equivalent power)	[kW]
t	: Time	[s]
T_e	: Equivalent torque	[Nm]

Production Range

This catalogue is containing **M and N series** of gearboxes only.

- M and N Series
M and N series of Dana are helical geared. The input and output shafts are parallel to each other and on the same plane.
The gearbox can be connected to the machine by using the foot or flange on the gearbox. Has solid output shaft.

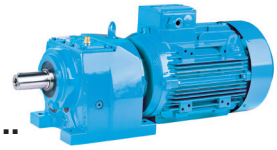

M ...

13 different sizes:
Torque range: 50 - 18.000 Nm
Speed range: 0,1 - 500 rpm

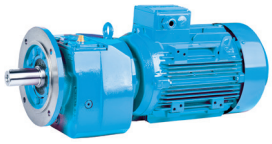

N ...

13 different sizes:
Torque range: 50 - 18.000 Nm
Speed range: 0,1 - 500 rpm

- D Series
D series are helical geared gearboxes with parallel input and output shafts. The shafts have a distance in between and located on the same plane. The gearbox can be assembled to the machine by using the foot, the connection screws on the sides, flange or torque arm on the gearbox.
Can have hollow or solid output shaft.

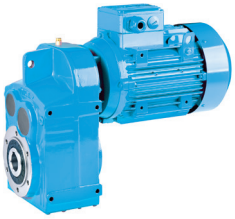

D...

11 different sizes:
Torque range: 150 - 18.000 Nm
Speed range: 0,1 - 350 rpm

- E Series
E series gearboxes are with worm and wormwheel. The input and output shafts are perpendicular to each other and have a distance in between. It can be assembled to the driven machine by the use of the foot, flange or torque arm on the gearbox.
Can have hollow or solid output shaft.

E ...

8 different sizes:
Torque range: 5 - 1.000 Nm
Speed range: 0,1 - 400 rpm

- K Series
These are gearboxes with helical and bevel gears. The input and output shafts are perpendicular to each other and have a distance in between. It can be assembled to the driven machine using the foot, flange or torque arm on the gearbox.
They have high efficiency compared to E series. Can have hollow or solid output shaft.

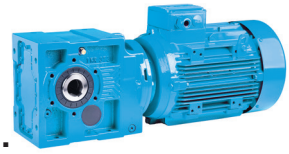

K ...

12 different sizes:
Torque range: 200 - 20.000 Nm
Speed range: 0,1 - 400 rpm

- T Series
T Series are gear units which are helical geared, two staged, hollow shaft mounted gear units and manufactured according to monoblock principal.
T Series gearboxes have hollow shaft and compact housing so that T series can be mounted on smaller places.

T ...

10 different sizes:
Torque range: 200-18.000 Nm
Speed range: 46-280 rpm

- VR Serie
VR hoist drives are produced according to M1 - M8 (1Dm - 5m) load classification.

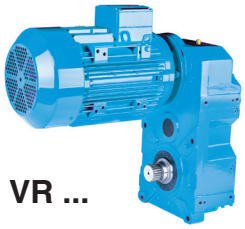

VR ...

VR Hoist Drive Units
M1 - M8 ,(1Dm - 5m) load classification
ISO 4301 / 1 ,(FEM 1.001 / III)

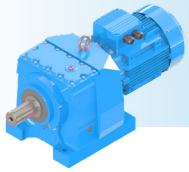

General Specifications of D Series Gearboxes

Dana M/N series gearboxes has been developed according to the one part housing principle (monoblock) which has advantages in rigidity, oil leakage, noise level and gear strength.

All bearings are supported by one part housing itself and not by cover plates or other parts which connects some other parts. Machining axes with one operation cycle gives high precision and very tight tolerances to axes.

With high manufacturing technologies achieved high gear qualities have response with housing from GG20-22 material. This design ensures high bearing and gear lifetime at the mean time; high radial loads can be taken.
Calculations of bearings, gears and shafts used in the gearbox has been made with professional software, which are implemented according to up-to-date standards.

The middle bearing support plate makes it possible to have optimum support for bearings used in three stage gearboxes. So run out and deformation by running on load is minimized which makes low noise gearbox production possible.
M series gearboxes have the ability of easy mounting and flexible usage.

Motor connection of gearboxes can be offered according to customers request suitable to direct, IEC B5 or B14 connection. All models can be delivered foot or flange mounted with two or three stages in one housing . Gearboxes have lower axis height than the old models and compact for the same power and speed.
All gearboxes has been designed modular so double gearboxes can be coupled with minimum change. Each tolerances on every part used in gearbox are actively controlled by our quality assurance system.

As we are Dana,our design principals are;

- Using high technology
- Reliability
- High power density
- High efficiency
- Mounting compatible
- Flexible solutions

Attention to the following points !

- Drawings are examples only and the details on the drawings or illustrations are not strictly binding.

- Dana reserve the right to make all kinds of changes in products and cataloques without any notice.

- Prior to commissioning, the operating instructions provided with the gearbox must be observed.

- Oil quantities given are guide values only. The exact quantity of oil should be checked by using the provided oil level plugs according mounting positions. For correct oil viscosity refer to the nameplate.

- If the mounting position is not informed upon ordering, the M series gear units are delivered according to **M1** and N series gear units are delivered according to **M4** mounting position. A different operation then the indicated mounting position on the name plate cancels the warranty.
The weights given in this catalogue are mean values. Depending on the ratio and accessories the weights can differ.

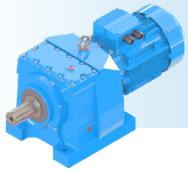

GENERAL INFORMATIONS

Technical Explanations

- Output Torque : M_2 [Nm]
Multiplication of motor output torque with transmission ratio and efficiency gives the result of output torque at the output shaft of the gear unit.

- Nominal Torque : M_a [Nm]
Nominal torque is the mechanical torque which the gearbox can resist under f_s=1 conditions.

- Nominal Power : P_e [kW]
The nominal power is the power which gearbox can mechanicaly resist under f_s=1 condition. The nominal powers are given on the performance tables.

- Ratio : i
Ratio between output shaft speed and input shaft speed. Available ratios of Dana M series are between 3,5 to 23500.

- Equivalent Power and Torque : P_{eq} [kW],T_e [Nm]
For gearbox unit with constant speed but variable working conditions : This is the calculated power or torque which is equivalent to the values at working under constant working conditions.

- Required Power : P_M [kW]
Required power for the applications which is able to drive the system.

- Required Torque : T [Nm]
Required torque for applications. Required torque always must be equal or smaller than output torque for selected gearbox.

- Permissible Axial and Radial Loads: F_{qem}, F_{qam} [N]
Permissible axial and radial load at the output or input shaft of gearboxes.

- Service Factor : f_s
Service factor is a safety coefficient, which takes into account the different running conditions of the driven machine. f_s=1 is used for uniform loads 8 hours working per day and up to 100 cycle per hour.

- Noise Level:
The noise level of our gearboxes is below the permitted values defined in VDI guidelines 2159 for gear units.

- Coating:
The gearboxes are painted with RAL 5012 according DIN1843. Different colors are avaliable upon request.

- Lubrication:
M and N series of gearboxes are filled with oils which is indicated on lubrication tables. For lubrication details please refer to the lubrication section.

Accessories

The following accessories can be applied to M and N series gearboxes.

- IEC B5/B14 Motor connection flange
- Output flanges
- Backstops
- Special sealing solutions.
- Transparent oil level indicator,
- Electromagnetic brakes.

For other accessories please contact, Dana.

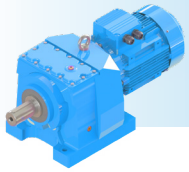

Surface Protection

Our products are all painted unless otherwise stated. 4 corrosion categories which are mentioned below can be offered according to corrosion categories of DIN EN ISO 12944-2 standard. Our standard paint meets C2 corrosion category. If different category is requested, please inform before order.
Unpainted parts such as shaft, flange connection surface are coated with anti-corrosion paint before shipment against corrosion.

Corrosion Categories	Ambient Conditions	Paint Type	Paint Thickness
C2 (Standard)	Indoor installation and outdoor installation with protection roof Environments with low humidity and contamination	Water Based Primer Coat Water Based or Acrylic Top Coat	80 µm 40 µm
C3	Indoor installation and outdoor installation subject to weathering Environments with mean humidity and contamination	Epoxy Primer Coat Acrylic Top Coat	80 µm 40 µm
C4	Indoor installation and outdoor installation subject to weathering Environments with occasionally high humidity and chemical contamination	Epoxy Primer Coat Acrylic Top Coat	180 µm 40 µm
C5-I / C5-M	Indoor installation and outdoor installation subject to weathering Environments with permanent high humidity and chemical cleaning contamination	Epoxy Zinc Primer Coat Epoxy Miox Primer Coat Acrylic Top Coat	70 µm 150 µm 40 µm

Unit Designation

M R 4 7 3 - 3 E90S / 4C - L02

Brake

L-220V	With Fan
P-24V	With Fan
S-220 V	Without Fan
Z-24 V	Without Fan

01-10 Nm	**10**-100 Nm
02-25 Nm	**20**-200 Nm
04-40 Nm	**30**-300 Nm
05-50 Nm	**40**-400 Nm

Number of poles

Motor Size

For MR / NR and MV / NV Types

E90S / 4

- Pole Number
- Frame Lenght
- Motor size
- Motor type

For MN / NN types MN / NN

A06 :63 B5	**A09** : 90 B5	**A13**:132 B5	**A25**: 250 B5
B06 :63 B14	**B09** : 90 B14	**B13**:132 B14	**A28**: 280 B5
A07 :71 B5	**A10** :100 B5	**A16**:160 B5	**A31**: 315 B5
B07 :71 B14	**B10** :100 B14	**A18**:180 B5	
A08 :80 B5	**A11** :112 B5	**A20**:200 B5	
B08 :80 B14	**B11** :112 B14	**A22**:225 B5	

Motor Efficiency Class

Stage

2 Kademe / 2 Stages / 2 stufig
3 Kademe / 3 Stages / 3 stufig
4 Kademe / 4 Stages / 4 stufig
5 Kademe / 5 Stages / 5 stufig
6 Kademe / 6 Stages / 6 stufig

Revision Number

Housing Size

1...9

Input Type

R	:With Motor
N	:IEC B5 / B14 Flanged without Motor
V	:IEC B5 / B14 Flanged with Motor
T	:With Solid Input Shaft

Gearbox Type

M Serie
N Serie

MR...	Monoblock type helical geared motors, foot mounted
NR...	Monoblock type helical geared motors, flange mounted
MN...	Monoblock type helical geared units with IEC B5/B14 motor flange, foot mounted
NN...	Monoblock type helical geared units with IEC B5/B14 motor flange, flange mounted
MV...	Monoblock type helical geared motors with IEC B5/B14 motor flange, foot mounted
NV...	Monoblock type helical geared motors with IEC B5/B14 motor flange, flange mountedh
MT...	Monoblock type helical geared units with solid input shaft, foot mounted
NT...	Monoblock type helical geared units with solid input shaft, flange mounted
MRF...	Monoblock type helical geared motors, foot mounted, with output flange
MNF...	Monoblock type helical geared units, foot mounted, with IEC B5/B14 flange, with output flange
MVF...	Monoblock type helical geared motors, foot mounted, with IEC B5/B14 flange, with output flange
MTF...	Monoblock type helical geared units, foot mounted, with solid input shaft, with output flange
NRB...	Monoblock type helical geared motors, with agitator output flange
NNB...	Monoblock type helical geared units, with agitator output flange with IEC B5/B14 flange
NVB...	Monoblock type helical geared motors, with agitator output flange with IEC B5/B14 flange
NTB...	Monoblock type helical geared units, with agitator output flange, with solid input shaft

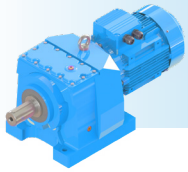

GENERAL INFORMATIONS

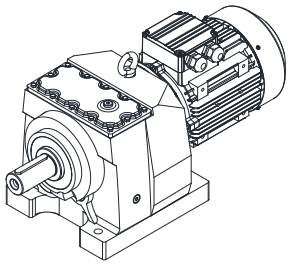 MR...	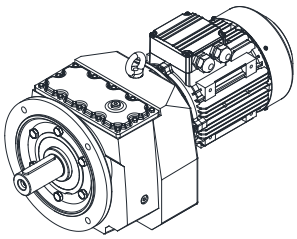 NR...	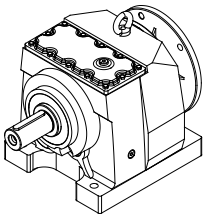 MN...	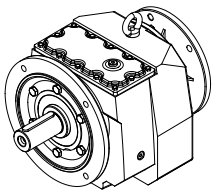 NN...
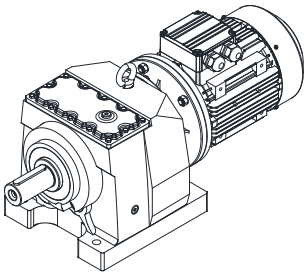 MV...	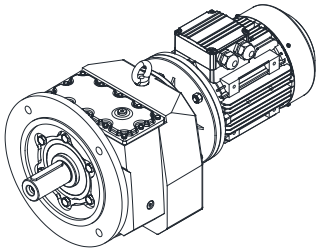 NV...	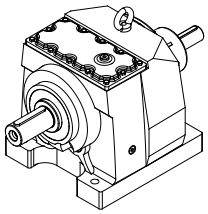 MT...	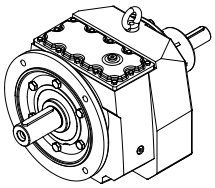 NT...
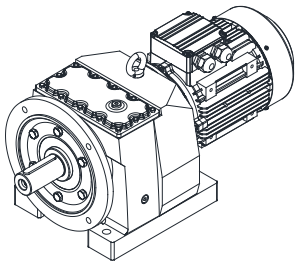 MRF...	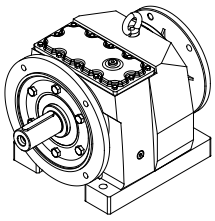 MNF...	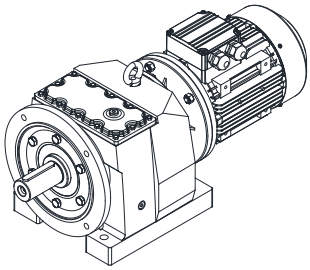 MVF...	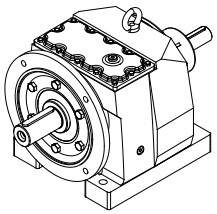 MTF...
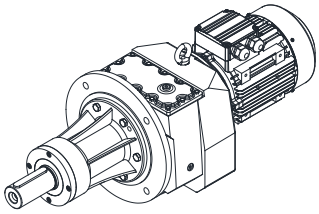 NRB...	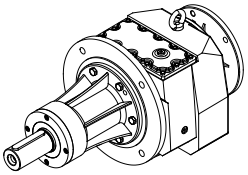 NNB...	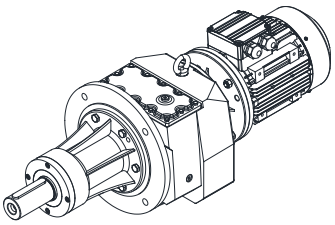 NVB...	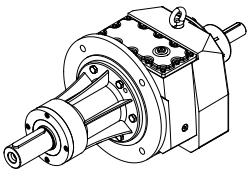 NTB...

MR172 - 3E90S/4C - L05

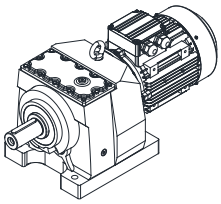

M.....: M series gearbox
R.....: With motor connection
1.....: Gear unit size
7.....: Revision number
2.....: Stage number
3.....: Efficiency class
E.....: Motor type
90S.....: Motor frame size
4C.....: Number of poles
L05.....: Brake type

MT373

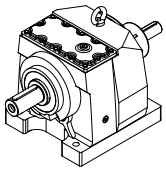

M.....: M series gearbox
T.....: Solid input shaft
3.....: Gear unit size
7.....: Revision number
3.....: Stage number

MN473 - A11

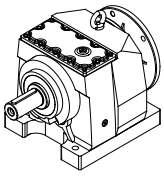

M.....: M series gearbox
N.....: IEC B5 flange without motor input
4.....: Gear unit size.
7.....: Revision number
3.....: Stage number
A11.....: Motor type 112, B5 flange

NRB473 - 3E100L/4C

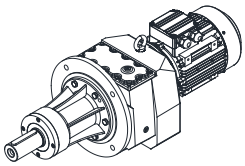

N.....: N series gearbox
R.....: With motor
B.....: Agitator flange
4.....: Gear unit size
7.....: Revision number
3.....: Stage number
3.....: Efficiency class
E.....: Motor type
100L.....: Motor size
4C.....: Number of poles

Geometrically Possible Combinations

		Motor Size						
Type	**Stages**	**63**	**71**	**80**	**90**	**100**	**112**	**132**
MR002	2	3,62 - 11,14	3,62 - 11,14	3,62 - 11,14	3,62 - 11,14	-	-	-
MR003	3	13,61 - 45,18	13,61 - 45,18	13,61 - 32,02	13,61 - 32,02	-	-	-
MR102	2	3,94 - 15,95	3,94 - 15,95	3,94 - 15,95	3,94 - 15,95	-	-	-
MR103	3	17,33 - 50,51	17,33 - 50,51	17,33 - 50,51	17,33 - 50,51	-	-	-
MR172	2	3,38 - 20,92	3,38 - 20,92	3,38 - 20,92	3,38 - 20,92	3,38 - 18,28	3,38 - 6,60 11,08 - 12,66	-
MR173	3	26,10 - 99,21	26,10 - 99,21	26,10 - 99,21	26,10 - 99,21	26,10 - 87,60	26,10 - 30,26 49,81 - 57,76	-
MR202	2	3,50 - 23,01	3,50 - 23,01	3,50 - 23,01	3,50 - 23,01	3,50 - 20,10	3,50 - 13,92	-
MR203	3	23,23 - 68,03	23,23 - 68,03	23,23 - 68,03	23,23 - 68,03	23,23 - 24,77 36,02 - 59,43	36,02 - 41,16	-
MR272	2	3,16 - 25,89	3,16 - 25,89	3,16 - 25,89	3,16 - 25,89	3,16 - 21,43	3,16 - 16,07	3,16 - 11,95
MR273	3	19,00 - 138,55	19,00 - 138,55	19,00 - 138,55	19,00 - 138,55	19,00 - 121,03	19,00 - 83,83	19,00 - 60,66
MR275	5	149,02 - 1194,61	149,02 - 1194,61	149,02 - 1194,61	149,02 - 1194,61	-	-	-
MR276	6	1463,49 - 2920,17	1463,49 - 2920,17	1463,49 - 2920,17	1463,49 - 2920,17	-	-	-
MR282	2	-	4,20 - 6,25 9,61 - 30,37	4,20 - 6,25 9,61 - 30,37	4,20 - 6,25 9,61 - 30,37	3,15 - 25,23	3,15 - 19,06	3,15 - 14,31
MR283	3	-	18,33 - 27,80 41,96 - 137,91	18,33 - 27,80 41,96 - 137,91	18,33 - 27,80 41,96 - 137,91	18,33 - 114,14	18,33 - 85,60	18,33 - 27,80 41,96 - 63,65
MR284	4	158,52 - 431,18	158,52 - 431,18	158,52 - 431,18	158,52 - 431,18	-	-	-
MR285	5	376,94 - 1365,28	376,94 - 1365,28	376,94 - 1365,28	376,94 - 1365,28	-	-	-
MR286	6	1817,07 - 3214,82	1817,07 - 3214,82	1817,07 - 3214,82	1817,07 - 3214,82	-	-	-
MR372	2	-	13,53 - 23,33	13,53 - 23,33	13,53 - 23,33	3,28 - 23,33	3,28 - 20,62	3,28 - 16,20
MR373	3	-	18,68 - 20,64 29,47 ; 48,00 - 157,76	18,68 - 20,64 29,47 ; 48,00 - 157,76	18,68 - 20,64 29,47 ; 48,00 - 157,76	18,68 - 138,72	18,68 - 97,92	18,68 - 72,81
MR374	4	181,34 - 524,07	181,34 - 524,07	181,34 - 524,07	181,34 - 524,07	-	-	-
MR375	5	488,82 - 1561,78	488,82 - 1561,78	488,82 - 1561,78	488,82 - 1561,78	-	-	-
MR376	6	1217,14 - 4945,64	1217,14 - 4945,64	1217,14 - 4945,64	1217,14 - 4945,64	-	-	-
MR472	2	-	-	18,72 - 22,15	18,72 - 22,15	4,89 ; 8,47 - 22,15	4,89 ; 8,47 - 22,15	3,27 - 22,15
MR473	3	-	-	86,52 - 219,00	86,52 - 219,00	21,74 ; 30,93 - 157,90	18,04 - 139,54	18,04 - 109,64
MR474	4	-	229,46 - 674,46	229,46 - 674,46	229,46 - 674,46	229,46 - 295,98	229,46 - 259,55	-
MR475	5	726,85 - 2522,85	726,85 - 2522,85	726,85 - 2522,85	726,85 - 2522,85	726,85 - 1631,08	726,85 - 1386,75	-
MR476	6	2148,94 - 7458,85	2148,94 - 7458,85	2148,94 - 7458,85	2148,94 - 7458,85	2148,94 - 5141,34	2148,94 - 4822,33	-
MR572	2	-	-	-	-	17,07 - 27,00	17,07 - 27,00	4,95 - 27,00
MR573	3	-	-	-	-	26,54 - 167,32	22,64 - 134,45	22,64 - 118,95
MR574	4	-	144,37 - 574,90	144,37 - 574,90	144,37 - 574,90	144,37 - 402,12	144,37 - 194,15 301,59	144,37
MR575	5	620,62 - 2736,94	620,62 - 2736,94	620,62 - 2736,94	620,62 - 2736,94	-	-	-
MR576	6	2850,22 - 8091,82	2850,22 - 8091,82	2850,22 - 8091,82	2850,22 - 8091,82	-	-	-
MR672	2	-	-	-	-	-	20,74 - 23,18	5,08 - 5,73 10,62 - 23,18
MR673	3	-	-	-	-	-	110,55 - 196,61	30,20 - 174,89
MR674	4	-	-	-	215,97 - 500,39	215,97 - 500,39	215,97 - 442,20	-
MR675	5	-	730,46 - 2578,93	730,46 - 2578,93	730,46 - 2578,93	583,04 - 2578,93	583,04 - 1113,08	583,04 - 995,91
MR676	6	-	2863,86 - 17441,07	2863,86 - 17441,07	2863,86 - 17441,07	2863,86 - 7490,08	2863,86 - 5287,12	2863,86 - 3931,45
MR772	2	-	-	-	-	-	-	7,26 12,98 - 21,40
MR773	3	-	-	-	-	-	-	17,53 - 19,76 ; 34,89 - 39,33 68,15 - 208,82
MR774	4	-	-	-	190,96 - 594,92	190,96 - 594,92	190,96 - 594,92	190,96 - 467.43
MR775	5		641,40 - 4812,09	641,40 - 4812,09	641,40 - 4812,09	641,40 - 3103,85	641,40 822,02 - 1252,60	822,02 - 984,18
MR776	6		2916,59 - 23464,25	2916,59 - 23464,25	2916,59 - 23464,25	2916,59 - 8428,93	2916,59 - 5949,83	2916,59 - 4424,24
MR872	2	-	-	-	-	-	-	-
MR873	3	-	-	-	-	-	-	56,54 - 110,17
MR874	4	-	-	-	-	188,08 - 446,42	188,08 - 390,74	107,60 - 345,67
MR875	5	-	537,75 - 1924,32	537,75 - 1924,32	537,75 - 1924,32	495,97 - 1924,32	495,97 - 1700,56	495,97 - 1336,15
MR876	6	-	2108,33 - 17501,59	2108,33 - 13014,00	2108,33 - 13014,00	2108,33 - 11443,34	2108,33 - 3892,30	2108,33 - 2894,28
MR972	2	-	-	-	-	-	-	-
MR973	3	-	-	-	-	-	-	-
MR974	4	-	-	-	-	172,08 - 510,11	172,08 - 510,11	172,08 - 510,11
MR975	5	-	-	914,74 - 2027,97	914,74 - 2027,97	588,87 - 2027,97	588,87 - 2027,97	462,18 - 2027,97
MR976	6	-	-	2836,64 - 20051,59	2836,64 - 20051,59	2836,64 - 11064,86	2836,64 - 8620,11	2836,64 - 5357,43

		Motor Size						
Type	Stages	160	180	200	225	250	280	315
MR002	2	-	-	-	-	-	-	-
MR003	3	-	-	-	-	-	-	-
MR102	2	-	-	-	-	-	-	-
MR103	3	-	-	-	-	-	-	-
MR172	2	-	-	-	-	-	-	-
MR173	3	-	-	-	-	-	-	-
MR202	2	-	-	-	-	-	-	-
MR203	3	-	-	-	-	-	-	-
MR272	2	-	-	-	-	-	-	-
MR273	3	-	-	-	-	-	-	-
MR275	5	-	-	-	-	-	-	-
MR276	6	-	-	-	-	-	-	-
MR282	2	-	-	-	-	-	-	-
MR283	3	-	-	-	-	-	-	-
MR284	4	-	-	-	-	-	-	-
MR285	5	-	-	-	-	-	-	-
MR286	6	-	-	-	-	-	-	-
MR372	2	3,28 - 13,53	-	-	-	-	-	-
MR373	3	21,65 - 25,27 35,25 - 41,16	-	-	-	-	-	-
MR374	4	-	-	-	-	-	-	-
MR375	5	-	-	-	-	-	-	-
MR376	6	-	-	-	-	-	-	-
MR472	2	3,27 - 18,72	3,27 - 15,35	-	-	-	-	-
MR473	3	18,04 - 84,46 ; 91,58	18,04 - 73,09	-	-	-	-	-
MR474	4	-	-	-	-	-	-	-
MR475	5	-	-	-	-	-	-	-
MR476	6	-	-	-	-	-	-	-
MR572	2	4,37 - 23,02	4,37 - 19,15	4,37 - 14,54	-	-	-	-
MR573	3	22,64 - 100,53	22,64 - 39,98 54,74 - 82,45	-	-	-	-	-
MR574	4	-	-	-	-	-	-	-
MR575	5	-	-	-	-	-	-	-
MR576	6	-	-	-	-	-	-	-
MR672	2	3,29 - 23,18	3,29 - 23,18	3,29 - 17,93	3,29 - 11,97	-	-	-
MR673	3	26,66 - 149,11	26,66 - 124,07	26,66 - 94,17	26,66 - 34,36 53,99 - 61,42	-	-	-
MR674	4	-	-	-	-	-	-	-
MR675	5	583,04 - 673,70	-	-	-	-	-	-
MR676	6	-	-	-	-	-	-	-
MR772	2	4,73 - 21,40	4,73 - 21,40	4,73 - 21,40	4,73 - 14,54	4,73 - 14,54	-	-
MR773	3	15,63 - 178,78	15,63 - 148,73	15,63 - 115,06	15,63 - 76,81	15,63 - 76,81	-	-
MR774	4	-	-	-	-	-	-	-
MR775	5	-	-	-	-	-	-	-
MR776	6	-	-	-	-	-	-	-
MR872	2	4,95 ; 5,99 - 10,09	4,95 ; 5,99 - 10,09	4,32 - 10,09	4,32 - 10,09	4,32 - 10,09	4,32 - 10,09	-
MR873	3	13,30 ; 16,09 - 20,28 27,39 - 110,17	13,30 ; 16,09 - 20,28 27,39 - 110,17	11,59 - 86,51	11,59 - 52,86	11,59 - 52,86	11,59 - 46,12	-
MR874	4	107,60 - 292,15	107,60 - 239,61	107,60 - 174,68	-	-	-	-
MR875	5	495,97 - 537,75	-	-	-	-	-	-
MR876	6	-	-	-	-	-	-	-
MR972	2	7,92 - 9,99 ; 12,86 - 16,23	7,92 - 9,99 ; 12,86 - 16,23	7,11 - 16,23	7,11 - 16,23	7,11 - 16,23	7,11 - 16,23	7,11 - 16,23
MR973	3	20,36 - 26,03 ; 33,08 - 42,30 54,80 - 186,95	20,36 - 26,03 ; 33,08 - 42,30 54,80 - 166,73	18,15 - 132,83	18,15 - 91,56	18,15 - 91,56	18,15 - 70,07	18,15 - 70,07
MR974	4	172,08 - 216,03	172,08 - 193,13	-	-	-	-	-
MR975	5	462,18 - 842,80	462,18 - 750,24	-	-	-	-	-
MR976	6	-	-	-	-	-	-	-

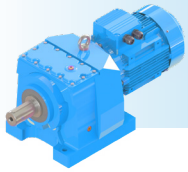

Service Factor

Service Factor (f_s) is a safety coefficient, which takes into account the different running conditions of the driven machine. ''f_s=1'' is used for uniform loads 8 hours working per day and up to 100 starts per hour.

Service factor depends on:

- Running time
- Nature of load
- Frequency of starting
- Driver type
- Other considerations

For the right selection of the needed service factor for your machine:

1. Determine the running time of driven machine.

2. Select the nature of load of driven machine (Page 15).

U - Uniform loads
M - Moderate loads
H - Heavy shock loads

For a better selection, the nature of load can be calculated from the formulas given (page 15).

3. Determine frequency of starting

4. After determining the above mentioned factors, the service factor can be easily selected from the table given bellow.

5. The selected service factor must be multiplied with the factor ''k'' according to the driver type;

k=1 :Electric motor or Hydrolicmotor
k=1.25 :Multicylinder internal combustion engine
k=1.5 :Single cylinder internal combustion engine

Operating Time hour / Day

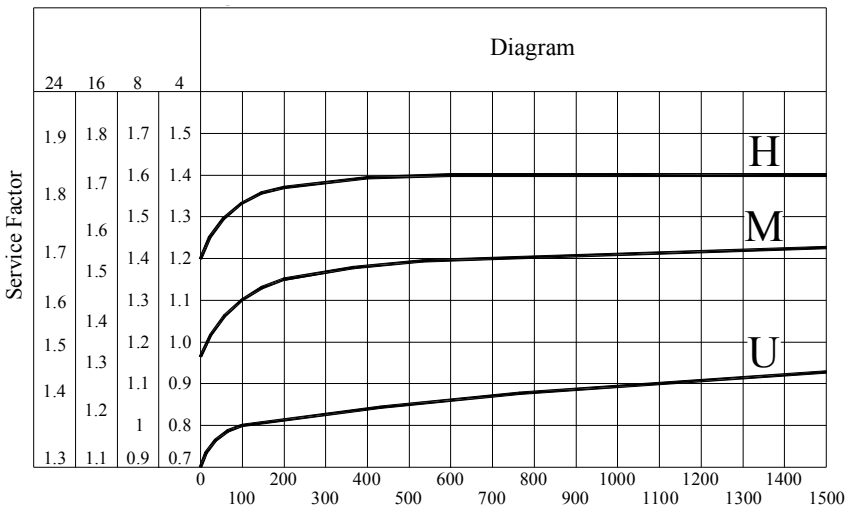

Cycle / Hour

Load Classification

Cranes:

U - Hoist Gears
- Lifting Gears

M - Defrocking jib Gears
- Slowing Gears

H - Travelling Gears

Pumps:

U - Centrifugal Pumps (light liquids)

M - Centrifugal Pumps (semi liquid)

H - Pressure Pumps
- Plunger Pumps

Stone and Clay Working Machines:

H - Hammer Mills
- Rotary Kilns
- Beater Mills
- Breakers
- Ball Mills
- Brick Presses
- Tup Mills

Textile Machines:

M - Printing and Dyeing Machines
- Looms
- Willow
- Batchers
- Tanning Vats

Oil Industry:

M - Pipeline Pumps
- Rotary Drilling Equipment

Food Industry:

M - Cane Knives
- Cane Crushers
- Mach Tubs

H - Cane Mills

Laundries:

M - Tumblers
- Washing Machines
- Bulk Belt Conveyors

Metal Rolling Mills:

M - Roller Adjustment Drives
- Roller Straightened
- Winding Machines
- Wire Drawing Benches

H - Billet Shears
- Rotary Tables (heavy)
- Descaling Machines,
- Sheet Mills
- Manipulators
- Cold Rolling Mills

Building Machines:

M - Concreate Mixers
- Hoist

Paper Machines:

H - Wet Presses
- Pulpers
- Drying Cylinders
- Glazing Cylinders

Rubber Machinery:

M - Calenders
- Mixers

H - Extruders
- Pug Mills
- Rolling Mills

Chemical Ind.:

M - Aggidators (semi- liquit)
- Drying Drums.
- Mixers and Rolling Mills

Conveyors:

M - Band Pocket Conveyors
- Steel Belt Conveyors
- Belt Conveyors

H - Hoists
- Bulk Belt Conveyors

U	Uniform Loads	$F_i < 0,25$
M	Moderate Loads	$F_i < 3$
H	Heavy Shock Loads	$F_i < 10$

J_{ext} : External moments of inertia reduced to the motor shaft

$$J'_{ext} = \frac{J_{ext}}{i^2}$$

i : Transmission ratio

J_{rotor} : Moments of inertia to the motor

$$F_i = \frac{J'_{ext}}{J_{rotor}}$$

Direction of Rotation

M Series direction of rotation of Dana products are defined as follows. The definitions are also valid for gear units with backstop.

	2-4-6 Stages	3-5 Stages
Clockwise **CW**	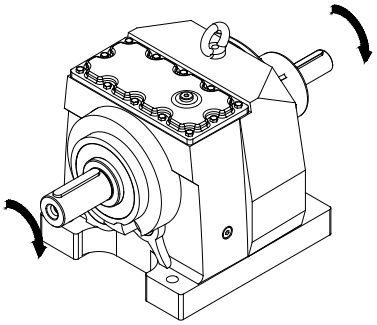	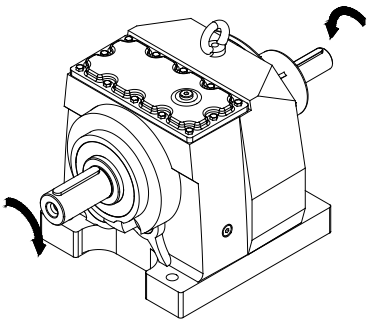
Counter Clockwise **CCW**	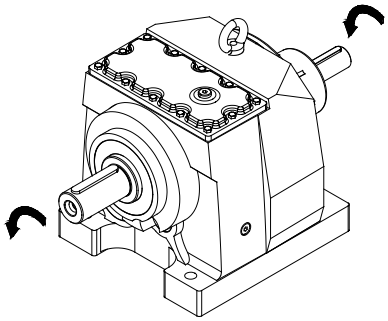	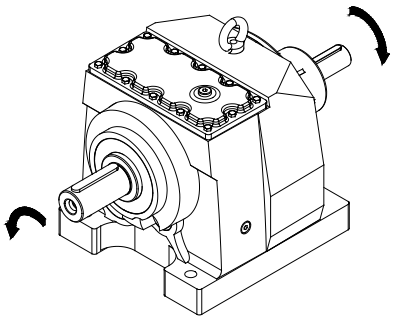

Output shaft rotation directions according to the input shaft rotation directions are as follows.

2-4-6 Stages	3-5 Stages
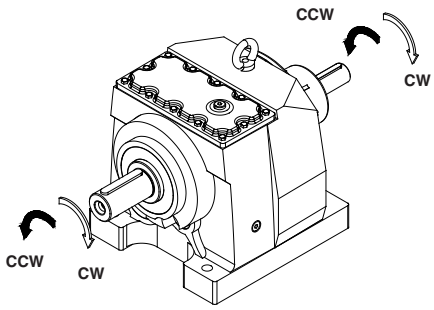	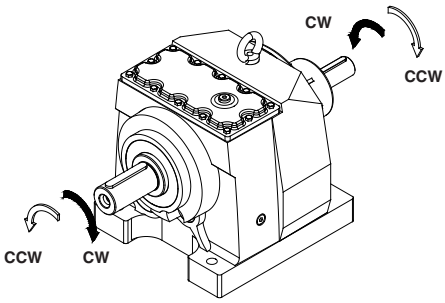

Radial Loads

The permissible radial loads are calculated by considering working life and is listed on the tables. The given permissible radial loads F_{qam} are based on safety factor 1 and are valid for forces which are applied to the midpoint of the shaft.
For shock loading (f_s=1) permissible radial loads must be divided with service factor.
The listed permissible radial loads are based on the worst loading direction. Higher radial loads can be applied for different loading directions (Please ask if requested). The effective radial load at the gearbox shaft F_q will be determined with the given formulas on page 18.

In Selection:

$$F_{qa} \leq F_{qam}$$
$$F_{qe} \leq F_{qem}$$

these formulas must be taken into consideration.

If the load is not applied at the midpoint of the shaft; the given permissible load must be corrected with the following formulas.

$$F_{qam}' = F_{qam} \frac{t}{y+u}$$
$$F_{qem}' = F_{qem} \frac{t}{y+u}$$

The values “t”,”y” can be taken from the below table. The value “u” is the length of the application point as shown below.

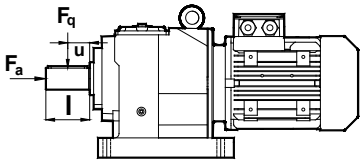

Radial Load Correcting Values on Output Shaft													
Type	MR002-003 NR002-003	MR102-103 NR102-103	MR172-173 NR172-173	MR202-203 NR202-203	MR272-273 NR272-273	MR282-283 NR282-283	MR372-373 NR372-373	MR472-473 NR472-473	MR572-573 NR572-573	MR672-673 NR672-673	MR772-773 NR772-773	MR872-873 NR872-873	MR972-973 NR972-973
t	90	108	109	140	141	158	170	214	256	291	314	404	440
y	70	83	84	110	106	123	130	164	196	226	244	299	334
l	40	50	50	60	70	70	80	100	120	130	140	210	210

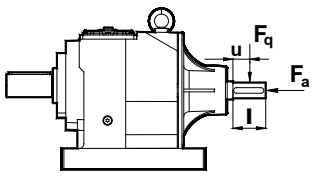

Radial Load Correcting Values on Input Shaft													
Type	MT002-003 NT002-003	MT102-103 NT102-103	MT172-173 NT172-173	MT202-203 NT202-203	MT272-273 NT272-273	MT282-283 NT282-283	MT372-373 NT372-373	MT472-473 NT472-473	MT572-573 NT572-573	MT672-673 NT672-673	MT772-773 NT772-773	MT872-873 NT872-873	MT972-973 NT972-973
t	78	108	108	111	111	126	126	137	158	180	207	220	261
y	58	83	83	86	86	96	96	102	113	130	147	165	207
l	40	50	50	50	50	60	60	70	90	100	120	110	110

Calcolation of Radial Loads

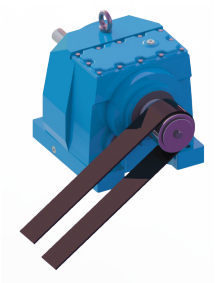

Radial Load F_q (N) is calculated with the following equations where required moment M (Nm) and hoop or gear diameter D (mm) is used.

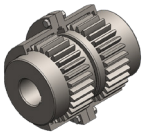

1. Elastic Coupling

If Elastic Coupling is working in its relaible working area, the radial loads can be neglected.

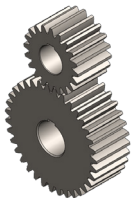

2. For Spur Gear

(Pressure angle 20°)

$$F_q = \frac{2100 \times M_2}{D}$$

3. For Chain Drive

With Low Speed (z>17)

$$F_q = \frac{2100 \times M_2}{D}$$

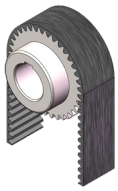

4. For Trigger Belt

$$F_q = \frac{2500 \times M_2}{D}$$

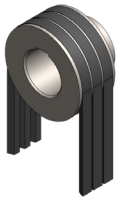

5. For V Belt

$$F_q = \frac{5000 \times M_2}{D}$$

6. Flat Belt With

Spanning Pulley

$$F_q = \frac{5000 \times M_2}{D}$$

Equivalent Power Rating

The equivalent power by an equivalent constant torque can be calculated for gearboxes working in constant speed but variable torques (or powers).
Using this equivalent power it is possible to make a gearbox selection according the usual gearbox selection method with constant torques. The equivalent torque will be determined according the mean of dominating torques.
The gearbox working in constant equivalent torque will theoretically have the same lifetime and safety compared to the variable torque one.
To calculate the equivalent torques, the variable torques in a cycle must be sorted from the maximal to the minimal on a horizontal time line (Check the graphic below). According to the graphic below the equivalent torque can be calculated with the following formula;

$$T_e = \left(\frac{\Delta t_1 \times T_1^{6.6} + \ldots + \Delta t_n \times T_n^{6.6}}{t}\right)^{\left(\frac{1}{6.6}\right)}$$

If T_n (the lowest torque) is lower than 50 % of T_e, this torque part must be taken out of the torque graph and the calculation must be repeated;

If $T_n < T_e \times 0.5$ then

$$T_e = \left(\frac{\Delta t_1 \times T_1^{6.6} + \ldots + \Delta t_{n-1} \times T_{n-1}^{6.6}}{t - \Delta t_n}\right)^{\left(\frac{1}{6.6}\right)}$$

If all T_n values are higher then 50% of T_e then the equivalent power can be calculated by the following formula;

$$P_{eq} = P_N = \frac{T_e \times n}{9550}$$

After the equivalent power is determined the selection of gearbox is made according to the selection procedures given on the gearbox selection part in this catalogue.

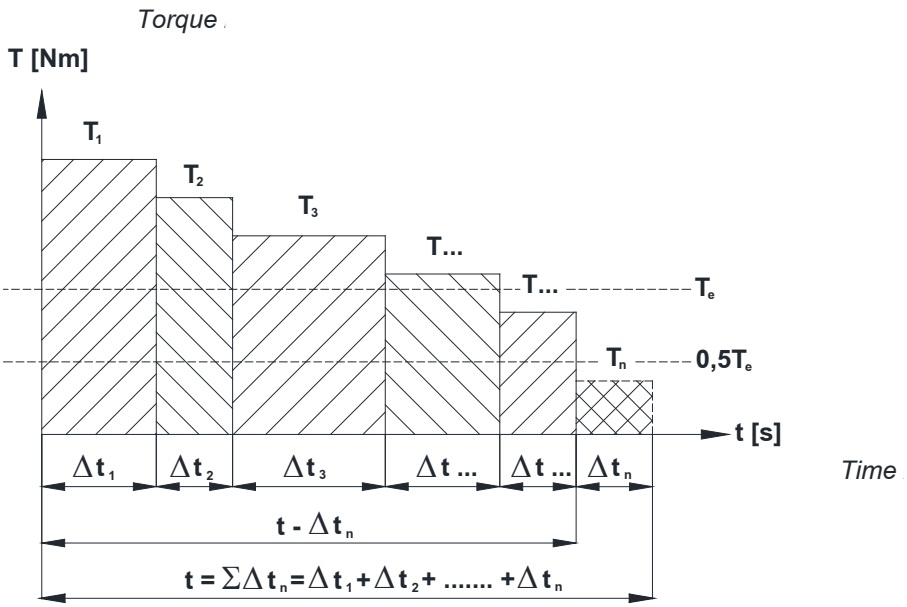

Equivalent Power Rating Example

The following data is given for a reversing blooming mill;

Torque steps:

Total one cycle time:	2 min.
1st torque part:	48 kNm, 30 s
2nd torque part:	32 kNm, 22 s
3th torque part:	28 kNm, 15 s
4th torque part:	16 kNm, 10 s
5th torque part:	5 kNm, 43 s
Machine constant speed:	50 rpm

The equivalent power, which is required for gear unit selection, is to determine.

Solution:

Total time in a cycle;

$$t = t_1 + t_2 + t_3 + t_4 + t_5 = 120 \text{ sn}$$

Equivalent Torque;

$$T_e = \left(\frac{30 \times 48^{6.6} + ... + 43 \times 5^{6.6}}{67}\right)^{\left(\frac{1}{6.6}\right)} = 39{,}2 \text{ kNm}$$

50% of Equivalent torque;

$$0{,}5 \times T_e = 19{,}6 \text{ kNm}$$

Every torque part must be lower then this value;

$$T_{4,5} < 0{,}5 \times T_e$$

We are repeating the calculation by taking out the torque parts, which are below 50%;

$$t' = t_1 - t_4 - t_5 = 120 - 43 - 10 = 67\text{s}$$

$$T_e = \left(\frac{30 \times 48^{6.6} + 22 \times 32^{6.6} + 15 \times 28^{6.6}}{67}\right)^{\left(\frac{1}{6.6}\right)} = 42{,}9 \text{ kNm}$$

By using the equivalent torque and constant speed we calculate the equivalent power;

$$P_{eq} = \frac{T_e \times n}{9550} = \frac{42{,}9 \times 1000 \times 50}{9550} = 225\text{kW}$$

Now by using the above calculated equivalent power and constant speed we camake the gearbox selection with the procedures described in this catalogue.

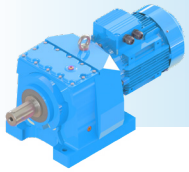

Gearbox Selection

For the correct selection of the appropriate gear units follow this steps.

1.Determine service factor (fs) on the basis of running conditions (Page 14).
2. Determine the required Torque M_2 (required output torque of gearbox) for the driven machine.
3. Determine required speed (output speedof gearbox) for the driven machine.
4. Calculate the required power for your machine(Calculate power ''P_2'' required at output side of gear reducer using the formula);

$$P_2 = \frac{M_2 \times n_2}{9550}$$

5. Calculate radial load required at output shaft according to type of connection between gear unit and machine (Refer to directions and values given on page 17).
After determining the above mentioned values, the gear reducer which corresponds to our requirements can be selected from the performance tables (the service factor and the permissible radial load should be less than or equal to our requirement).
For Helical gears the output power is not given on the performance tables because they have high efficiency and the output power can be taken as input power.
The output torque should be checked if it meets to our requirements. If the output torque is low, search for a higher input power gearbox.

Example:
1. Machine Type: Belt Conveyor (Bulk Load)
2. Required Torque: Required Torque calculated for the driven machine is M_2 = 470 Nm.
3. Required speed: n_2 = 50 rpm
4. Running time: 16 hours per day
5. Frequency of starting: 1 start per hour
6. Connection type between gear reducer: Chain drive (output dimension-180 mm)

- From the load classification table (on page 14-15), the load class M can be selected for the known application.
- The service factor can be selected as fs =1,3 from the service factor table (page 14) by taking into consideration 16 hours running time, one start per hour, and load class M.

-Required power for your machine(Power at output side of gear reducer) :

$$P_2 = \frac{M_2 \times n_2}{9550} = \frac{470 \times 50}{9550} = 2,46\,kW$$

- For chain drive application the requested overhang load can be calculated from (page 18).

$$F_q = \frac{2100 \times M_2}{D} = \frac{2100 \times 470}{180} = 5484\ N$$

- The required gearbox is as follows:

$P_2 \geq$ 2,46 kW
$M_2 \geq$ 470 Nm
fs $\geq$ 1.3
n_2 = 50 rpm
F_q $\geq$ 5484 N

From the performance table,

MR373-3E100L/4D selected. (Page 73)

P_2=3kW > 2,46 kW
M_2= 554 Nm > 470 Nm
fs=1,4
n_2=49 rpm
F_{qam}= 6587 N > 5484 N

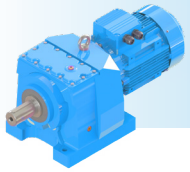

GEARBOX SELECTION FORM

Field of Industry.....
Application.....
Required Average Speed..... rpm

Required Power on Driven Machine:
-Normal..... kW
-Maximum..... kW
-Minimum..... kW

Driving Machine:
AC Motor [ ]
AC Motor + Inverter [ ]
DC Motor [ ]
Hydraulic Motor [ ]
Piston Engine with 1-3 cylinder [ ]
Piston Engine with 4-24 cylinder [ ]

Motor Connection Type (Electric Motors):
IEC B5 Flange [ ]
NEMA Flange [ ]
B3 Foot Mounted [ ]

IEC or NEMA Flange Code.....

Motor Power:
-Nominal.....kW

Motor Speed:
-Normal.....rpm
-Maximum.....rpm
-Minimum.....rpm

Motor Torque:
-Normal.....Nm
-Maximum.....Nm
-Minimum.....Nm

Direction of Rotation:
cw [ ] ccw [ ] variable [ ]

Working hours per day:
<4 [ ] 4-8 [ ] 8-16 [ ] >16 [ ]

Startings per cycle:
0-50 [ ] 50-100 [ ] 100-200 [ ]
200-300 [ ] 300-500 [ ] 500-700 [ ]
700-1000 [ ] >1000 [ ]

Transmission ratio between motor and gear unit.....

Required Starting Torque.....Nm

Peak torques per hour:
1-5 [ ] 6-30 [ ] 31-100 [ ] >100 [ ]

Effective working time in a cycle (ED):
%100 [ ] %80 [ ] %60 [ ] 40% [ ]
20%[ ]

Altitude:
<1000 [ ] <2000 [ ] <3000 [ ]
<4000 [ ] <5000 [ ]

Mounting Place:
Small closed room (w<1m/sn) [ ]
Closed room (w<3m/sn) [ ]
Big rooms and halls (w>=3m/sn) [ ]
Outdoor [ ]

Ambient Conditions:
Normal [ ] Dusty [ ] Humid [ ]
Corrosive [ ] Dry [ ]

Ambient Temperature:
Average.....^{0}C
Maximum.....^{0}C
Minimum.....^{0}C

Backstop Required:
Yes [ ] No [ ]

Gearbox input options:
R..[ ] V..[ ] N..[ ] T..[ ]

Mounting Position:
M1 [ ] M2 [ ] M3 [ ] M4 [ ] M5 [ ] M6 [ ]

Input Shaft Connection Type:
Elastic Coupling [ ]
Barrel Type Coupling [ ]
Hydraulic Coupling [ ]
Rigid Flange Coupling [ ]
Pulley [ ]
Chain Sprocket [ ]
Pinion [ ]
Diameter of Connection element.....mm
Radial Load.....N
"u" Distance of Radial Load.....
mm
Axial Load (Towards Shaft) .....N

Output Shaft Connection Type:
Elastic Coupling [ ]
Barrel Type Coupling [ ]
Rigid Flange Coupling [ ]
Pulley [ ]
Chain Sprocket [ ]
Pinion [ ]
Diameter of Connection Element.....mm
Radial Load.....N
"u" Distance of Radial Load.....
mm
Axial Load (Towards Shaft) .....N

Output Shaft Specification:
Solid Shaft with Keyway [ ]
Solid Shaft without Keyway [ ]
Special Shaft [ ]

Input Shaft Specification:
Solid Shaft with Keyway [ ]
Solid Shaft without Keyway [ ]
Special Shaft [ ]

Electrical Supply:
AC-1 Phase [ ] AC-3 Phase [ ] DC [ ]
Voltage.....Volt
Frequency..... Hz

Protection Class:
IP55 [ ] IP65 [ ] Exproof [ ]
Other IP.....

Attachments:
Load Diagram [ ]
Project [ ]
Required Dimensions [ ]
Technical Specifications [ ]

Notes:

Lubrication

To work in perfect condition and to have long life for the gear box the lubricant must be chosen correctly and changed in time.

In selection of oil it is important to consider speed, ambient temperature, gear box oil temperature, working conditions and the life required from the lubricant. All units are filled with lubricant before shipping. Before the gearbox is stored for a long time or before starting up, the top plug (according to the working position) must be removed and the extra given vent plug must be replaced. This prevents excessive pressure which causes oil leakages.

The lubricants for standard gear units are given on the table on p. 24. Please look at your gear units label for filled oil type and quantity. If it is not written on the gearbox selection form, the M type gearboxes are filled for mounting position of **M1**
and N type gearboxes are filled for mounting position **M4**. For other mounting positions please refer to the table given on the next pages. For special working conditions please contact us.

The mineral lubricant should be changed after every 10.000 service hours and the synthetic lubricant should be changed after every 20.000 working hours.
If the operation conditions are very heavy (e.g. high temperature differences, high humidity) shorter intervals between changes are recommended.
Mineral and synthetic oils must not be mixed up. By changing the lubricant complete cleaning is advised.
The oil change should be done after a working period. Because oil is hot in this condition and impurities are mixed with it the changing of oil will be done in best result and the oil will drain easily.

Expansion Tank for M4 Mounting Position

As you can see at the technical drawing below, for gear units with **M4** (mounting positions p. 25) mounting position, oil level is very high for proper lubrication of upper pinion gear and this leads to oil leakage from venting plug, because of foaming and expansion of oil at geared motors with ratios below 20.
We ; Dana, strongly recommend using expansion tank for **M4** mounting position for gear units M57, M67, M77, M87 and M97 with total ratios (i) below 20, to prevent this. You can find the recommended dimensions of expansion tanks below.
If your gear units total ratio (i) is below 20 and input speed is higher then 1800 rpm we recommend using of expansion tank for all gear unit sizes for **M4** mounting position.

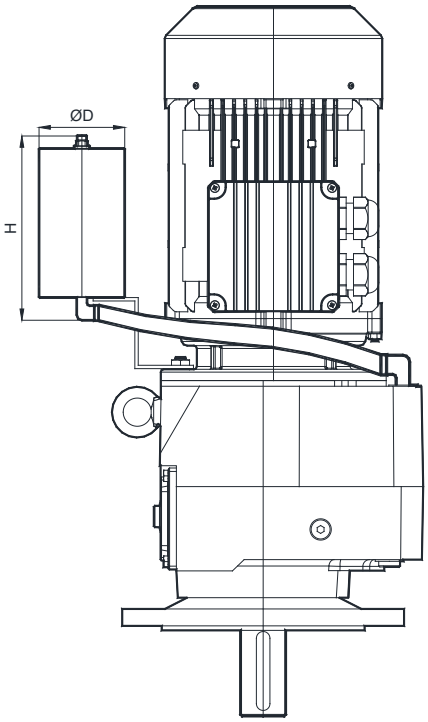

Housing Size	Expansion Tank	D [mm]	H [mm]	Weight [kg]
M57..	G1	100	150	4
M67.. , M77..	G2	150	250	5
M87.. , M97..	G3	180	400	9

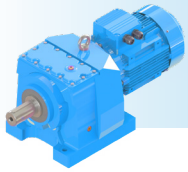

GENERAL INFORMATIONS

Oil Types

Lubricant	DIN 51517-3	Ambient Temperature (°C)		ISO VG	Aral	Beyond Petroleum	Castrol	Klüber Lubrication	Mobil	Shell	Total
		Dip Lubrication	Forced								
Mineral Oil	CLP	0 ... +50	–	680	Degol BG 680	Energol GR-XP 680	Alpha SP 680	Klüberoil GEM 1-680 N	Mobilgear 600 XP 680	Omala S2 GX 680	Carter EP 680
		-5 ... +45	–	460	Degol BG 460	Energol GR-XP 460	Alpha SP 460	Klüberoil GEM 1-460 N	Mobilgear 600 XP 460	Omala S2 GX 460	Carter EP 460
		-10 ... +40	+15 ... +40	320	Degol BG 320	Energol GR-XP 320	Alpha SP 320	Klüberoil GEM 1-320 N	Mobilgear 600 XP 320	Omala S2 GX 320	Carter EP 320
		-15 ... +30	+10 ... +30	220	Degol BG 220	Energol GR-XP 220	Alpha SP 220	Klüberoil GEM 1-220 N	Mobilgear 600 XP 220	Omala S2 GX 220	Carter EP 220
		-20 ... +20	+5 ... +20	150	Degol BG 150	Energol GR-XP 150	Alpha SP 150	Klüberoil GEM 1-150 N	Mobilgear 600 XP 150	Omala S2 GX 150	Carter EP 150
		-25... +10	+3 ... +10	100	Degol BG 100	Energol GR-XP 100	Alpha SP 100	Klüberoil GEM 1-100 N	Mobilgear 600 XP 100	Omala S2 GX 100	Carter EP 100
Synthetic Oil	CLP PG	-10 ... +60	–	680	Degol GS 680	Energsyn SG-XP 680	–	Klübersynth GH 6 -680	Mobil Glygoyle 680	Omala S4 WE 680	Carter SY 680
		-20 ... +50	–	460	Degol GS 460	Energsyn SG-XP 460	Aphasyn PG 460	Klübersynth GH 6 -460	Mobil Glygoyle 460	Omala S4 WE 460	Carter SY 460
		-25 ... +40	+5 ... +40	320	Degol GS 320	Energsyn SG-XP 320	Aphasyn PG 320	Klübersynth GH 6 -320	Mobil Glygoyle 320	Omala S4 WE 320	Carter SY 320
		-30 ...+30	0 ...+30	220	Degol GS 220	Energsyn SG-XP 220	Aphasyn PG 220	Klübersynth GH 6 -220	Mobil Glygoyle 30	Omala S4 WE 220	Carter SY 220
		-35 ... +20	-5 ... +20	150	Degol GS 150	Energsyn SG-XP 150	Aphasyn PG 150	Klübersynth GH 6 -150	Mobil Glygoyle 22	Omala S4 WE 150	Carter SY 150
		-40 ... +10	-8 ... +10	100	–	–	–	Klübersynth GH 6 -100	Mobil Glygoyle 100	–	–
	CLP HC	-10 ... +60	–	680	–	–	–	Klübersynth GEM 4-680 N	Mobil SHC Gear 680	Omala S4 GXV 680	Carter SH 680
		-20 ... +50	–	460	Degol PAS 460	Enersyn EP-XF 460	Alphasyn T 460	Klübersynth GEM 4-460 N	Mobil SHC Gear 460	Omala S4 GXV 460	Carter SH 460
		-30 ... +40	+5 ... +40	320	Degol PAS 320	Enersyn EP-XF 320	Alphasyn T 320	Klübersynth GEM 4-320 N	Mobil SHC Gear 320	Omala S4 GXV 320	Carter SH 320
		-40 ... +40	0 ...+30	220	Degol PAS 220	Enersyn EP-XF 220	Alphasyn T 220	Klübersynth GEM 4-220 N	Mobil SHC Gear 220	Omala S4 GXV 220	Carter SH 220
		-40 ... +40	-5 ... +20	150	Degol PAS 150	Enersyn EP-XF 150	Alphasyn T 150	Klübersynth GEM 4-150 N	Mobil SHC Gear 150	Omala S4 GXV 150	Carter SH 150
		-40 ... +40	-8 ... +10	100	–	–	–	Klübersynth GEM 4-100 N	Mobil SHC 627	Omala S4 GXV 100	–
Food Grade Oil	CLP NSF H1	-30 ... +25	+5 ... +25	220	–	–	Optileb GT 220	Klüberoil 4 UH1-220 N	Mobil SHC Cibus 220	Cassida Fluid GL-220	Nevastane SL 220
Biodegradable Oil	CLP E	-25 ... +40	+5 ... +40	320	–	–	Tribol BioTop 1418-320	Klübersynth GEM 2-320	–	–	Carter Bio 320
Mineral Grease [-20 .... +120 °C Working Temperature]					Aralub HL3	Energrease LS 3	Spheerol AP3	Centoplex 2 EP	Mobilux EP 3	Gadus S2 V100 3	Multis Complex EP 2
Synthetic Grease [-30 .... +100 °C Working Temperature]					–	Energrease SY 2202	–	Petamo GHY 133 N	Mobiltemp SHC 100	Gadus S5 V100 2	Multis Complex SHD 220

Mounting Positions

M Series

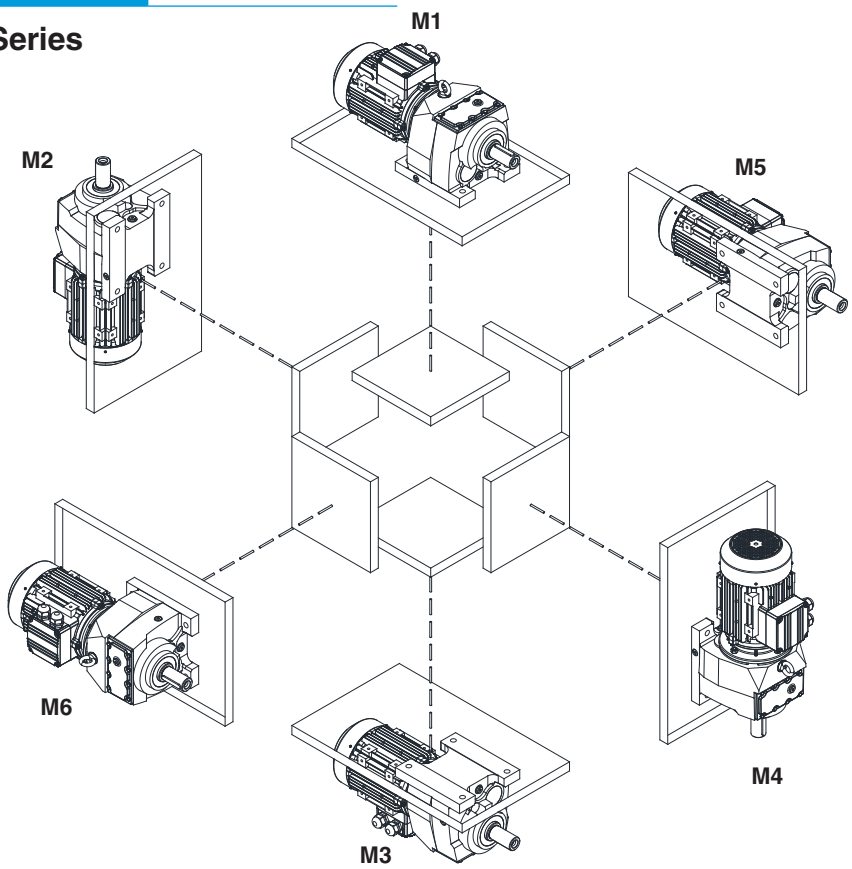

Figured mounting positions of M1 to M6 are determined as reference of directional position of the gearbox. Mounting surfaces are not binding.

N Series

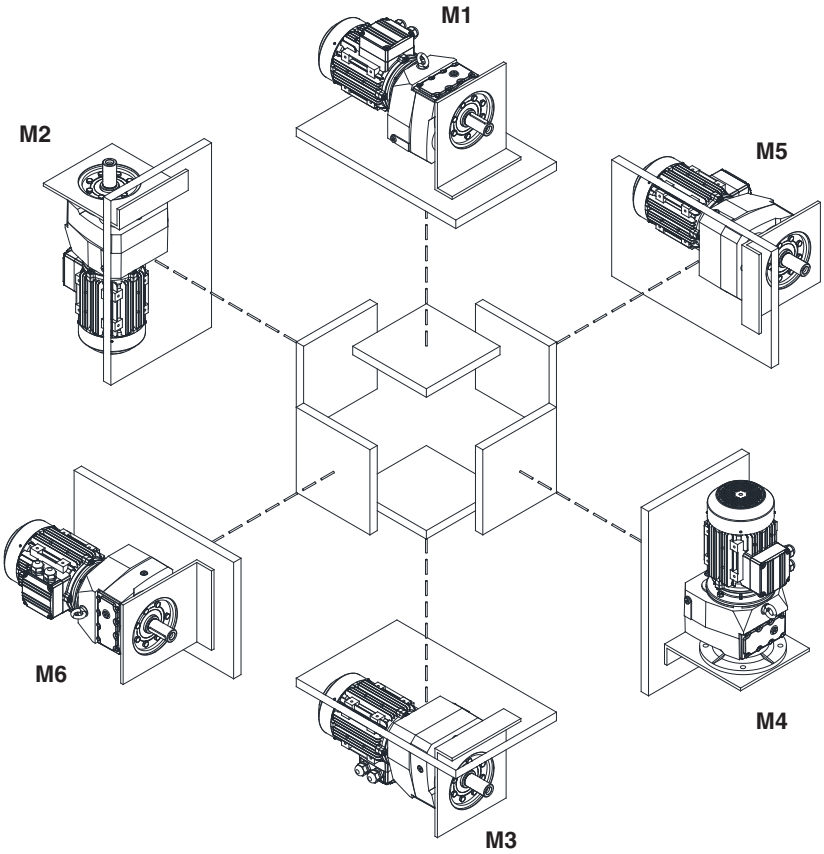

Figured mounting positions of M1 to M6 are determined as reference of directional position of the gearbox. Mounting surfaces are not binding.

M Series 2 - 3 Stage Helical Gearboxes Oil Level Plugs and Oil Quantities

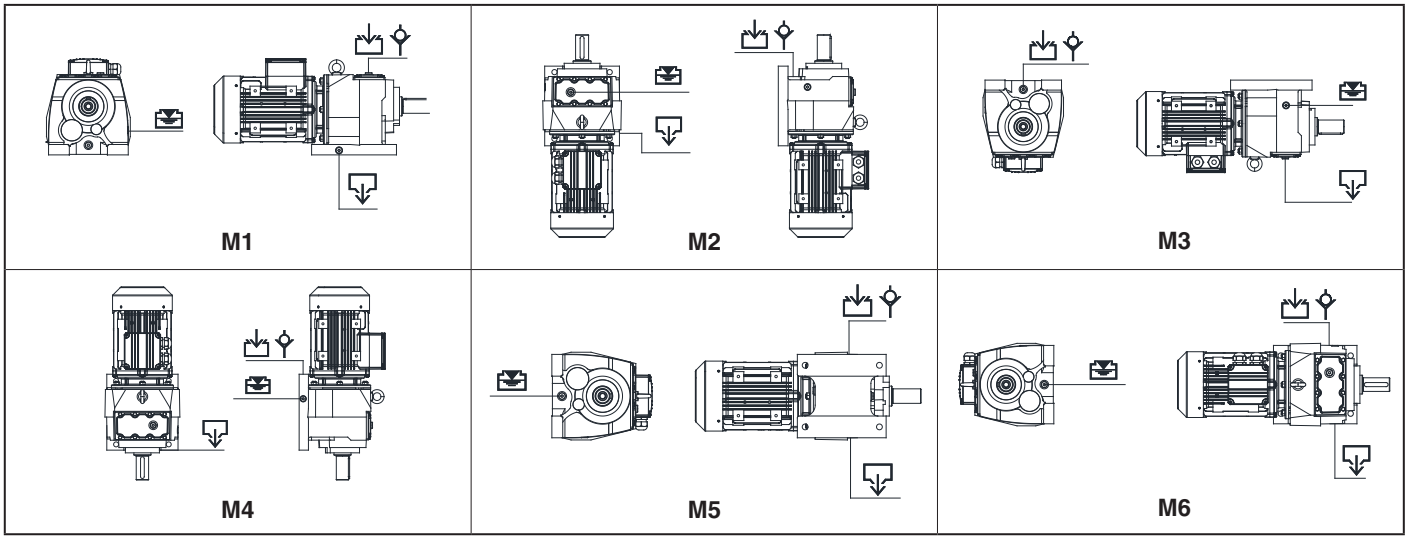

Oil Quantities (lt)

Type	M Series 2-3 Stages Oil Quantities					
	M1	M2	M3	M4	M5	M6
M002 / 003	0.4 / 0.35	0.6 / 0.55	0.5 / 0.5	0.6 / 0.55	0.5 / 0.4	0.5 / 0.4
M102 / 103	0.65 / 0.6	0.95 / 0.8	0.7 / 0.7	0.95 / 0.8	0.7 / 0.7	0.7 / 0.7
M172 / 173	0.7 / 0.65	0.95 / 0.9	0.8 / 0.8	0.95 / 0.9	0.8 / 0.7	0.8 / 0.7
M202 / 203	1.2 / 1.1	2.1 / 2	2 / 1.9	2.1 / 2	1.4 / 1.3	1.4 / 1.3
M272 / 273	1.1 / 1	2 / 1.7	1.9 / 1.5	2 / 1.7	1.3 / 1.2	1.3 / 1.2
M282 / 283	1.7 / 1.6	3 / 2.85	2.8 / 2.5	3 / 2.85	2.6 / 2.4	2.6 / 2.4
M372 / 373	2 / 1.9	3.4 / 3.3	3.1 / 3	3.4 / 3.3	2.8 / 2.6	2.8 / 2.6
M472 / 473	4.5 / 4	8 / 7.6	7.5 / 7	8 / 7.6	5.5 / 5	5.5 / 5
M572 / 573	7 / 6	12.8 / 11.7	11.5 / 10.5	12.8 / 11.7	8 / 7.5	8 / 7.5
M672 / 673	10 / 8.5	22.5 / 20	20 / 18	22.5 / 20	11 / 11	11 / 11
M772 / 773	20 / 18	35 / 32	30 / 28	35 / 32	22 / 20	22 / 20
M872 / 873	28 / 20	53 / 45	45 / 39	53 / 45	30 / 28	30 / 28
M972 / 973	53 / 50	90 / 87	82 / 80	90 / 87	70 / 65	70 / 65

Symbols : :Oil filling :Drain plug :Oil level :Vent Plug

N Series 2 - 3 Stage Helical Gearboxes Oil Level Plugs and Oil Quantities

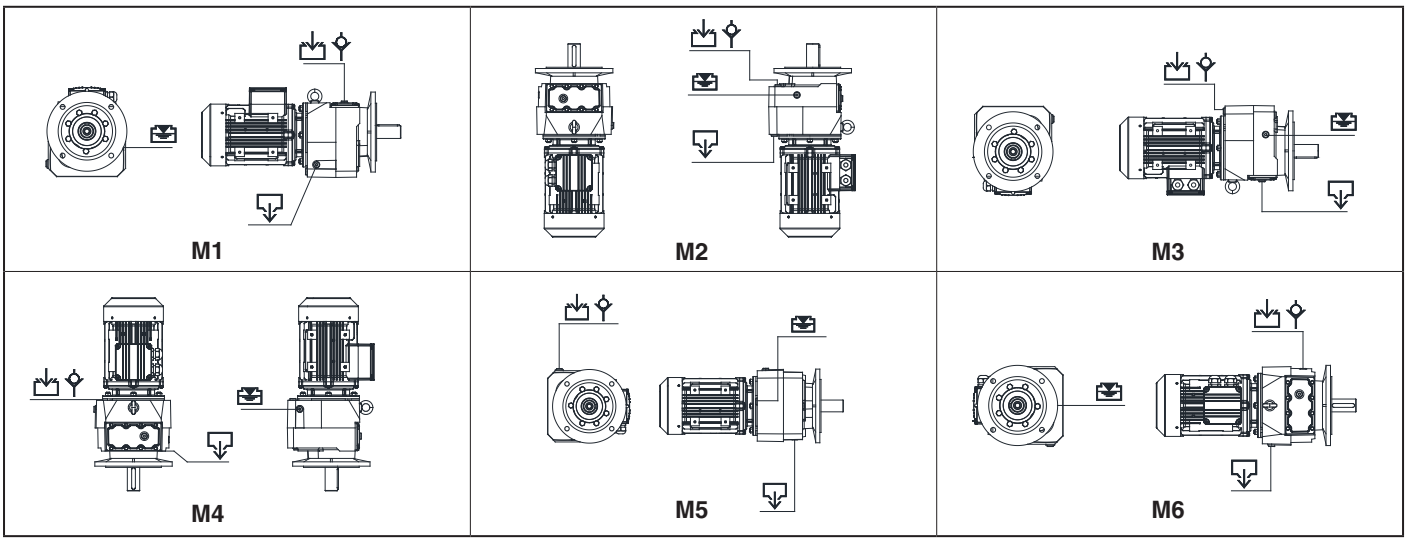

Oil Quantities (lt)

Type	N Series 2-3 Stages Oil Quantities					
	M1	M2	M3	M4	M5	M6
N002 / 003	0.4 / 0.35	0.6 / 0.55	0.5 / 0.5	0.6 / 0.55	0.5 / 0.4	0.5 / 0.4
N102 / 103	0.65 / 0.6	0.95 / 0.8	0.7 / 0.7	0.95 / 0.8	0.7 / 0.7	0.7 / 0.7
N172 / 173	0.7 / 0.65	0.95 / 0.9	0.8 / 0.8	0.95 / 0.9	0.8 / 0.7	0.8 / 0.7
N202 / 203	1.2 / 1.1	2.1 / 2	2 / 1.9	2.1 / 2	1.4 / 1.3	1.4 / 1.3
N272 / 273	1.1 / 1	2 / 1.7	1.9 / 1.5	2 / 1.7	1.3 / 1.2	1.3 / 1.2
N282 / 283	1.7 / 1.6	3 / 2.85	2.8 / 2.5	3 / 2.85	2.6 / 2.4	2.6 / 2.4
N372 / 373	2 / 1.9	3.4 / 3.3	3.1 / 3	3.4 / 3.3	2.8 / 2.6	2.8 / 2.6
N472 / 473	4.5 / 4	8 / 7.6	7.5 / 7	8 / 7.6	5.5 / 5	5.5 / 5
N572 / 573	7 / 6	12.8 / 11.7	11.5 / 10.5	12.8 / 11.7	8 / 7.5	8 / 7.5
N672 / 673	10 / 8.5	22.5 / 20	20 / 18	22.5 / 20	11 / 11	11 / 11
N772 / 773	20 / 18	35 / 32	30 / 28	35 / 32	22 / 20	22 / 20
N872 / 873	28 / 20	53 / 45	45 / 39	53 / 45	30 / 28	30 / 28
N972 / 973	53 / 50	90 / 87	82 / 80	90 / 87	70 / 65	70 / 65

Symbols : :Oil filling :Drain plug :Oil level :Vent Plug

M Series 4 Stage Helical Gearboxes Oil Level Plugs and Oil Quantities

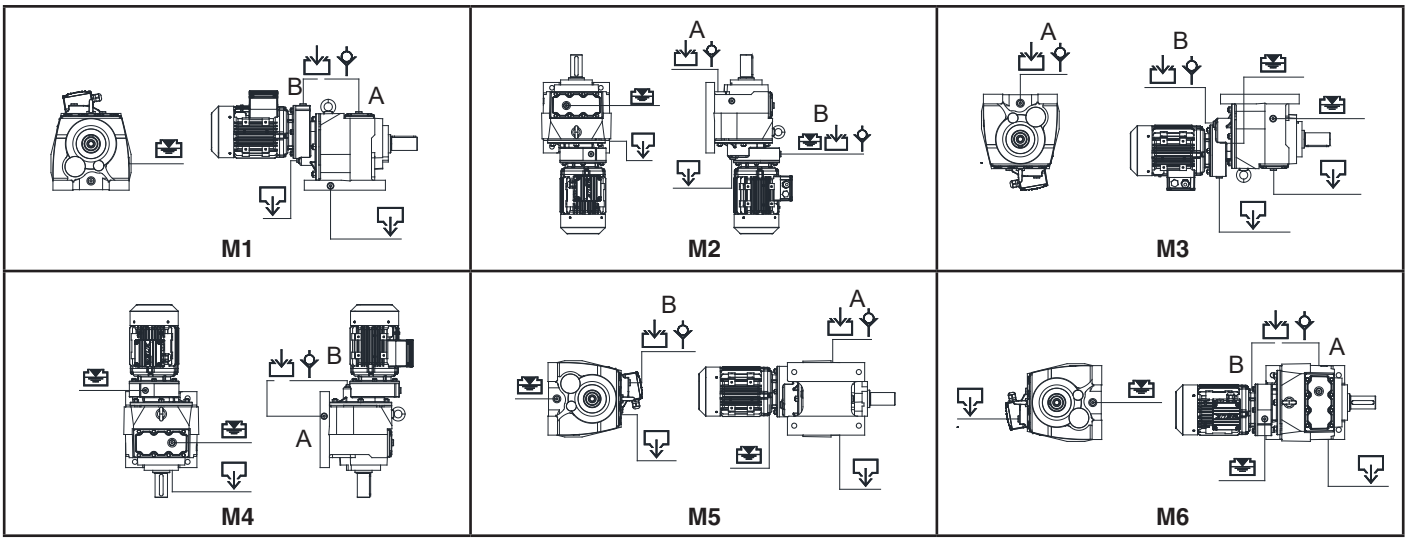

Oil Quantities (lt)

Type	M Series 4 Stages Oil Quantities					
	M1 A / B	M2 A / B	M3 A / B	M4 A / B	M5 A / B	M6 A / B
M284	1.6 / 0.25	2.85 / 0.25	2.5 / 0.25	2.85 / 0.25	2.4 / 0.25	2.4 / 0.25
M374	1.9 / 0.25	3.3 / 0.25	3 / 0.25	3.3 / 0.25	2.6 / 0.25	2.6 / 0.25
M474	4 / 0.4	7.6 / 0.4	7 / 0.4	7.6 / 0.4	5 / 0.4	5 / 0.4
M574	6 / 0.50	11.7 / 0.50	10.5 / 0.50	11.7 / 0.50	7.5 / 0.50	7.5 / 0.50
M674	8.5 / 0.90	20 / 0.90	18 / 0.90	20 / 0.90	11 / 0.90	10.5 / 0.90
M774	18 / 1	32 / 1	28 / 1	32 / 1	20 / 1	20 / 1
M874	20 / 2.15	45 / 2.15	39 / 2.15	45 / 2.15	28 / 2.15	28 / 2.15
M974	50 / 7	87 / 7	80 / 7	87 / 7	65 / 7	65 / 7

Symbols : :Oil filling :Drain plug :Oil level :Vent Plug

N Series 4 Stage Helical Gearboxes Oil Level Plugs and Oil Quantities

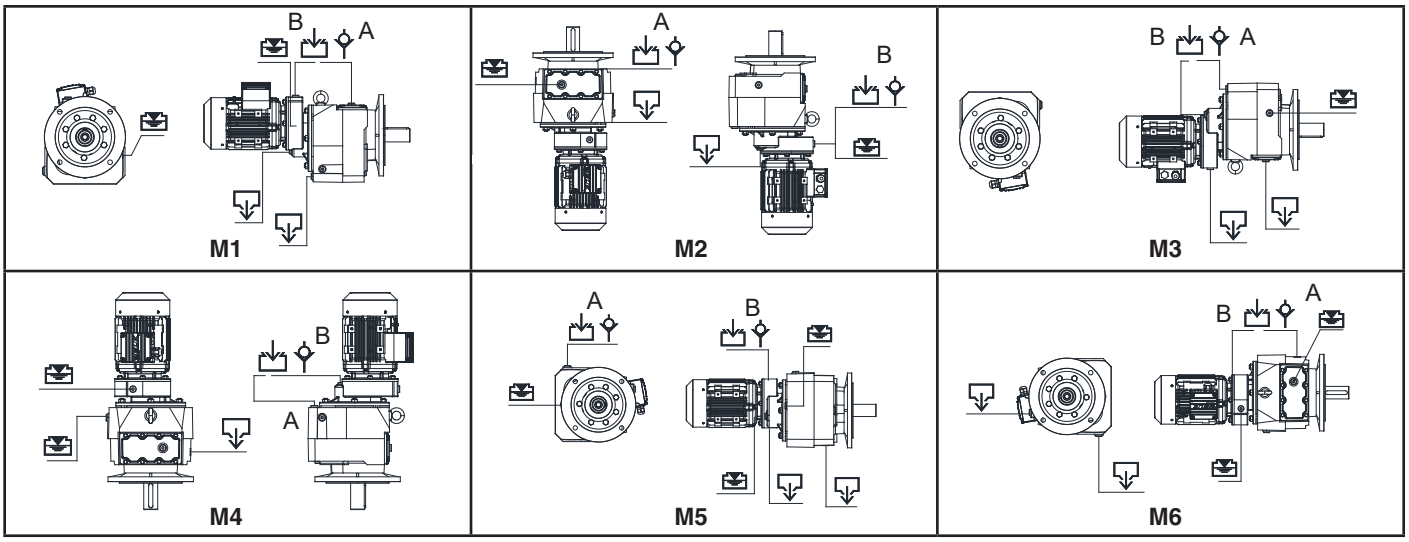

Oil Quantities (lt)

Type	N Series 4 Stages Oil Quantities					
	M1 A / B	M2 A / B	M3 A / B	M4 A / B	M5 A / B	M6 A / B
N284	1.6 / 0.25	2.85 / 0.25	2.5 / 0.25	2.85 / 0.25	2.4 / 0.25	2.4 / 0.25
N374	1.9 / 0.25	3.3 / 0.25	3 / 0.25	3.3 / 0.25	2.6 / 0.25	2.6 / 0.25
N474	4 / 0.4	7.6 / 0.4	7 / 0.4	7.6 / 0.4	5 / 0.4	5 / 0.4
N574	6 / 0.50	11.7 / 0.50	10.5 / 0.50	11.7 / 0.50	7.5 / 0.50	7.5 / 0.50
N674	8.5 / 0.90	20 / 0.90	18 / 0.90	20 / 0.90	11 / 0.90	10.5 / 0.90
N774	18 / 1	32 / 1	28 / 1	32 / 1	20 / 1	20 / 1
N874	20 / 2.15	45 / 2.15	39 / 2.15	45 / 2.15	28 / 2.15	28 / 2.15
N974	50 / 7	87 / 7	80 / 7	87 / 7	65 / 7	65 / 7

Symbols : :Oil filling :Drain plug :Oil level :Vent Plug

M Series 5 - 6 Stage Helical Gearboxes Oil Level Plugs and Oil Quantities

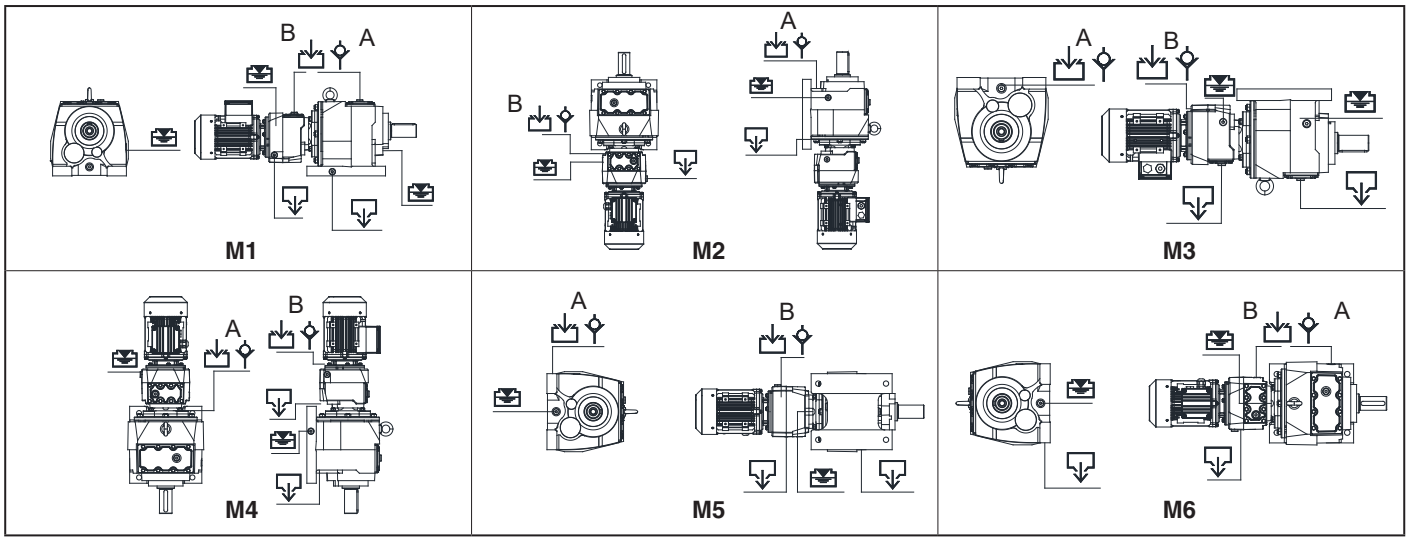

Oil Quantities (lt)

Type	M Series 5-6 Stages Oil Quantities					
	M1 A / B	M2 A / B	M3 A / B	M4 A / B	M5 A / B	M6 A / B
M275	1 / 0.4	1.7 / 0.6	1.5 / 0.5	1.7 / 0.6	1.2 / 0.5	1.2 / 0.5
M285	1.6 / 0.7	2.85 / 0.95	2.5 / 0.7	2.85 / 0.95	2.4 / 0.7	2.4 / 0.7
M375	1.9 / 0.7	3.3 / 0.95	3 / 0.7	3.3 / 0.95	2.6 / 0.7	2.6 / 0.7
M475	4 / 1.2	7.6 / 2.1	7.01 / 2.1	7.6 / 2.1	5 / 1.4	5 / 1.4
M575	6 / 1.2	11.7 / 2.1	10.5 / 2	11.7 / 2.1	7.5 / 1.4	7.5 / 1.4
M675	8.5 / 2	20 / 3.4	18 / 3.1	20 / 3.4	11 / 2.8	10.5 / 2.8
M775	18 / 2	32 / 3.4	28 / 3.1	32 / 3.4	20 / 2.8	20 / 2.8
M875	20 / 2	45 / 3.4	39 / 3.1	45 / 3.4	28 / 2.8	28 / 2.8
M975	50 / 4.5	87 / 8	80 / 7.5	87 / 8	65 / 5.5	65 / 5.5
M276	1 / 0.4	1.7 / 0.55	1.5 / 0.5	1.7 / 0.55	1.2 / 0.4	1.2 / 0.4
M286	1.6 / 0.6	2.85 / 0.8	2.5 / 0.7	2.85 / 0.8	2.4 / 0.7	2.4 / 0.65
M376	1.9 / 0.6	3.3 / 0.8	3 / 0.7	3.3 / 0.8	2.6 / 0.7	2.6 / 0.65
M476	4 / 1.1	7.6 / 2	7 / 1.9	7.6 / 2	5 / 1.3	5 / 1.3
M576	6 / 1.1	11.7 / 2	10.5 / 1.9	11.7 / 2	7.5 / 1.3	7.5 / 1.3
M676	8.5 / 1.9	20 / 3.3	18 / 3	20 / 3.3	11 / 2.6	10.5 / 2.6
M776	18 / 1.9	32 / 3.3	28 / 3	32 / 3.3	20 / 2.6	20 / 2.6
M876	20 / 1.9	45 / 3.3	39 / 3	45 / 3.3	28 / 2.6	28 / 2.6
M976	50 / 4	87 / 7.6	80 / 7	87 / 7.6	65 / 5	65 / 5

Symbols : :Oil filling :Drain plug :Oil level :Vent Plug

N Series 5 - 6 Stage Helical Gearboxes Oil Level Plugs and Oil Quantities

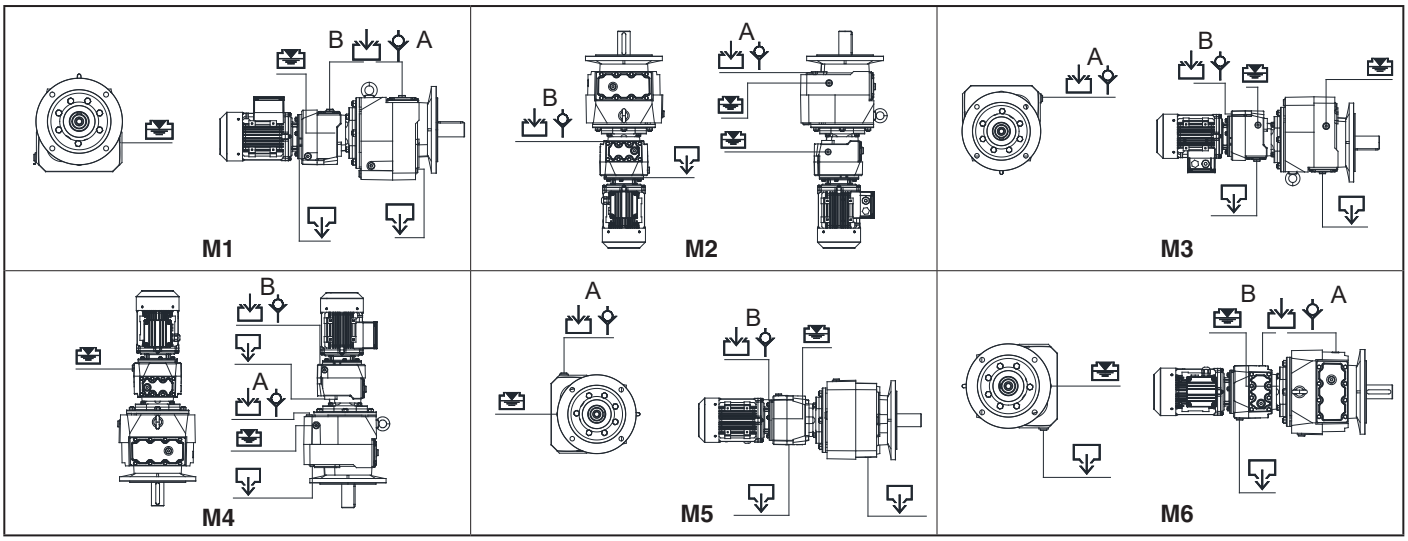

Oil Quantities (lt)

Type	N Series 5-6 Stages Oil Quantities					
	M1 A / B	M2 A / B	M3 A / B	M4 A / B	M5 A / B	M6 A / B
N275	1 / 0.4	1.7 / 0.6	1.5 / 0.5	1.7 / 0.6	1.2 / 0.5	1.2 / 0.5
N285	1.6 / 0.7	2.85 / 0.95	2.5 / 0.7	2.85 / 0.95	2.4 / 0.7	2.4 / 0.7
N375	1.9 / 0.7	3.3 / 0.95	3 / 0.7	3.3 / 0.95	2.6 / 0.7	2.6 / 0.7
N475	4 / 1.2	7.6 / 2.1	7.01 / 2.1	7.6 / 2.1	5 / 1.4	5 / 1.4
N575	6 / 1.2	11.7 / 2.1	10.5 / 2	11.7 / 2.1	7.5 / 1.4	7.5 / 1.4
N675	8.5 / 2	20 / 3.4	18 / 3.1	20 / 3.4	11 / 2.8	10.5 / 2.8
N775	18 / 2	32 / 3.4	28 / 3.1	32 / 3.4	20 / 2.8	20 / 2.8
N875	20 / 2	45 / 3.4	39 / 3.1	45 / 3.4	28 / 2.8	28 / 2.8
N975	50 / 4.5	87 / 8	80 / 7.5	87 / 8	65 / 5.5	65 / 5.5
N276	1 / 0.4	1.7 / 0.55	1.5 / 0.5	1.7 / 0.55	1.2 / 0.4	1.2 / 0.4
N286	1.6 / 0.6	2.85 / 0.8	2.5 / 0.7	2.85 / 0.8	2.4 / 0.7	2.4 / 0.65
N376	1.9 / 0.6	3.3 / 0.8	3 / 0.7	3.3 / 0.8	2.6 / 0.7	2.6 / 0.65
N476	4 / 1.1	7.6 / 2	7 / 1.9	7.6 / 2	5 / 1.3	5 / 1.3
N576	6 / 1.1	11.7 / 2	10.5 / 1.9	11.7 / 2	7.5 / 1.3	7.5 / 1.3
N676	8.5 / 1.9	20 / 3.3	18 / 3	20 / 3.3	11 / 2.6	10.5 / 2.6
N776	18 / 1.9	32 / 3.3	28 / 3	32 / 3.3	20 / 2.6	20 / 2.6
N876	20 / 1.9	45 / 3.3	39 / 3	45 / 3.3	28 / 2.6	28 / 2.6
N976	50 / 4	87 / 7.6	80 / 7	87 / 7.6	65 / 5	65 / 5

Symbols : :Oil filling :Drain plug :Oil level :Vent Plug

AC Motors - General Specifications

On account of its simple and maintenance free construction, good reliability and price, the three phase squirrel cage motor is one of the most frequently employed electric motors. The run up behavior of a three phase squirrel cage motor is described by the torque-speed characteristic curve. An example is shown below.

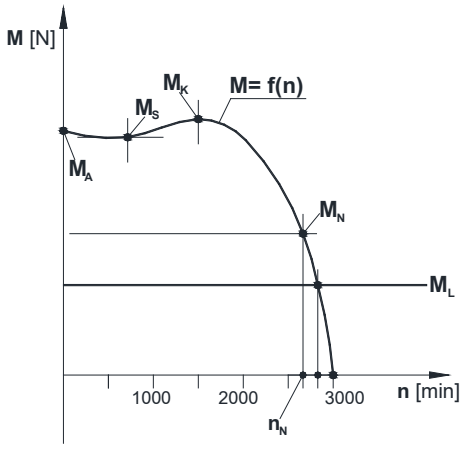

M_A: Starting torgue

M_S: Pull-up torgue

M_K: Pull -out torgue

M_N: Motor rated torque

M_L: Load torque

The motor follows this torque characteristics up to its stable operating point every time, when it is switched on. Operating point is that point, where the moment speed curve intersects with load torque M_L line.
The magnetic field in the stator rotates at a synchronous speed n_s.

Phase shift of each pole is 120° at 3 phase motors.

$$n_s = 120 \times \frac{f}{p_s}$$

f: supply frequency [Hz]
p_s: number of stator poles

Because of the alternating magnetic field in the rotor, the rotor starts running in the same direction of the stator flux and tries to catch up with the rotating flux. The rotor never catches up the stator field. The rotor runs slower than the speed of the stator field.
This speed is called the base speed n_N.

A decrease in load will cause the rotor to speed up or decrease slip. The slip is defined as follows:

$$s = \frac{n_s - n_N}{n_s} \times 100$$

According to the slip, the nominal values of the electric motor can alter as follows:

Slip s:	± 20%
Starting current:	± 20%
Starting torque:	-15 /+25 %
Moment of inertia:	± 10%
Efficiency (up to 37 kW):	-0,15 (1-η)

AC Motors - Modes of Operation

All motors of the catalogue have been laid out for duty S1 (continuous operation). Other duty types are given on the following table.

Operation	Explanation	Load Graphic
S1	Continuous operation under constant load	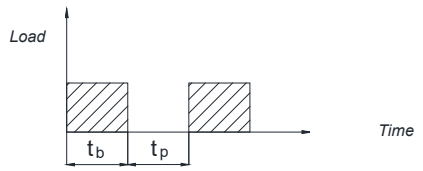
S2	Short-time duty under constant load	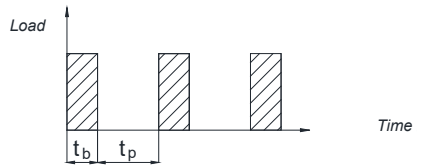
S3	Periodic duty without influence of start-up on temperature	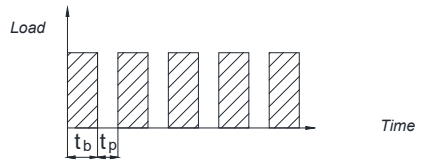
S4	Periodic duty with influence of start up on temperature	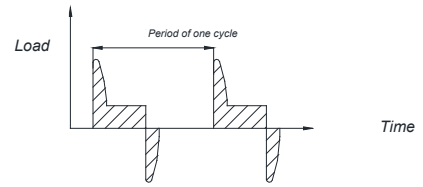
S5	Periodic duty with influence of startup and braking on temp.	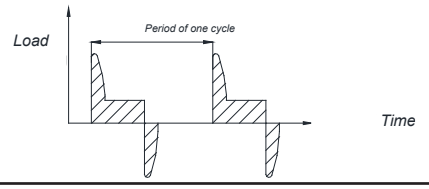
S6	Continuous operation with intermittent loading	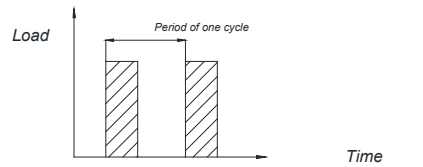
S7	Continuous operation with intermittent loading and breaking	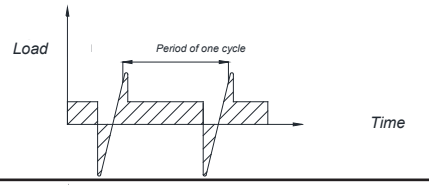
S8	Continuous operation duty type with related load-speed changes	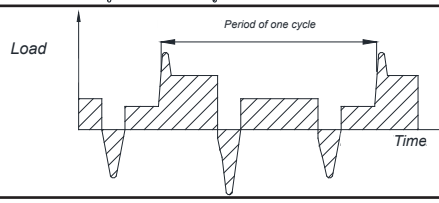

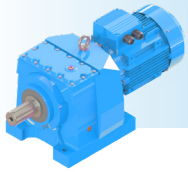

GENERAL INFORMATIONS - AC MOTORS

Protection Class

Dana uses IP54 (IEC 34-5) protection class electric motors for standard products. If different kind of protection class is requested please contact us.

Insulation Class

Dana uses F (IEC 317-8) insulation class electric motors for standard products. H insolation class is available upon request.

Efficiency Classes

The method for measuring the efficiency of low voltage three-phase asynchronous motors was revised with the new IEC 60034-2-1:2007 standard. The new IE classes is valid for AC Motors in power range from 0,75 to 375 kW.

Unlike the EFF classes IE classes can be used for 6-pole AC motors. Bellow is the table of efficiency classes.
The instructions for efficiency classes can differ from country to country. Please contact with us for more information.

For the motors, which are fully integrated into a product (for example gear, pump) so their energy efficiency can not be recognized independently, the requirements of efficiency are not valid in Europe.

Efficiency Classes			Calculating Efficiency Values of Motors with 4 Poles	
IE1	EFF 2	Standart Efficiency	A=0,5234 B=-5,0499 C=17,4180 D=74,3171	$\eta_{Mn} = A \times \left[\log_{10}(P_L)\right] + B \times \left[\log_{10}(P_L)\right]^2 + C \times \log_{10}(P_L) + D$
IE2	EFF 1	High Efficiency	A=0,0278 B=-1,9247 C=10,4395 D=80,9761	P_L : Nominal Load [kW] η_{Mn} : Nominal Efficiency [kW]
IE3	-	Premium Efficiency	A=0,0773 B=-1,8951 C=9,2984 D=83,7025	
IE4	-	Super Premium Efficiency	-	

Efficiency Values of Motor with 4 poles	Nominal Load [kW]	Efficiency Class		
		IE1	IE2	IE3
	0,75	72,1 %	79,6 %	82,5 %
	1,5	77,2 %	82,8 %	85,3 %
	3	81,5 %	85,5 %	87,7 %
	7,5	86 %	88,7 %	90,4 %
	15	88,7 %	90,6 %	92,1 %
	22	89,9 %	91,6 %	93 %
	37	91,2 %	92,7 %	93,9 %
	45	91,7 %	93,1 %	94,2 %
	75	92,7 %	94 %	95 %
	90	93 %	94,2 %	95,2 %
	330	94 %	95,1 %	96 %

AC Frequency Inverters

An electronic converter is a device which converts Direct Current (DC) to Alternating Current (AC) is known as an inverter. Electronic speed controllers for AC motors usually convert the AC supply to DC using a rectifier, and then convert it back to a variable frequency, variable voltage AC supply using an inverter bridge.
The connection between the rectifier and inverter is called the DC link.
The block diagram of a speed controller (often called an inverter) is shown below.

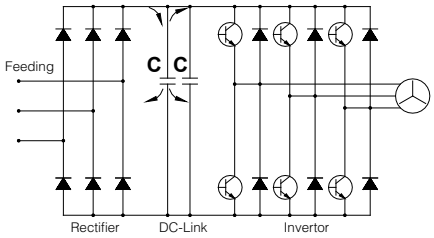

The three phase supply is fed into a full wave rectifier which supplies the DC link capacitors.
The capacitors reduce the voltage ripple (especially on single supplies) and supply energy for short mains breaks.
The voltage on the capacitors is uncontrolled and depends on the peak AC supply voltage.
The DC voltage is converted back to AC using Pulse Width Modulation (PWM).

The desired waveform is built up by switching the output transistors (Insulated Gate Bipolar Transistors; IGBTs) on and off at a fixed frequency (the switching frequency).

By varying the on and off time of the IGBTs the desired current can be generated. The output voltage is still a series of square wave pulses and the inductance of the motor windings results in a sinusodial motor current.
Pulse Width Modulation is shown in the figure below.

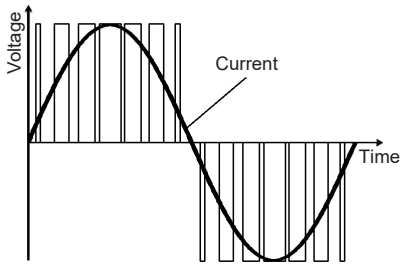

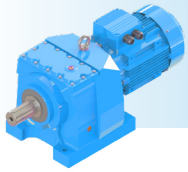

GENERAL INFORMATIONS - DC MOTORS

DC Motors - General Specifications

DC drive systems have found new possible applications with the development of the electronic components sector. What was previously extremely expensive and in some cases not economically feasible is nowadays realized by miniaturised power converter technology.
Additional functions such as guided startup after a predetermined time, torque and current monitoring with electronic protection against overloading, and many inexpensive special applications have made DC drive systems more attractive.

DC Motors - Operating Principles

The DC motor requires, a converter with DC output. The motor includes windings, such as armature, field, commutation and compensation windings, which are arranged in the stator as well as on rotor. Voltage and current are supplied to the rotor via the carbon brushes and the commutator. The carbon brushes are wearing parts therefore a DC motor requires maintenance at service intervals. While its good control properties, the DC motor is an essential item in automation technology.

DC Motors - Types

Depending on the wiring of the exciting winding or field winding, two basically different variants are regards torque speed characteristics may be distinguished.

DC Motors - Speed Control

In DC motors the speed is adjusted by altering the DC voltage.
DC shunt wounded motors behave similar to three phase induction motors between no load operation and maximum load.
The speed drops with increasing loading of the motor. This difference is greater in small motors and smaller in larger motors.
The speed difference can compensated in the DC converter device by adjusting (I x R). If great control accuracy is required, a speed control with measurement of the actual values by a tachogenerator can be used.

The power of DC motor;

$$P_g = U \times I = \frac{P_c}{\eta}$$

P_g : Input Power W
P_C : Output Power W
U : Armature Voltage V
I : Armature Current A
η : Motor efficiency

Brakes - Types and General Informations

This type of brakes has two friction surfaces. Brake torque is generated by springs when no voltage is applied. The brake is electromagnetically released.
On exciting the electromagnet means of the current, the armature plate is pulled towards the electromagnet itself, thrust loading the pressure spring and enabling the friction disc which is axially movable on the key, to turn freely.
When current fails, the pressured springs drive the armature plate towards the disc, thus braking the motor shaft.

Brake Types:

a) Brakes without cooling
This type of brakes are assembled on the back cover of the electric motor. There is no fan on the backside. This brake type is mostly preferred in short working times and short working cycles.

b) Fan cooled brakes
This type of brakes are assembled on the back cover of electric motor by removing the electric motor fan. A fan is coupled to the backside of the brake by extending the rotor shaft of the electric motor. Fan cooled brakes are preferred in long working times and closed places without airflow.

c) Brakes with hand release
This brakes can be released by help of an arm. It can be applied to both of the above mentioned brakes and used in special cases (fail of electric current, mechanical problems etc.)
These brakes are mostly preferred if operation (relasing) without a current is needed (automatic controlled doors, gates, building wall painting elevators etc.).

Brakes - Working Voltages

Electromagnetic brakes can be ordered with 230V AC or 400V AC supply voltage. The coil of brakes needs DC voltage and therefore depending on brake type a half wave, a full wave rectifier or transformer should be used between supply and coil voltage.
As standard the brakes will be delivered with 230V supply voltage and half wave rectifier, if there is no special request.
For special cases please contact Dana.

a) Brakes with 230V supply voltage
230V AC supply voltage from the motor terminal box will be reduced to the coil voltage depending on the brake type with half-wave or full-wave rectifier. DC brake coil voltage is indicated on the label.

b) Brakes with 400V supply voltage
400V AC supply voltage from the motor terminal box will be reduced to the coil voltage with half-wave rectifier. DC brake coil voltage indicated on the label.

c) 24V DC Brakes
The transformator's size is selected according to value of brake torque. The current is taken from the electric motor terminal box or from the electric panel and is transformed to 29V DC current. This current is transferred to 24V DC current with full-wave rectifier and supplies brake coil.

d) Shock voltage supply transformer
Brakes which consist of high power and torques take long time to get in electromagnetic field. Shock voltage supply transformers with time relay are aiming to overcome spring pressure delaying for brakes .
Also this transformers provide to open system suddenly by feeding double(48V DC) voltage in a short time and preventing to frictional loses occurring in delayed opening.

Brakes - Connection Types

a) Delayed Braking
Generally this type of connection uses in slow and sliding brake intended systems. Delayed connection type using to prevent shock loadings in crane driving systems. Brakes are setting up to delayed connection if any other types are not specified by customer

b) Sudden Braking
This type of connections are mostly used in systems when short braking times are needed. The braking torque will be produced as soon as the current fails. These brakes are mostly used in hoisting of lifting units and elevators.

Delayed Running Brake
(230 V)

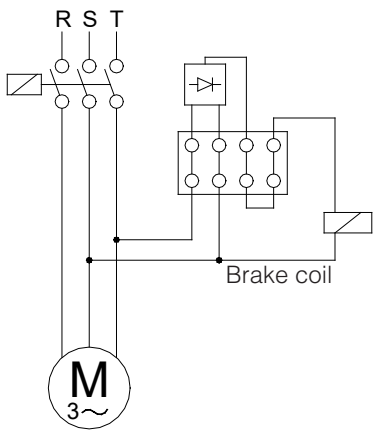

Sudden Brake
(230 V)

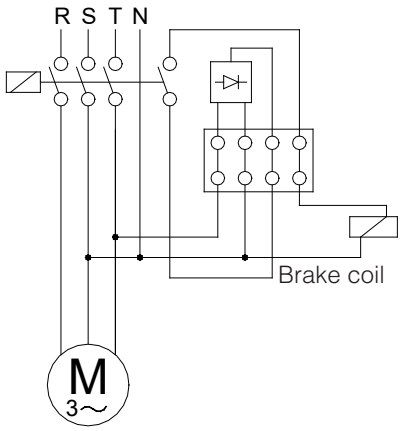

Delayed Running Brake
(24 V)

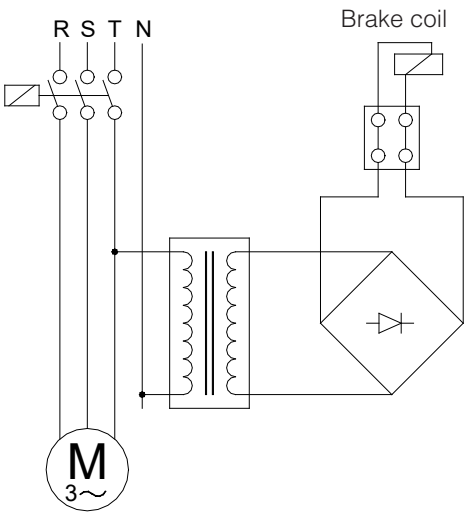

Sudden Brake
(24 V)

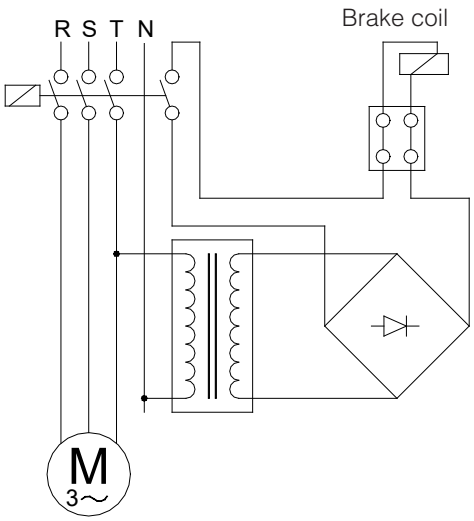

Brakes - Selection

To select a brake correctly the following data are necessary;

- **I_{tot} [kg . m²]** : The total inertia of rotating parts reduced at the motor shaft
- **n_0 [rpm]** : Maximum motor speed.
- **t_f [s]** : The maximum admitted time of the braking.
- **c_t** : Coefficient of switch on time (average 0,995).
- **M_L [Nm]** : Required static torque of system.
- **C_S** : Safety coefficient ($C_S \geq 2$)

The necessary braking torque calculates below:

a) The static load torque M_L ,
same direction of motor rotation (Descent of a load or steady resisting torque which favours the rotation of the motor)

$$M_{fc} = \frac{(2\pi \times n_0 \div 60) \times I_{tot}}{t_f \times c_t} + M_L$$

b) The static load torque M_L ,
opposes the rotation of the motor (Lifting of a load or steady resisting torque which opposes the rotation of the motor)

$$M_{fc} = \frac{(2\pi \times n_0 \div 60) \times I_{tot}}{t_f \times c_t} - M_L$$

The necessary braking torque will result from the following equation using C_S ($C_S \geq 2$);

$$M_f = M_{fc} \times C_s$$

Approximated Brake Selection
Its only the motor power and its maximum speed are known:

W [Watt]: Motor Nominal Power

$$M_f = \frac{W}{\left(\frac{2\pi \times n_0}{60}\right)} \times C_s \quad (C_s \geq 2)$$

Standard Brakes

Brake Static Torque [Nm]	4,5	8	12	16	35	60	80	150	200
Brake Dynamic Torque [Nm]	3,6	6,4	9,6	12,8	28	48	64	120	160
Maximum Motor Speed [rpm]	3000	3000	3000	3000	3000	3000	3000	1500	1500
Input Power [W]	15	20	25	30	45	50	55	60	65

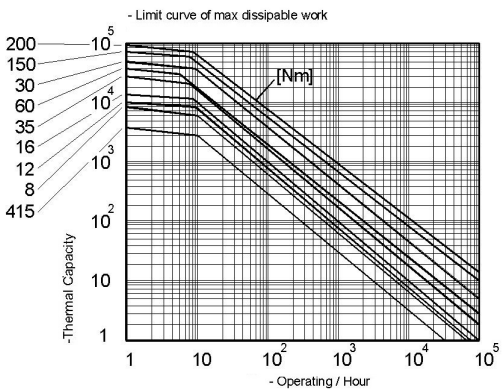

Brakes - Thermal Capacity

The thermal capacity of the brake must also be checked after the above mentioned calculations.The heat dissipation energy L (joule) can be calculated from the following equation and must be checked if the result is under the limit curve shown on ''Limit curve of may dissipable work''.

a) The static load torgue M_L ,favours the rotation of the motor (Descent of a load which favours the rotation of the motor)

$$L = \frac{I_{tot} \times (2\pi \times n_0 \div 60)^2}{2} \times \left(\frac{M_f}{M_f - M_L}\right)$$

b) The static load torgue M_L ,opposes the rotation of the motor (Lifting of a load which opposes the rotation of the motor)

$$L = \frac{I_{tot} \times (2\pi \times n_0 \div 60)^2}{2} \times \left(\frac{M_f}{M_f + M_L}\right)$$

c) The static load torgue M_L ,is constant and opposes or favours the rotation of the motor (except lifting of a load)

$$L = \frac{I_{tot} \times (2\pi \times n_0 \div 60)^2}{2}$$

Adjustment of the air-gap:

In order to obtain the same performance from the brake during its lifetime,the air-gap of the brake must be re-adjusted after a limited time of operation For the air-gap and the time interval of the adjustment please contact us.

Selection Example:
The maximum admitted time for braking 0,5 s
Motor speed: 1400 rpm
Total inertia reduced at motor shaft: 0,08 kgm^2

Required operating torque:50 Nm
Nature of load: Load direction is same as motor direction(Unloading process: Start-stop time per hour :30)

$$M_{fc} = \frac{(2\pi \times 1400 \div 60)}{0,5 \times 0,995} + 50 = 73,6\ Nm$$

$$M_f = 73,6 \times 2 = 147,2\ Nm$$

From the brake selection table a standard brake of 150 Nm is selected.
Necessary thermal capacity

$$L = \frac{0,08 \times (2\pi \times 1400 \div 60)^2}{2} \times \left(\frac{147,2}{147,2 - 50}\right) = 1302,0 < 18000 \text{ Joule (from 150 Nm curve)}$$

The selected brake with 150 Nm is suitable.

PERFORMANCE TABLES

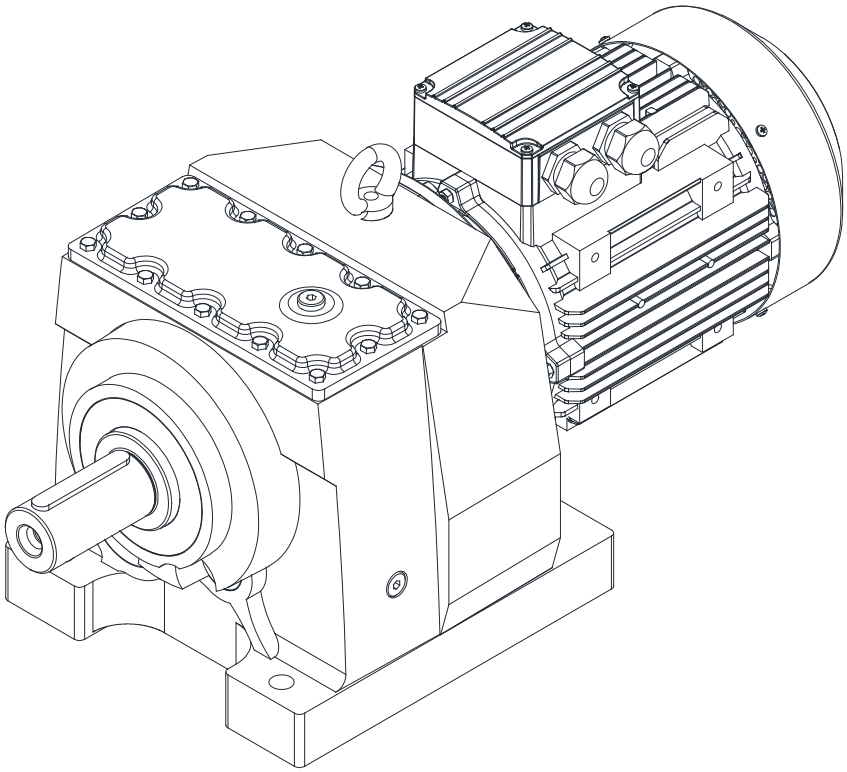

MR, NR version are referenced in the following performace tables, if electric motor data are known you can either select MV,MN, NV, NN version using the same tables or through the on line configurator

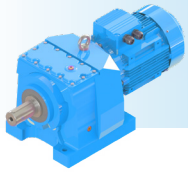

MR/MV/MN/NR/NV/NN - PERFORMANCE TABLES

Power P_g [kW] P_g [HP]	Output Speeds n_2 [r.p.m]	Output Torque M_2 [Nm]	Ratio i	Radial Loads (Output) F_{qam} [N]	Service Factors f_s	Type	Rated Current [A]	Weight ~ [kg]	Dim. Page	Motor Eff. Class
0,12 0,16	0,28	3242	**4953,44**	18152	0,9	**MR576-G63/4a**	0,41	157	127	IE1
	0,31	2883	**4402,68**	20503	1,0	**NR576-G63/4a**		151		
	0,40	2212	**3372,36**	24025	1,4					
	0,48	1872	**2850,22**	25448	1,6					
	0,50	1832	**2736,94**	25606	1,6	**MR575-G63/4a**	0,41	155	127	IE1
	0,59	1550	**2313,18**	26663	1,9	**NR575-G63/4a**		149		
	0,72	1270	**1897,20**	27612	2,4					
	0,81	1123	**1675,43**	28077	2,7					
	0,92	998	**1489,14**	28449	3,0					
	1,1	845	**1259,61**	28915	3,5					
	1,2	767	**1140,65**	29101	3,9					
	0,50	1691	**2522,85**	13294	0,9	**MR475-G63/4a**	0,41	100	124	IE1
	0,65	1413	**2107,15**	17344	1,1	**NR475-G63/4a**		103		
	0,69	1336	**1990,76**	18266	1,2					
	0,78	1169	**1738,98**	20032	1,3					
	0,84	1097	**1631,08**	20714	1,4					
	0,98	933	**1386,75**	22094	1,7					
	1,1	867	**1285,79**	22653	1,8					
	1,1	812	**1204,49**	23070	1,9					
	1,3	712	**1053,93**	23786	2,2					
	1,5	633	**934,94**	24312	2,4					
	0,90	1045	**1561,78**	6910	0,8	**MR375-G63/4a**	0,41	76	121	IE1
	1,0	925	**1380,71**	9830	0,9	**NR375-G63/4a**		78		
	1,2	778	**1161,33**	12320	1,1					
	1,4	662	**987,33**	13863	1,2					
	1,6	568	**845,97**	14931	1,4					
	1,8	514	**765,58**	15470	1,6					
	2,0	455	**676,02**	16025	1,8					
	2,2	425	**631,45**	16286	1,9					
	2,6	360	**533,70**	16828	2,3					
	2,6	361	**524,07**	16815	2,3	**MR374-G63/4a**	0,41	55	120	IE1
	3,2	291	**421,85**	17348	2,8	**NR374-G63/4a**		58		
	3,7	255	**369,93**	17599	3,2					
	1,1	809	**1206,98**	2333	0,7	**MR285-G63/4a**	0,41	74	118	IE1
	1,3	681	**1015,21**	7487	0,9	**NR285-G63/4a**		75		
	1,6	580	**863,11**	9637	1,0					
	1,8	497	**739,53**	10983	1,2					
	2,0	450	**669,25**	11641	1,3					
	2,4	385	**573,81**	12445	1,6					
	2,8	330	**491,50**	13057	1,8					
	3,2	298	**431,18**	13388	2,0	**MR284-G63/4a**	0,41	74	117	IE1
	3,7	254	**368,77**	13798	2,4	**NR284-G63/4a**		75		
	4,2	223	**323,39**	14073	2,7					
	1,6	555	**827,44**	5855	0,8	**MR275-G63/4a**	0,41	41	115	IE1
	1,9	486	**724,01**	6465	0,9	**NR275-G63/4a**		43		
	2,3	403	**598,70**	7080	1,1					
	2,7	336	**499,32**	7505	1,3					
	3,3	282	**418,57**	7806	1,6					
	3,8	242	**358,33**	8008	1,9					
	4,1	225	**332,52**	8090	2,0					
	5,4	170	**252,20**	8331	2,6					

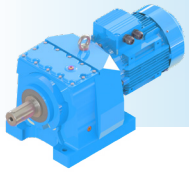

Power P_g [kW] P_g [HP]	IE3 Output Speeds n_2 [r.p.m]	IE3 Output Torque M_2 [Nm]	Ratio i	IE3 Radial Loads (Output) F_{qam} [N]	IE3 Service Factors f_s	Type	Rated Current [A]	Weight ~ [kg]	Dim. Page	* Motor Eff. Class
0,12 0,16	6,3 6,6 7,6 9,2	146 139 122 101	**215,91** **205,95** **180,21** **149,02**	8429 8457 8523 8760	3,1 3,2 3,7 4,0	**MR275-G63/4a** **NR275-G63/4a**	0,41	41 43	115	IE1
	9,9 11 12	107 94 88	**138,55** **121,03** **113,52**	8650 8864 8944	4,0 4,0 4,0	**MR273-G63/4a** **NR273-G63/4a**	0,41	30 32	114	IE1
	14 16 17 20 24 27	77 68 63 54 45 39	**99,21** **87,60** **81,82** **69,16** **57,76** **49,81**	5764 5565 5457 5197 4928 4715	2,6 2,9 3,2 3,7 4,0 4,0	**MR173-G63/4a** **NR173-G63/4a**	0,41	30 32	112	IE1
	30 34 43 48 57 64 66 71 75 81 93 100	35 31 25 22 19 17 16 15 14 13 11 11	**45,18** **40,04** **32,02** **28,38** **24,13** **21,26** **20,66** **19,17** **18,20** **16,89** **14,67** **13,61**	2835 2857 2894 2906 2797 2679 2649 2581 2537 2472 2357 2297	2,4 2,6 3,3 3,7 4,0 4,0 4,0 4,0 4,0 4,0 4,0 4,0	**MR003-G63/4a** **NR003-G63/4a**	0,41	12 13	110	IE1
	123 138 157 162 174 183 198 228 245 300 350 377	9 8 7 7 6 6 5 5 4 4 3 3	**11,14** **9,87** **8,70** **8,45** **7,84** **7,45** **6,91** **6,00** **5,57** **4,56** **3,90** **3,62**	2156 2068 1980 1959 1909 1876 1828 1743 1698 1588 1506 1467	4,0 4,0 4,0 4,0 4,0 4,0 4,0 4,0 4,0 4,0 4,0 4,0	**MR002-G63/4a** **NR002-G63/4a**	0,41	11 12	110	IE1
0,18 0,25	0,11 0,13 0,15 0,17 0,19 0,21 0,24 0,27 0,32 0,38	12679 10968 9582 8459 7530 6749 5928 5248 4423 3768	**8345,18** **7233,00** **6313,78** **5569,66** **4954,95** **4438,59** **3892,30** **3441,02** **2894,28** **2460,65**	74316 83155 89283 93713 96997 99684 102261 104265 106552 108262	1,0 1,2 1,4 1,5 1,7 1,9 2,2 2,5 2,9 3,5	**MR876-3E71M/6C** **NR876-3E71M/6C** **MR876-2E71M/6B** **NR876-2E71M/6B**	0,55 0,60	607 622 606 621	136	IE3 IE2
	0,16 0,18	9031 7996	**5949,83** **5260,00**	44490 48911	0,9 1,0	**MR776-3E71M/6C** **NR776-3E71M/6C** **MR776-2E71M/6B** **NR776-2E71M/6B**	0,55 0,60	260 322 259 321	133	IE3 IE2

*: Geared motor prices are different for IE2 and IE3 motors.

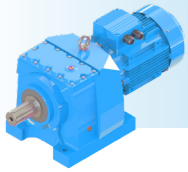

MR/MV/MN/NR/NV/NN - PERFORMANCE TABLES

Power P_g [kW] P_g [HP]	IE3 Output Speeds n_2 [r.p.m]	IE3 Output Torque M_2 [Nm]	Ratio i	IE3 Radial Loads (Output) F_{qam} [N]	IE3 Service Factors f_s	Type	Rated Current [A]	Weight ~ [kg]	Dim. Page	* Motor Eff. Class
0,18	0,19	7482	**4812,09**	50862	1,1	**MR775-3E71M/6C**	0,55	257	133	IE3
0,25	0,22	6629	**4263,81**	53816	1,2	**NR775-3E71M/6C**		317		
	0,24	5935	**3814,39**	55991	1,3	**MR775-2E71M/6B**	0,60	256		IE2
	0,30	4842	**3103,85**	59051	1,7	**NR775-2E71M/6B**		316		
	0,35	4180	**2684,10**	60717	1,9					
	0,40	3623	**2324,10**	62017	2,2					
	0,46	3171	**2032,66**	62935	2,5					
	0,52	2798	**1791,91**	63725	2,9					
	0,59	2484	**1589,68**	64362	3,2					
	0,66	2216	**1417,41**	64885	3,6					
	0,74	1962	**1252,60**	65684	4,0					
	0,32	4378	**2863,86**	25882	1,0	**MR676-3E71M/6C**	0,55	240	130	IE3
						NR676-3E71M/6C		249		
						MR676-2E71M/6B	0,60	239		IE2
						NR676-2E71M/6B		248		
	0,36	4025	**2578,93**	27987	1,1	**MR675-3E71M/6C**	0,55	230	130	IE3
	0,42	3422	**2196,86**	30945	1,3	**NR675-3E71M/6C**		244		
	0,49	2945	**1888,53**	32984	1,5	**MR675-2E71M/6B**	0,60	229		IE2
	0,57	2558	**1638,93**	34461	1,7	**NR675-2E71M/6B**		243		
	0,65	2238	**1432,74**	35578	1,9					
	0,74	1969	**1259,54**	36451	2,2					
	0,84	1743	**1113,08**	37141	2,5					
	0,93	1560	**995,91**	37624	2,8					
	1,1	1372	**874,56**	38151	3,1					
	1,3	1149	**730,46**	38748	3,7					
	0,47	3019	**2850,22**	19665	1,0	**MR576-G63/4b**	0,60	160	127	IE1
						NR576-G63/4b		153		
	0,49	2955	**2736,94**	20068	1,0	**MR575-G63/4b**	0,60	152	127	IE1
	0,58	2499	**2313,18**	22617	1,2	**NR575-G63/4b**		148		
	0,71	2049	**1897,20**	24715	1,5					
	0,80	1811	**1675,43**	25689	1,7					
	0,90	1610	**1489,14**	26424	1,9					
	1,1	1363	**1259,61**	27307	2,2					
	1,2	1237	**1140,65**	27718	2,4					
	1,6	923	**574,90**	28639	3,3	**MR574-3E71M/6C**	0,55	137	126	IE3
	1,9	781	**485,89**	29040	3,8	**NR574-3E71M/6C**		135		
	2,3	648	**402,12**	30397	4,0	**MR574-2E71M/6B**	0,60	136		IE2
						NR574-2E71M/6B		134		
	0,77	1885	**1738,98**	9150	0,8	**MR475-G63/4b**	0,60	111	124	IE1
	0,82	1769	**1631,08**	11836	0,9	**NR475-G63/4b**		115		
	0,97	1505	**1386,75**	16156	1,0					
	1,0	1399	**1285,79**	17525	1,1					
	1,1	1309	**1204,49**	18560	1,2					
	1,4	1083	**674,46**	20840	1,4	**MR474-3E71M/6C**	0,55	96	123	IE3
	1,5	968	**603,46**	21841	1,6	**NR474-3E71M/6C**		100		
	1,8	852	**529,93**	22771	1,8	**MR474-2E71M/6B**	0,60	95		IE2
	2,1	712	**442,61**	23780	2,2	**NR474-2E71M/6B**		99		
	2,2	673	**418,16**	24045	2,3					
	2,7	559	**346,07**	24743	2,8					
	3,1	478	**295,98**	25231	3,2					

*: Geared motor prices are different for IE2 and IE3 motors.

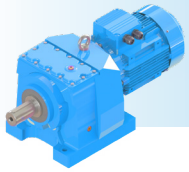

Power P_g [kW] P_g [HP]	IE3 Output Speeds n_2 [r.p.m]	IE3 Output Torque M_2 [Nm]	Ratio i	IE3 Radial Loads (Output) F_{qam} [N]	IE3 Service Factors f_s	Type	Rated Current [A]	Weight ~ [kg]	Dim. Page	* Motor Eff. Class
0,18 0,25	1,4 1,6	1068 916	**987,33** **845,97**	6178 10009	0,8 0,9	**MR375-G63/4b** **NR375-G63/4b**	0,60	76 81	121	IE1
	1,8 2,2 2,5	839 676 593	**524,07** **421,85** **369,93**	11377 13699 14655	1,0 1,2 1,4	**MR374-3E71M/6C** **NR374-3E71M/6C** **MR374-2E71M/6B** **NR374-2E71M/6B**	0,55 0,60	60 63 59 62	120	IE3 IE2
	2,6 3,2 3,6	582 469 412	**524,07** **421,85** **369,93**	14771 15919 16379	1,4 1,7 2,0	**MR374-G63/4b** **NR374-G63/4b**	0,60	55 58	120	IE1
	5,9 6,7	271 239	**157,76** **138,72**	16454 15843	3,0 3,4	**MR373-3E71M/6C** **NR373-3E71M/6C** **MR373-2E71M/6B** **NR373-2E71M/6B**	0,55 0,60	56 59 55 58	119	IE3 IE2
	2,2 2,5 2,9	691 591 519	**431,18** **368,77** **323,39**	7218 9393 10665	0,9 1,0 1,2	**MR284-3E71M/6C** **NR284-3E71M/6C** **MR284-2E71M/6B** **NR284-2E71M/6B**	0,55 0,60	64 67 63 66	117	IE3 IE2
	3,1 3,6 4,1 4,7 5,6	480 410 360 319 268	**431,18** **368,77** **323,39** **285,89** **240,47**	11227 12144 12730 13180 13658	1,3 1,5 1,7 1,9 2,2	**MR284-G63/4b** **NR284-G63/4b**	0,60	60 63	117	IE1
	6,7 8,1	240 199	**137,91** **114,14**	13106 12414	2,5 3,1	**MR283-3E71M/6C** **NR283-3E71M/6C** **MR283-2E71M/6B** **NR283-2E71M/6B**	0,55 0,60	42 44 41 43	116	IE3 IE2
	2,7 3,2 3,7 4,0 5,3	542 455 390 362 275	**499,32** **418,57** **358,33** **332,52** **252,20**	5982 6713 7169 7346 7844	0,8 1,0 1,2 1,2 1,6	**MR275-G63/4b** **NR275-G63/4b**	0,60	41 43	115	IE1
	6,7 7,7 8,2 9,6	238 208 196 166	**138,55** **121,03** **113,52** **96,52**	8024 8154 8212 8339	1,9 2,2 2,3 2,7	**MR273-3E71M/6C** **NR273-3E71M/6C** **MR273-2E71M/6B** **NR273-2E71M/6B**	0,55 0,60	32 34 31 33	114	IE3 IE2
	9,7 11 12	165 144 135	**138,55** **121,03** **113,52**	8352 8436 8470	2,7 3,1 3,3	**MR273-G63/4b** **NR273-G63/4b**	0,60	28 30	114	IE1
	14 16 17	117 103 96	**68,03** **59,43** **55,74**	8475 8504 8346	2,4 2,7 2,9	**MR203-3E71M/6C** **NR203-3E71M/6C** **MR203-2E71M/6B** **NR203-2E71M/6B**	0,55 0,60	30 32 29 31	113	IE3 IE2
	20	81	**68,03**	7944	3,4	**MR203-G63/4b** **NR203-G63/4b**	0,60	27 29	113	IE1

*: Geared motor prices are different for IE2 and IE3 motors.

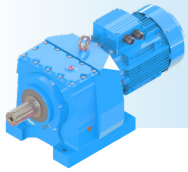

MR/MV/MN/NR/NV/NN - PERFORMANCE TABLES

Power P_g [kW] P_g [HP]	IE3 Output Speeds n_2 [r.p.m]	IE3 Output Torque M_2 [Nm]	Ratio i	IE3 Radial Loads (Output) F_{qam} [N]	IE3 Service Factors f_s	Type	Rated Current [A]	Weight ~ [kg]	Dim. Page	* Motor Eff. Class
0,18	9,4	171	**99,21**	5822	1,2	**MR173-3E71M/6C**	0,55	18	113	IE3
0,25	11	151	**87,60**	5895	1,3	**NR173-3E71M/6C**		20		
	11	141	**81,82**	5801	1,4	**MR173-2E71M/6B**	0,60	17		IE2
	13	119	**69,16**	5568	1,7	**NR173-2E71M/6B**		19		
	14	118	**99,21**	5561	1,7	**MR173-G63/4b**	0,60	13	113	IE1
	15	104	**87,60**	5389	1,9	**NR173-G63/4b**		15		
	16	98	**81,82**	5294	2,1					
	19	82	**69,16**	5063	2,4					
	23	69	**57,76**	4820	2,9					
	27	60	**49,81**	4624	3,4					
	18	87	**50,51**	3512	1,6	**MR103-3E71M/6C**	0,55	17	111	IE3
	21	77	**44,60**	3411	1,8	**NR103-3E71M/6C**		19		
	22	72	**41,66**	3355	1,9	**MR103-2E71M/6B**	0,60	16		IE2
						NR103-2E71M/6B		18		
	27	60	**50,51**	3213	2,3	**MR103-G63/4b**	0,60	16	111	IE1
	30	53	**44,60**	3112	2,6	**NR103-G63/4b**		18		
	32	50	**41,66**	3056	2,8					
	38	42	**35,21**	2921	3,3					
	21	77	**45,18**	2530	1,1	**MR003-3E71M/6C**	0,55	16	110	IE3
	23	69	**40,04**	2603	1,2	**NR003-3E71M/6C**		17		
	29	55	**32,02**	2707	1,5	**MR003-2E71M/6B**	0,60	15		IE2
						NR003-2E71M/6B		16		
	30	54	**45,18**	2717	1,5	**MR003-G63/4b**	0,60	13	110	IE1
	33	48	**40,04**	2757	1,7	**NR003-G63/4b**		14		
	42	38	**32,02**	2818	2,2					
	47	34	**28,38**	2840	2,4					
	56	29	**24,13**	2733	2,8					
	63	25	**21,26**	2664	3,2					
	65	25	**20,66**	2672	3,3					
	70	23	**19,17**	2628	3,6					
	74	22	**18,20**	2584	3,8					
	79	20	**16,89**	2516	4,0					
	91	18	**14,67**	2398	4,0					
	98	16	**13,61**	2336	4,0					
	120	13	**11,14**	2197	4,0	**MR002-G63/4b**	0,60	12	110	IE1
	136	12	**9,87**	2105	4,0	**NR002-G63/4b**		13		
	154	11	**8,70**	2014	4,0					
	159	10	**8,45**	1992	4,0					
	171	9,5	**7,84**	1940	4,0					
	180	9,0	**7,45**	1907	4,0					
	194	8,4	**6,91**	1857	4,0					
	223	7,3	**6,00**	1770	4,0					
	241	6,8	**5,57**	1724	4,0					
	294	5,5	**4,56**	1612	4,0					
	344	4,7	**3,90**	1527	4,0					
	370	4,4	**3,62**	1488	4,0					
	408	3,9	**6,91**	1433	4,0	**MR002-G63/2a**	0,50	12	110	IE1
	470	3,4	**6,00**	1366	4,0	**NR002-G63/2a**		13		
	506	3,2	**5,57**	1332	4,0					
	619	2,6	**4,56**	1245	4,0					
	723	2,2	**3,90**	1181	4,0					
	779	2,0	**3,62**	1151	4,0					

*: Geared motor prices are different for IE2 and IE3 motors.

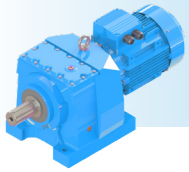

Power P_g [kW] P_g [HP]	IE3 Output Speeds n_2 [r.p.m]	IE3 Output Torque M_2 [Nm]	Ratio i	IE3 Radial Loads (Output) F_{qam} [N]	IE3 Service Factors f_s	Type	Rated Current [A]	Weight ~ [kg]	Dim. Page	* Motor Eff. Class
0,25 0,34	0,13	15953	**11443,34**	50996	0,8	**MR876-3E71M/4C**	0,67	612	136	IE3
	0,17	11653	**8345,18**	79805	1,1	**NR876-3E71M/4C**		627		
	0,20	10080	**7233,00**	87174	1,3	**MR876-2E71M/4B**	0,71	611		IE2
	0,23	8807	**6313,78**	92433	1,5	**NR876-2E71M/4B**		626		
	0,26	7774	**5569,66**	96350	1,7					
	0,29	6921	**4954,95**	99123	1,9					
	0,32	6203	**4438,59**	101418	2,1					
	0,37	5448	**3892,30**	103687	2,4					
	0,42	4824	**3441,02**	105462	2,7					
	0,50	4065	**2894,28**	107497	3,2					
	0,58	3463	**2460,65**	109026	3,8					
	0,68	2972	**2108,33**	112703	4,0					
	0,24	8300	**5949,83**	47686	1,0	**MR776-3E71M/4C**	0,67	260	133	IE3
	0,27	7349	**5260,00**	51346	1,1	**NR776-3E71M/4C**		322		
						MR776-2E71M/4B	0,71	259		IE2
						NR776-2E71M/4B		321		
	0,30	6877	**4812,09**	52918	1,2	**MR775-3E71M/4C**	0,67	257	133	IE3
	0,34	6093	**4263,81**	55512	1,3	**NR775-3E71M/4C**		318		
	0,38	5454	**3814,39**	57388	1,5	**MR775-2E71M/4B**	0,71	258		IE2
	0,46	4451	**3103,85**	59975	1,8	**NR775-2E71M/4B**		317		
	0,53	3842	**2684,10**	61455	2,1					
	0,62	3330	**2324,10**	62616	2,4					
	0,71	2915	**2032,66**	63505	2,7					
	0,80	2571	**1791,91**	64207	3,1					
	0,90	2283	**1589,68**	64804	3,5					
	1,0	2037	**1417,41**	65267	3,9					
	1,1	1803	**1252,60**	67039	4,0					
	0,43	4687	**3342,43**	23925	0,9	**MR676-3E71M/4C**	0,67	232	130	IE3
	0,50	4023	**2863,86**	27958	1,1	**NR676-3E71M/4C**		244		
						MR676-2E71M/4B	0,71	231		IE2
						NR676-2E71M/4B		243		
	0,56	3699	**2578,93**	29635	1,2	**MR675-3E71M/4C**	0,67	230	130	IE3
	0,65	3145	**2196,86**	32126	1,4	**NR675-3E71M/4C**		245		
	0,76	2707	**1888,53**	33910	1,6	**MR675-2E71M/4B**	0,71	229		IE2
	0,88	2351	**1638,93**	35136	1,8	**NR675-2E71M/4B**		244		
	1,0	2057	**1432,74**	36125	2,1					
	1,1	1809	**1259,54**	36903	2,4					
	1,3	1602	**1113,08**	37520	2,7					
	1,4	1433	**995,91**	37997	3,0					
	1,6	1261	**874,56**	38465	3,4					
	2,0	1056	**730,46**	39205	4,0					
	0,76	2713	**1897,20**	21484	1,1	**MR575-3E71M/4C**	0,67	153	127	IE3
	0,86	2398	**1675,43**	23125	1,3	**NR575-3E71M/4C**		149		
	0,96	2132	**1489,14**	24354	1,4	**MR575-2E71M/4B**	0,71	152		IE2
	1,1	1805	**1259,61**	25710	1,7	**NR575-2E71M/4B**		148		
	1,3	1639	**1140,65**	26299	1,8					
	1,6	1309	**574,90**	27486	2,3	**MR574-3E71M/6D**	0,77	139	126	IE3
	1,9	1108	**485,89**	28085	2,7	**NR574-3E71M/6D**		135		
	2,3	919	**402,12**	28650	3,3	**MR574-2E71M/6C**	0,78	138		IE2
						NR574-2E71M/6C		134		
	2,5	848	**574,90**	28862	3,5	**MR574-3E71M/4C**	0,67	134	126	IE3
	3,0	718	**485,89**	29566	4,0	**NR574-3E71M/4C**		130		

*: Geared motor prices are different for IE2 and IE3 motors.

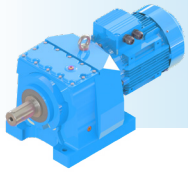

MR/MV/MN/NR/NV/NN - PERFORMANCE TABLES

Power P_g [kW] P_g [HP]	IE3 Output Speeds n_2 [r.p.m]	IE3 Output Torque M_2 [Nm]	Ratio i	IE3 Radial Loads (Output) F_{qam} [N]	IE3 Service Factors f_s	Type	Rated Current [A]	Weight ~ [kg]	Dim. Page	* Motor Eff. Class
0,25	2,5	848	**574,90**	28862	3,5	**MR574-2E71M/4B**	0,71	133	126	IE2
0,34	3,0	718	**485,89**	29566	4,0	**NR574-2E71M/4B**		129		
	1,1	1852	**1285,79**	9956	0,8	**MR475-3E71M/4C**	0,67	102	124	IE3
	1,2	1734	**1204,49**	12492	0,9	**NR475-3E71M/4C**		107		
						MR475-2E71M/4B	0,71	101		IE2
						NR475-2E71M/4B		106		
	1,4	1536	**674,46**	15720	1,0	**MR474-3E71M/6D**	0,77	97	123	IE3
	1,5	1373	**603,46**	17825	1,1	**NR474-3E71M/6D**		102		
	1,8	1208	**529,93**	19641	1,3	**MR474-2E71M/6C**	0,78	96		IE2
	2,1	1010	**442,61**	21487	1,5	**NR474-2E71M/6C**		101		
	2,1	996	**674,46**	21612	1,6	**MR474-3E71M/4C**	0,67	97	123	IE3
	2,4	890	**603,46**	22474	1,7	**NR474-3E71M/4C**		102		
	2,7	783	**529,93**	23243	2,0	**MR474-2E71M/4B**	0,71	96		IE2
	3,2	655	**442,61**	24138	2,4	**NR474-2E71M/4B**		101		
	3,4	619	**418,16**	24374	2,5					
	4,1	513	**346,07**	25032	3,0					
	2,2	958	**421,85**	9124	0,9	**MR374-3E71M/6D**	0,77	60	120	IE3
	2,5	841	**369,93**	11344	1,0	**NR374-3E71M/6D**		65		
						MR374-2E71M/6C	0,78	59		IE2
						NR374-2E71M/6C		64		
	2,7	771	**524,07**	12424	1,1	**MR374-3E71M/4C**	0,67	60	120	IE3
	3,4	621	**421,85**	14316	1,3	**NR374-3E71M/4C**		65		
	3,9	545	**369,93**	15160	1,5	**MR374-2E71M/4B**	0,71	59		IE2
	4,4	482	**327,04**	15771	1,7	**NR374-2E71M/4B**		64		
	5,2	406	**275,08**	16422	2,0					
	5,9	377	**157,76**	16059	2,2	**MR373-3E71M/6D**	0,77	60	119	IE3
	6,7	332	**138,72**	15496	2,5	**NR373-3E71M/6D**		65		
	8,3	268	**111,67**	14570	3,1	**MR373-2E71M/6C**	0,78	59		IE2
						NR373-2E71M/6C		64		
	9,1	244	**157,76**	14203	3,4	**MR373-3E71M/4C**	0,67	54	119	IE3
						NR373-3E71M/4C		59		
						MR373-2E71M/4B	0,71	53		IE2
						NR373-2E71M/4B		58		
	2,5	839	**368,77**	-	0,7	**MR284-3E71M/6D**	0,77	64	117	IE3
	2,9	736	**323,39**	5902	0,8	**NR284-3E71M/6D**		66		
						MR284-2E71M/6C	0,78	63		IE2
						NR284-2E71M/6C		65		
	3,3	636	**431,18**	8530	0,9	**MR284-3E71M/4C**	0,67	64	117	IE3
	3,9	543	**368,77**	10258	1,1	**NR284-3E71M/4C**		66		
	4,4	477	**323,39**	11268	1,3	**MR284-2E71M/4B**	0,71	63		IE2
	5,0	422	**285,89**	11998	1,4	**NR284-2E71M/4B**		65		
	6,0	356	**240,47**	12782	1,7					
	6,7	330	**137,91**	12726	1,8	**MR283-3E71M/6D**	0,77	32	116	IE3
	8,1	274	**114,14**	12099	2,2	**NR283-3E71M/6D**		34		
	9,5	234	**97,62**	11590	2,6	**MR283-2E71M/6C**	0,78	31		IE2
						NR283-2E71M/6C		33		

*: Geared motor prices are different for IE2 and IE3 motors.

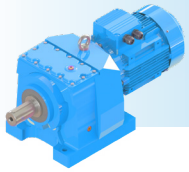

Power P_g [kW] P_g [HP]	IE3 Output Speeds n_2 [r.p.m]	IE3 Output Torque M_2 [Nm]	Ratio i	IE3 Radial Loads (Output) F_{qam} [N]	IE3 Service Factors f_s	Type	Rated Current [A]	Weight ~ [kg]	Dim. Page	* Motor Eff. Class
0,25 0,34	10 13	214 177	**137,91** **114,14**	11308 10715	2,8 3,4	**MR283-3E71M/4C** **NR283-3E71M/4C** **MR283-2E71M/4B** **NR283-2E71M/4B**	0,67 0,71	32 34 31 33	116	IE3 IE2
	4,0 4,3 5,7	516 480 364	**358,33** **332,52** **252,20**	6211 6518 7338	0,9 0,9 1,2	**MR275-3E71M/4C** **NR275-3E71M/4C** **MR275-2E71M/4B** **NR275-2E71M/4B**	0,67 0,71	47 49 46 48	115	IE3 IE2
	6,7 7,7 8,2 9,6	332 290 272 232	**138,55** **121,03** **113,52** **96,52**	7529 7762 7855 8057	1,4 1,6 1,7 1,9	**MR273-3E71M/6D** **NR273-3E71M/6D** **MR273-2E71M/6C** **NR273-2E71M/6C**	0,77 0,78	32 34 31 33	114	IE3 IE2
	10 12 13 15 17	215 188 176 150 130	**138,55** **121,03** **113,52** **96,52** **83,83**	8128 8249 8299 8413 8486	2,1 2,4 2,6 3,0 3,4	**MR273-3E71M/4C** **NR273-3E71M/4C** **MR273-2E71M/4B** **NR273-2E71M/4B**	0,67 0,71	32 34 31 33	114	IE3 IE2
	14 16 17	163 143 134	**68,03** **59,43** **55,74**	8313 8306 8159	1,7 2,0 2,1	**MR203-3E71M/6D** **NR203-3E71M/6D** **MR203-2E71M/6C** **NR203-2E71M/6C**	0,77 0,78	30 32 29 31	113	IE3 IE2
	21 24 26 30	106 93 87 74	**68,03** **59,43** **55,74** **47,39**	7635 7342 7206 6868	2,6 3,0 3,2 3,8	**MR203-3E71M/4C** **NR203-3E71M/4C** **MR203-2E71M/4B** **NR203-2E71M/4B**	0,67 0,71	30 32 29 31	113	IE3 IE2
	9,4 11	237 210	**99,21** **87,60**	5448 5550	0,8 1,0	**MR173-3E71M/6D** **NR173-3E71M/6D** **MR173-2E71M/6C** **NR173-2E71M/6C**	0,77 0,78	19 21 18 20	113	IE3 IE2
	14 16 18 21 25 29 31 33 40	154 136 127 107 90 78 71 67 56	**99,21** **87,60** **81,82** **69,16** **57,76** **49,81** **45,90** **42,87** **36,24**	5213 5070 4991 4794 4582 4408 4313 4234 4043	1,3 1,5 1,6 1,9 2,2 2,6 2,8 3,0 3,5	**MR173-3E71M/4C** **NR173-3E71M/4C** **MR173-2E71M/4B** **NR173-2E71M/4B**	0,67 0,71	20 21 19 20	112	IE3 IE2
	18 21 22	121 107 100	**50,51** **44,60** **41,66**	3300 3224 3180	1,2 1,3 1,4	**MR103-3E71M/6D** **NR103-3E71M/6D** **MR103-2E71M/6C** **NR103-2E71M/6C**	0,77 0,78	19 21 18 20	111	IE3 IE2
	28 32 34 41 44 49	79 69 65 55 50 46	**50,51** **44,60** **41,66** **35,21** **32,25** **29,40**	3020 2935 2888 2771 2710 2646	1,8 2,0 2,2 2,6 2,8 3,0	**MR103-3E71M/4C** **NR103-3E71M/4C** **MR103-2E71M/4B** **NR103-2E71M/4B**	0,67 0,71	18 19 17 18	111	IE3 IE2

*: Geared motor prices are different for IE2 and IE3 motors.

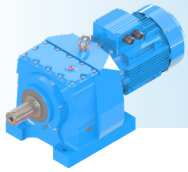

MR/MV/MN/NR/NV/NN - PERFORMANCE TABLES

Power P_g [kW] P_g [HP]	IE3 Output Speeds n_2 [r.p.m]	IE3 Output Torque M_2 [Nm]	Ratio i	IE3 Radial Loads (Output) F_{qam} [N]	IE3 Service Factors f_s	Type	Rated Current [A]	Weight ~ [kg]	Dim. Page	* Motor Eff. Class
0,25 0,34	57	39	**24,86**	2508	3,3	**MR103-3E71M/4C** **NR103-3E71M/4C** **MR103-2E71M/4B** **NR103-2E71M/4B**	0,67 0,71	18 19 17 18	111	IE3 IE2
	21 23 29	108 96 77	**45,18** **40,04** **32,02**	1892 2009 2248	0,8 0,9 1,1	**MR003-3E71M/6D** **NR003-3E71M/6D** **MR003-2E71M/6C** **NR003-2E71M/6C**	0,77 0,78	15 16 14 15	110	IE3 IE2
	32 36 45 51 59 68 69 75 79 85 98 105	70 62 50 44 38 33 32 30 28 26 23 21	**45,18** **40,04** **32,02** **28,38** **24,13** **21,26** **20,66** **19,17** **18,20** **16,89** **14,67** **13,61**	2304 2337 2418 2410 2406 2364 2385 2370 2335 2317 2248 2226	1,2 1,3 1,7 1,9 2,2 2,5 2,5 2,7 2,9 3,1 3,6 3,8	**MR003-3E71M/4C** **NR003-3E71M/4C** **MR003-2E71M/4B** **NR003-2E71M/4B**	0,67 0,71	14 15 13 14	110	IE3 IE2
	129 145 165 170 183 193 208 239 258 315 368 397	18 16 14 13 12 12 11 10 9 7 6 6	**11,14** **9,87** **8,70** **8,45** **7,84** **7,45** **6,91** **6,00** **5,57** **4,56** **3,90** **3,62**	2172 2080 1990 1967 1915 1881 1832 1745 1699 1588 1503 1464	3,7 4,0 4,0 4,0 4,0 4,0 4,0 4,0 4,0 4,0 4,0 4,0	**MR002-3E71M/4C** **NR002-3E71M/4C** **MR002-2E71M/4B** **NR002-2E71M/4B**	0,67 0,71	14 15 13 14	110	IE3 IE2
	411 473 510 623 728 785	5 5 4 4 3 3	**6,91** **6,00** **5,57** **4,56** **3,90** **3,62**	1439 1372 1337 1250 1184 1154	4,0 4,0 4,0 4,0 4,0 4,0	**MR002-G63/2b** **NR002-G63/2b**	0,67	13 14	110	IE1
0,37 0,50	0,20 0,23 0,26 0,29 0,32 0,37 0,42 0,50 0,58 0,68	15380 13437 11862 10559 9464 8312 7360 6203 5283 4535	**7233,00** **6313,78** **5569,66** **4954,95** **4438,59** **3892,30** **3441,02** **2894,28** **2460,65** **2108,33**	56000 69831 78738 85048 89697 94366 97651 101417 104164 106252	0,8 1,0 1,1 1,2 1,4 1,6 1,8 2,1 2,5 2,9	**MR876-3E71M/4D** **NR876-3E71M/4D** **MR876-2E71M/4C** **NR876-2E71M/4C**	0,97 1,00	600 612 599 611	136	IE3 IE2
	0,75 0,84 0,94	4223 3738 3345	**1924,32** **1700,56** **1521,55**	107085 108338 109316	3,1 3,5 3,9	**MR875-3E71M/4D** **NR875-3E71M/4D** **MR875-2E71M/4C** **NR875-2E71M/4C**	0,97 1,00	597 607 596 606	136	IE3 IE2

*: Geared motor prices are different for IE2 and IE3 motors.

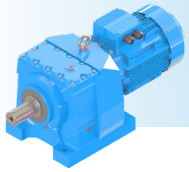

Power P_g [kW] P_g [HP]	IE3 Output Speeds n_2 [r.p.m]	IE3 Output Torque M_2 [Nm]	Ratio i	IE3 Radial Loads (Output) F_{qam} [N]	IE3 Service Factors f_s	Type	Rated Current [A]	Weight ~ [kg]	Dim. Page	* Motor Eff. Class
0,37	0,38	8322	**3814,39**	47598	1,0	**MR775-3E71M/4D**	0,97	265	133	IE3
0,50	0,46	6791	**3103,85**	53223	1,2	**NR775-3E71M/4D**		323		
	0,53	5862	**2684,10**	56209	1,4	**MR775-2E71M/4C**	1,00	264		IE2
	0,62	5081	**2324,10**	58419	1,6	**NR775-2E71M/4C**		322		
	0,71	4447	**2032,66**	59983	1,8					
	0,80	3923	**1791,91**	61263	2,0					
	0,90	3483	**1589,68**	62276	2,3					
	1,0	3107	**1417,41**	63098	2,6					
	1,1	2751	**1252,60**	63844	2,9					
	1,3	2462	**1120,74**	64424	3,2					
	1,5	2166	**984,18**	65025	3,7					
	1,6	2072	**594,92**	65180	3,9	**MR774-3E80M/6B**	1,03	245	132	IE3
	1,7	1855	**532,29**	66612	4,0	**NR774-3E80M/6B**		302		
						MR774-2E80M/6A	1,08	244		IE2
						NR774-2E80M/6A		301		
	0,76	4130	**1888,53**	27370	1,0	**MR675-3E71M/4D**	0,97	229	130	IE3
	0,88	3587	**1638,93**	30178	1,2	**NR675-3E71M/4D**		245		
	1,0	3138	**1432,74**	32158	1,4	**MR675-2E71M/4C**	1,00	228		IE2
	1,1	2761	**1259,54**	33706	1,6	**NR675-2E71M/4C**		244		
	1,3	2444	**1113,08**	34869	1,8					
	1,4	2187	**995,91**	35696	2,0					
	1,6	1924	**874,56**	36548	2,2					
	1,9	1742	**500,39**	37113	2,5	**MR674-3E80M/6B**	1,03	219	129	IE3
	2,1	1542	**442,20**	37697	2,8	**NR674-3E80M/6B**		235		
	2,5	1312	**376,69**	38334	3,3	**MR674-2E80M/6A**	1,08	218		IE2
	2,9	1130	**323,82**	38814	3,8	**NR674-2E80M/6A**		234		
	3,3	982	**281,02**	40076	4,0					
	1,1	2754	**1259,61**	21254	1,1	**MR575-3E71M/4D**	0,97	153	127	IE3
	1,3	2500	**1140,65**	22616	1,2	**NR575-3E71M/4D**		150		
	1,5	2115	**964,05**	24428	1,4	**MR575-2E71M/4C**	1,00	152		IE2
						NR575-2E71M/4C		149		
	1,6	1997	**574,90**	24897	1,5	**MR574-3E80M/6B**	1,03	139	126	IE3
	1,9	1690	**485,89**	26116	1,8	**NR574-3E80M/6B**		135		
	2,3	1402	**402,12**	27150	2,1	**MR574-2E80M/6A**	1,08	138		IE2
						NR574-2E80M/6A		134		
	2,5	1294	**574,90**	27504	2,3	**MR574-3E71M/4D**	0,97	134	126	IE3
	3,0	1095	**485,89**	28136	2,7	**NR574-3E71M/4D**		130		
	3,6	909	**402,12**	28679	3,3	**MR574-2E71M/4C**	1,00	133		IE2
	4,2	778	**343,91**	29072	3,9	**NR574-2E71M/4C**		129		
	4,8	683	**301,59**	29992	4,0					
	4,9	659	**291,25**	30274	4,0					
	1,8	1843	**529,93**	10176	0,8	**MR474-3E80M/6B**	1,03	137	123	IE3
	2,1	1541	**442,61**	15686	1,0	**NR474-3E80M/6B**		142		
						MR474-2E80M/6A	1,08	136		IE2
						NR474-2E80M/6A		141		
	2,1	1519	**674,46**	15971	1,0	**MR474-3E71M/4D**	0,97	132	123	IE3
	2,4	1358	**603,46**	18007	1,1	**NR474-3E71M/4D**		137		
	2,7	1194	**529,93**	19777	1,3	**MR474-2E71M/4C**	1,00	131		IE2
	3,2	999	**442,61**	21584	1,6	**NR474-2E71M/4C**		136		
	3,4	944	**418,16**	22042	1,6					

*: Geared motor prices are different for IE2 and IE3 motors.

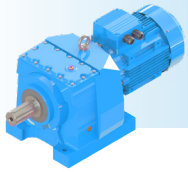

MR/MV/MN/NR/NV/NN - PERFORMANCE TABLES

Power P_g [kW] P_g [HP]	IE3 Output Speeds n_2 [r.p.m]	IE3 Output Torque M_2 [Nm]	Ratio i	IE3 Radial Loads (Output) F_{qam} [N]	IE3 Service Factors f_s	Type	Rated Current [A]	Weight ~ [kg]	Dim. Page	* Motor Eff. Class
0,37 0,50	4,1	783	**346,07**	23240	2,0	**MR474-3E71M/4D**	0,97	132	123	IE3
						NR474-3E71M/4D		137		
						MR474-2E71M/4C	1,00	131		IE2
						NR474-2E71M/4C		136		
	4,2	776	**219,00**	23300	2,0	**MR473-3E80M/6B**	1,03	87	122	IE3
	4,8	688	**194,05**	23923	2,3	**NR473-3E80M/6B**		90		
	5,9	561	**157,90**	24750	2,8	**MR473-2E80M/6A**	1,08	86		IE2
	6,7	496	**139,54**	25142	3,1	**NR473-2E80M/6A**		89		
	7,4	444	**124,85**	25445	3,5					
	3,4	948	**421,85**	9355	0,9	**MR374-3E71M/4D**	0,97	60	120	IE3
	3,9	832	**369,93**	11517	1,0	**NR374-3E71M/4D**		65		
	4,4	736	**327,04**	12918	1,1	**MR374-2E71M/4C**	1,00	59		IE2
	5,2	620	**275,08**	14359	1,3	**NR374-2E71M/4C**		64		
	5,9	558	**157,76**	15027	1,5	**MR373-3E80M/6B**	1,03	65	119	IE3
	6,7	491	**138,72**	14902	1,7	**NR373-3E80M/6B**		70		
	8,3	396	**111,67**	14092	2,1	**MR373-2E80M/6A**	1,08	64		IE2
						NR373-2E80M/6A		69		
	9,1	363	**157,76**	13765	2,3	**MR373-3E71M/4D**	0,97	54	119	IE3
	10	319	**138,72**	13294	2,6	**NR373-3E71M/4D**		59		
	13	257	**111,67**	12515	3,2	**MR373-2E71M/4C**	1,00	53		IE2
	15	226	**97,92**	12056	3,6	**NR373-2E71M/4C**		58		
	5,0	644	**285,89**	8353	0,9	**MR284-3E71M/4D**	0,97	64	117	IE3
						NR284-3E71M/4D		66		
						MR284-2E71M/4C	1,00	63		IE2
						NR284-2E71M/4C		65		
	6,7	488	**137,91**	11107	1,2	**MR283-3E80M/6B**	1,03	44	116	IE3
	8,1	405	**114,14**	11559	1,5	**NR283-3E80M/6B**		46		
	9,5	346	**97,62**	11129	1,7	**MR283-2E80M/6A**	1,08	43		IE2
						NR283-2E80M/6A		45		
	10	317	**137,91**	10885	1,9	**MR283-3E71M/4D**	0,97	40	116	IE3
	13	263	**114,14**	10365	2,3	**NR283-3E71M/4D**		43		
	15	225	**97,62**	9940	2,7	**MR283-2E71M/4C**	1,00	39		IE2
	17	198	**85,60**	9588	3,0	**NR283-2E71M/4C**		42		
	6,7	491	**138,55**	6429	0,9	**MR273-3E80M/6B**	1,03	32	114	IE3
	7,7	429	**121,03**	6901	1,0	**NR273-3E80M/6B**		35		
	8,2	403	**113,52**	7085	1,1	**MR273-2E80M/6A**	1,08			IE2
	9,6	342	**96,52**	7456	1,3	**NR273-2E80M/6A**				
	10	319	**138,55**	7603	1,4	**MR273-3E71M/4D**	0,97	30	114	IE3
	12	279	**121,03**	7811	1,6	**NR273-3E71M/4D**		33		
	13	262	**113,52**	7900	1,7	**MR273-2E71M/4C**	1,00	29		IE2
	15	223	**96,52**	8092	2,0	**NR273-2E71M/4C**		32		
	17	194	**83,83**	8224	2,3					
	20	170	**73,35**	8328	2,7					
	24	140	**60,66**	7788	3,2					

*: Geared motor prices are different for IE2 and IE3 motors.

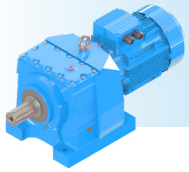

Power P_g [kW] P_g [HP]	IE3 Output Speeds n_2 [r.p.m]	IE3 Output Torque M_2 [Nm]	Ratio i	IE3 Radial Loads (Output) F_{qam} [N]	IE3 Service Factors f_s	Type	Rated Current [A]	Weight ~ [kg]	Dim. Page	* Motor Eff. Class
0,37	14	242	**68,03**	8002	1,2	**MR203-3E80M/6B**	1,03	37	113	IE3
0,50	16	211	**59,43**	7965	1,3	**NR203-3E80M/6B**		39		
	17	198	**55,74**	7840	1,4	**MR203-2E80M/6A**	1,08	36		IE2
						NR203-2E80M/6A		38		
	21	157	**68,03**	7382	1,8	**MR203-3E71M/4D**	0,97	35	113	IE3
	24	137	**59,43**	7121	2,0	**NR203-3E71M/4D**		38		
	26	129	**55,74**	6998	2,2	**MR203-2E71M/4C**	1,00	34		IE2
	30	110	**47,39**	6692	2,6	**NR203-2E71M/4C**		37		
	33	102	**43,94**	6552	2,7					
	35	95	**41,16**	6432	2,9					
	40	84	**36,02**	6190	3,4					
	14	228	**99,21**	4779	0,9	**MR173-3E71M/4D**	0,97	20	112	IE3
	16	202	**87,60**	4687	1,0	**NR173-3E71M/4D**		21		
	18	189	**81,82**	4633	1,1	**MR173-2E71M/4C**	1,00	19		IE2
	21	159	**69,16**	4491	1,3	**NR173-2E71M/4C**		20		
	25	133	**57,76**	4329	1,5					
	29	115	**49,81**	4190	1,7					
	31	106	**45,90**	4112	1,9					
	33	99	**42,87**	4047	2,0					
	40	84	**36,24**	3884	2,4					
	47	70	**30,26**	3710	2,9					
	55	61	**26,10**	3568	3,3					
	18	179	**50,51**	2938	0,8	**MR103-3E80M/6B**	1,03	22	111	IE3
	21	159	**44,60**	2904	0,9	**NR103-3E80M/6B**		24		
	22	148	**41,66**	2881	0,9	**MR103-2E80M/6A**	1,08	21		IE2
						NR103-2E80M/6A		23		
	28	117	**50,51**	2785	1,2	**MR103-3E71M/4D**	0,97	19	111	IE3
	32	103	**44,60**	2727	1,4	**NR103-3E71M/4D**		20		
	34	96	**41,66**	2694	1,5	**MR103-2E71M/4C**	1,00	18		IE2
	41	81	**35,21**	2607	1,7	**NR103-2E71M/4C**		19		
	44	75	**32,25**	2560	1,9					
	49	68	**29,40**	2509	2,1					
	58	57	**24,86**	2374	2,3					
	65	51	**21,96**	2308	2,4					
	70	48	**20,51**	2272	2,5					
	83	40	**17,33**	2181	2,7					
	90	37	**15,95**	2161	3,1	**MR102-3E71M/4D**	0,97	19	111	IE3
	102	33	**14,08**	2091	3,3	**NR102-3E71M/4D**		20		
	109	31	**13,15**	2053	3,4	**MR102-2E71M/4C**	1,00	18		IE2
						NR102-2E71M/4C		19		
	32	104	**45,18**	1350	0,8	**MR003-3E71M/4D**	0,97	15	110	IE3
	36	92	**40,04**	1480	0,9	**NR003-3E71M/4D**		16		
	45	74	**32,02**	1741	1,1	**MR003-2E71M/4C**	1,00	14		IE2
	51	66	**28,38**	1803	1,3	**NR003-2E71M/4C**		15		
	59	56	**24,13**	1890	1,5					
	68	49	**21,26**	1896	1,7					
	69	48	**20,66**	1943	1,7					
	75	44	**19,17**	1960	1,8					
	79	42	**18,20**	1935	1,9					
	85	39	**16,89**	1946	2,1					
	98	34	**14,67**	1911	2,4					
	105	32	**13,61**	1913	2,5					

*: Geared motor prices are different for IE2 and IE3 motors.

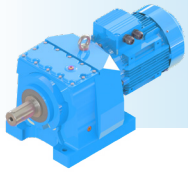

MR/MV/MN/NR/NV/NN - PERFORMANCE TABLES

Power P_g [kW] P_g [HP]	IE3 Output Speeds n_2 [r.p.m]	IE3 Output Torque M_2 [Nm]	Ratio i	IE3 Radial Loads (Output) F_{qam} [N]	IE3 Service Factors f_s	Type	Rated Current [A]	Weight ~ [kg]	Dim. Page	* Motor Eff. Class
0,37	129	26	**11,14**	2084	2,5	**MR002-3E71M/4D**	0,97	15	110	IE3
0,50	145	23	**9,87**	2038	3,4	**NR002-3E71M/4D**		16		
	165	20	**8,70**	1981	3,6	**MR002-2E71M/4C**	1,00	14		IE2
	170	20	**8,45**	1987	3,7	**NR002-2E71M/4C**		15		
	183	18	**7,84**	1950	3,9					
	193	18	**7,45**	1916	4,0					
	208	16	**6,91**	1864	4,0					
	239	14	**6,00**	1774	4,0					
	258	13	**5,57**	1726	4,0					
	315	11	**4,56**	1614	4,0					
	368	9	**3,90**	1525	4,0					
	397	9	**3,62**	1484	4,0					
	410	8	**6,91**	1458	4,0	**MR002-3E71M/2B**	0,86	15	110	IE3
	472	7	**6,00**	1388	4,0	**NR002-3E71M/2B**		16		
	508	7	**5,57**	1352	4,0	**MR002-2E71M/2A**	0,90	14		IE2
	621	5	**4,56**	1264	4,0	**NR002-2E71M/2A**		15		
	726	5	**3,90**	1197	4,0					
	782	4	**3,62**	1166	4,0					
0,55	0,21	21545	**6842,29**	68090	0,8	**MR976-3E80M/4C**	1,34	1103	139	IE3
0,75	0,27	16906	**5357,43**	101458	1,1	**NR976-3E80M/4C**		1153		
	0,32	14152	**4474,67**	115408	1,3	**MR976-2E80M/4B**	1,45	1102		IE2
	0,34	13380	**4227,50**	118840	1,3	**NR976-2E80M/4B**		1152		
	0,40	11392	**3594,81**	126893	1,6					
	0,51	9019	**2836,64**	135261	2,0					
	0,71	6576	**2027,97**	142495	2,7	**MR975-3E80M/4C**	1,34	1101	139	IE3
	0,80	5908	**1820,78**	144369	3,0	**NR975-3E80M/4C**		1151		
	0,93	5033	**1552,10**	146710	3,6	**MR975-2E80M/4B**	1,45	1100		IE2
						NR975-2E80M/4B		1150		
	0,29	15534	**4954,95**	54775	0,8	**MR876-3E80M/4C**	1,34	603	136	IE3
	0,33	13922	**4438,59**	66738	0,9	**NR876-3E80M/4C**		613		
	0,37	12229	**3892,30**	76803	1,1	**MR876-2E80M/4B**	1,45	602		IE2
	0,42	10827	**3441,02**	83816	1,2	**NR876-2E80M/4B**		612		
	0,50	9125	**2894,28**	91140	1,4					
	0,59	7772	**2460,65**	96066	1,7					
	0,69	6671	**2108,33**	99936	1,9					
	0,75	6212	**1924,32**	101388	2,1	**MR875-3E80M/4C**	1,34	599	136	IE3
	0,85	5499	**1700,56**	103540	2,4	**NR875-3E80M/4C**		609		
	0,95	4921	**1521,55**	105192	2,6	**MR875-2E80M/4B**	1,45	598		IE2
	1,1	4328	**1336,15**	106805	3,0	**NR875-2E80M/4B**		608		
	1,2	3924	**1210,51**	107862	3,3					
	1,4	3395	**1049,18**	109192	3,8					
	0,62	7474	**2324,10**	50893	1,1	**MR775-3E80M/4C**	1,34	340	133	IE3
	0,71	6542	**2032,66**	54099	1,2	**NR775-3E80M/4C**		415		
	0,81	5772	**1791,91**	56474	1,4	**MR775-2E80M/4B**	1,45	339		IE2
	0,91	5124	**1589,68**	58302	1,6	**NR775-2E80M/4B**		414		
	1,0	4571	**1417,41**	59749	1,8					
	1,2	4047	**1252,60**	61036	2,0					
	1,3	3622	**1120,74**	61934	2,2					
	1,5	3186	**984,18**	62905	2,5					

*: Geared motor prices are different for IE2 and IE3 motors.

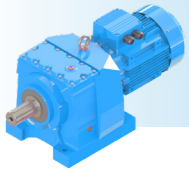

Power P_g [kW] P_g [HP]	IE3 Output Speeds n_2 [r.p.m]	IE3 Output Torque M_2 [Nm]	Ratio i	IE3 Radial Loads (Output) F_{qam} [N]	IE3 Service Factors f_s	Type	Rated Current [A]	Weight ~ [kg]	Dim. Page	* Motor Eff. Class
0,55 0,75	1,6	3064	**594,92**	63237	2,6	**MR774-3E80M/6C**	1,47	318	132	IE3
	1,8	2742	**532,29**	63901	2,9	**NR774-3E80M/6C**		393		
	2,0	2412	**467,43**	64555	3,3	**MR774-2E80M/6B**	1,50	318		IE2
	2,2	2160	**418,17**	65036	3,7	**NR774-2E80M/6B**		393		
	2,4	1976	**594,92**	65557	4,0	**MR774-3E80M/4C**	1,34	315	132	IE3
	2,7	1768	**532,29**	67316	4,0	**NR774-3E80M/4C**		391		
						MR774-2E80M/4B	1,45	314		IE2
						NR774-2E80M/4B		390		
	1,0	4616	**1432,74**	24312	0,9	**MR675-3E80M/4C**	1,34	245	130	IE3
	1,2	4061	**1259,54**	27791	1,1	**NR675-3E80M/4C**		255		
	1,3	3595	**1113,08**	30140	1,2	**MR675-2E80M/4B**	1,45	244		IE2
	1,5	3218	**995,91**	31852	1,3	**NR675-2E80M/4B**		254		
	1,7	2831	**874,56**	33435	1,5					
	1,9	2576	**500,39**	34368	1,7	**MR674-3E80M/6C**	1,47	223	129	IE3
	2,1	2280	**442,20**	35434	1,9	**NR674-3E80M/6C**		233		
	2,5	1940	**376,69**	36540	2,2	**MR674-2E80M/6B**	1,50	223		IE2
						NR674-2E80M/6B		233		
	2,9	1661	**500,39**	37329	2,6	**MR674-3E80M/4C**	1,34	220	129	IE3
	3,3	1471	**442,20**	37879	2,9	**NR674-3E80M/4C**		231		
	3,8	1251	**376,69**	38481	3,4	**MR674-2E80M/4B**	1,45	219		IE2
	4,5	1077	**323,82**	38934	4,0	**NR674-2E80M/4B**		230		
	5,2	936	**281,02**	40572	4,0					
	1,6	2953	**574,90**	20079	1,0	**MR574-3E80M/6C**	1,47	153	126	IE3
	1,9	2499	**485,89**	22620	1,2	**NR574-3E80M/6C**		149		
	2,3	2073	**402,12**	24611	1,4	**MR574-2E80M/6B**	1,50	153		IE2
						NR574-2E80M/6B		149		
	2,5	1904	**574,90**	25317	1,6	**MR574-3E80M/4C**	1,34	151	126	IE3
	3,0	1611	**485,89**	26441	1,9	**NR574-3E80M/4C**		146		
	3,6	1337	**402,12**	27394	2,2	**MR574-2E80M/4B**	1,45	150		IE2
	4,2	1144	**343,91**	27973	2,6	**NR574-2E80M/4B**		145		
	4,8	1005	**301,59**	28399	3,0					
	5,0	969	**291,25**	28504	3,1					
	5,6	863	**258,87**	28839	3,5					
	6,5	738	**221,40**	29303	4,0					
	7,5	649	**194,15**	30390	4,0					
	2,7	1769	**529,93**	12048	0,9	**MR474-3E80M/4C**	1,34	133	123	IE3
	3,3	1480	**442,61**	16591	1,1	**NR474-3E80M/4C**		137		
	3,4	1399	**418,16**	17641	1,1	**MR474-2E80M/4B**	1,45	132		IE2
	4,2	1160	**346,07**	20191	1,3	**NR474-2E80M/4B**		136		
	4,3	1150	**219,00**	20209	1,3	**MR473-3E80M/6C**	1,47	111	122	IE3
	4,8	1019	**194,05**	21411	1,5	**NR473-3E80M/6C**		114		
	5,9	831	**157,90**	22920	1,9	**MR473-2E80M/6B**	1,50	111		IE2
						NR473-2E80M/6B		114		
	6,6	743	**219,00**	23568	2,1	**MR473-3E80M/4C**	1,34	111	122	IE3
	7,5	658	**194,05**	24146	2,4	**NR473-3E80M/4C**		114		
	9,2	537	**157,90**	24420	2,9	**MR473-2E80M/4B**	1,45	110		IE2
	10	475	**139,54**	23561	3,3	**NR473-2E80M/4B**		113		
	12	425	**124,85**	22805	3,6					

*: Geared motor prices are different for IE2 and IE3 motors.

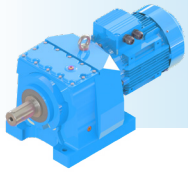

MR/MV/MN/NR/NV/NN - PERFORMANCE TABLES

Power P_g [kW] P_g [HP]	IE3 Output Speeds n_2 [r.p.m]	IE3 Output Torque M_2 [Nm]	Ratio i	IE3 Radial Loads (Output) F_{qam} [N]	IE3 Service Factors f_s	Type	Rated Current [A]	Weight ~ [kg]	Dim. Page	* Motor Eff. Class
0,55 0,75	5,3	912	**275,08**	10080	0,9	**MR374-3E80M/4C**	1,34	66	120	IE3
						NR374-3E80M/4C		70		
						MR374-2E80M/4B	1,45	65		IE2
						NR374-2E80M/4B		69		
	5,9	827	**157,76**	11575	1,0	**MR373-3E80M/6C**	1,47	58	119	IE3
	6,7	728	**138,72**	13026	1,1	**NR373-3E80M/6C**		61		
	8,4	586	**111,67**	13358	1,4	**MR373-2E80M/6B**	1,50	58		IE2
						NR373-2E80M/6B		61		
	9,2	534	**157,76**	13077	1,5	**MR373-3E80M/4C**	1,34	66	119	IE3
	10	470	**138,72**	12684	1,7	**NR373-3E80M/4C**		70		
	13	379	**111,67**	12018	2,2	**MR373-2E80M/4B**	1,45	65		IE2
	15	333	**97,92**	11616	2,5	**NR373-2E80M/4B**		69		
	17	294	**86,57**	11242	2,8					
	20	248	**72,81**	10724	3,3					
	23	211	**61,91**	10249	3,9					
	6,8	724	**137,91**	6313	0,8	**MR283-3E80M/6C**	1,47	46	116	IE3
	8,2	600	**114,14**	9261	1,0	**NR283-3E80M/6C**		49		
	9,6	513	**97,62**	10425	1,2	**MR283-2E80M/6B**	1,50	46		IE2
						NR283-2E80M/6B		49		
	11	467	**137,91**	10229	1,3	**MR283-3E80M/4C**	1,34	48	116	IE3
	13	387	**114,14**	9817	1,5	**NR283-3E80M/4C**		51		
	15	331	**97,62**	9468	1,8	**MR283-2E80M/4B**	1,45	47		IE2
	17	291	**85,60**	9171	2,1	**NR283-2E80M/4B**		50		
	19	258	**75,68**	8892	2,3					
	23	217	**63,65**	8502	2,8					
	27	185	**54,12**	8140	3,2					
	9,7	507	**96,52**	6289	0,9	**MR273-3E80M/6C**	1,47	31	114	IE3
						NR273-3E80M/6C		34		
						MR273-2E80M/6B	1,50	31		IE2
						NR273-2E80M/6B		34		
	10	470	**138,55**	6598	1,0	**MR273-3E80M/4C**	1,34	33	114	IE3
	12	411	**121,03**	7030	1,1	**NR273-3E80M/4C**		36		
	13	385	**113,52**	7199	1,2	**MR273-2E80M/4B**	1,45	32		IE2
	15	328	**96,52**	7553	1,4	**NR273-2E80M/4B**		35		
	17	285	**83,83**	7789	1,6					
	20	250	**73,35**	7970	1,8					
	24	207	**60,66**	7896	2,2					
	29	173	**50,59**	7388	2,6					
	34	145	**42,41**	6930	3,1					
	40	125	**36,55**	6568	3,6					
	14	358	**68,03**	7417	0,8	**MR203-3E80M/6C**	1,47	34	113	IE3
	16	313	**59,43**	7446	0,9	**NR203-3E80M/6C**		35		
	17	294	**55,74**	7352	1,0	**MR203-2E80M/6B**	1,50	34		IE2
						NR203-2E80M/6B		35		
	21	231	**68,03**	6986	1,2	**MR203-3E80M/4C**	1,34	34	113	IE3
	24	202	**59,43**	6773	1,4	**NR203-3E80M/4C**		36		
	26	190	**55,74**	6671	1,5	**MR203-2E80M/4B**	1,45	33		IE2
	31	161	**47,39**	6411	1,7	**NR203-2E80M/4B**		35		
	33	150	**43,94**	6290	1,9					
	35	140	**41,16**	6185	2,0					

*: Geared motor prices are different for IE2 and IE3 motors.

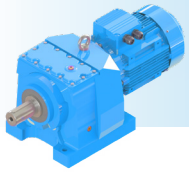

Power P_g [kW] P_g [HP]	IE3 Output Speeds n_2 [r.p.m]	IE3 Output Torque M_2 [Nm]	Ratio i	IE3 Radial Loads (Output) F_{qam} [N]	IE3 Service Factors f_s	Type	Rated Current [A]	Weight ~ [kg]	Dim. Page	* Motor Eff. Class
0,55	40	123	**36,02**	5973	2,3	**MR203-3E80M/4C**	1,34	34	113	IE3
0,75	51	97	**28,35**	6418	2,9	**NR203-3E80M/4C**		36		
	59	84	**24,77**	6107	3,3	**MR203-2E80M/4B**	1,45	33		IE2
	62	79	**23,23**	5966	3,4	**NR203-2E80M/4B**		35		
	21	235	**69,16**	4033	0,9	**MR173-3E80M/4C**	1,34	23	112	IE3
	25	196	**57,76**	3944	1,0	**NR173-3E80M/4C**		25		
	29	169	**49,81**	3857	1,2	**MR173-2E80M/4B**	1,45	22		IE2
	32	156	**45,90**	3804	1,3	**NR173-2E80M/4B**		24		
	34	146	**42,87**	3758	1,4					
	40	123	**36,24**	3639	1,6					
	48	103	**30,26**	3503	1,9					
	56	89	**26,10**	3388	2,2					
	69	72	**20,92**	3816	2,8	**MR172-3E80M/4C**	1,34	22	112	IE3
	79	63	**18,28**	3633	3,2	**NR172-3E80M/4C**		24		
						MR172-2E80M/4B	1,45	21		IE2
						NR172-2E80M/4B		23		
	29	172	**50,51**	2432	0,8	**MR103-3E80M/4C**	1,34	23	111	IE3
	33	152	**44,60**	2414	0,9	**NR103-3E80M/4C**		24		
	35	142	**41,66**	2401	1,0	**MR103-2E80M/4B**	1,45	22		IE2
	41	120	**35,21**	2358	1,2	**NR103-2E80M/4B**		23		
	45	110	**32,25**	2331	1,3					
	49	100	**29,40**	2300	1,4					
	58	85	**24,86**	2178	1,5					
	66	75	**21,96**	2134	1,6					
	71	70	**20,51**	2108	1,7					
	84	59	**17,33**	2042	1,9					
	91	55	**15,95**	2045	2,1	**MR102-3E80M/4C**	1,34	22	111	IE3
	103	49	**14,08**	1988	2,3	**NR102-3E80M/4C**		23		
	110	46	**13,15**	1956	2,3	**MR102-2E80M/4B**	1,45	21		IE2
	130	39	**11,12**	1877	2,6	**NR102-2E80M/4B**		22		
	142	35	**10,18**	1836	2,8					
	156	32	**9,29**	1793	2,9					
	181	28	**8,01**	1724	3,2					
	209	24	**6,93**	1641	3,7					
	45	109	**32,02**	746	0,8	**MR003-3E80M/4C**	1,34	19	110	IE3
	51	96	**28,38**	908	0,9	**NR003-3E80M/4C**		20		
	60	82	**24,13**	1128	1,0	**MR003-2E80M/4B**	1,45	18		IE2
	68	72	**21,26**	1206	1,1	**NR003-2E80M/4B**		19		
	70	70	**20,66**	1290	1,2					
	76	65	**19,17**	1353	1,3					
	80	62	**18,20**	1343	1,3					
	86	58	**16,89**	1396	1,4					
	99	50	**14,67**	1412	1,6					
	107	46	**13,61**	1450	1,7					
	130	38	**11,14**	1789	1,7	**MR002-3E80M/4C**	1,34	17	110	IE3
	147	34	**9,87**	1772	2,3	**NR002-3E80M/4C**		18		
	167	30	**8,70**	1738	2,5	**MR002-2E80M/4B**	1,45	16		IE2
	172	29	**8,45**	1758	2,5	**NR002-2E80M/4B**		17		
	185	27	**7,84**	1747	2,6					
	195	26	**7,45**	1719	2,8					
	210	24	**6,91**	1706	2,9					
	242	21	**6,00**	1651	3,2					
	260	19	**5,57**	1636	3,3					
	318	16	**4,56**	1528	3,7					

*: Geared motor prices are different for IE2 and IE3 motors.

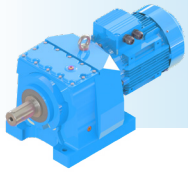

MR/MV/MN/NR/NV/NN - PERFORMANCE TABLES

Power P_g [kW] P_g [HP]	IE3 Output Speeds n_2 [r.p.m]	IE3 Output Torque M_2 [Nm]	Ratio i	IE3 Radial Loads (Output) F_{qam} [N]	IE3 Service Factors f_s	Type	Rated Current [A]	Weight ~ [kg]	Dim. Page	* Motor Eff. Class
0,55 0,75	372 401	14 13	**3,90** **3,62**	1494 1476	4,0 4,0	**MR002-3E80M/4C** **NR002-3E80M/4C** **MR002-2E80M/4B** **NR002-2E80M/4B**	1,34 1,45	17 18 16 17	110	IE3 IE2
	410 472 508 621 726 782	12 11 10 8 7 6	**6,91** **6,00** **5,57** **4,56** **3,90** **3,62**	1482 1410 1373 1283 1213 1181	4,0 4,0 4,0 4,0 4,0 4,0	**MR002-3E71M/2C** **NR002-3E71M/2C** **MR002-2E71M/2B** **NR002-2E71M/2B**	1,19 1,25	15 16 14 15	110	IE3 IE2
0,75 1,0	0,27 0,32 0,34 0,40 0,51	23053 19298 18245 15535 12298	**5357,43** **4474,67** **4227,50** **3594,81** **2836,64**	51426 86315 93574 108770 123352	0,8 0,9 1,0 1,2 1,5	**MR976-3E80M/4D** **NR976-3E80M/4D** **MR976-2E80M/4C** **NR976-2E80M/4C**	1,77 1,89	1093 1143 1092 1142	139	IE3 IE2
	0,71 0,80 0,93 1,1 1,2	8968 8057 6863 6056 5376	**2027,97** **1820,78** **1552,10** **1368,27** **1213,85**	135224 138145 141735 144020 145857	2,0 2,2 2,6 3,0 3,3	**MR975-3E80M/4D** **NR975-3E80M/4D** **MR975-2E80M/4C** **NR975-2E80M/4C**	1,77 1,89	1091 1141 1090 1140	139	IE3 IE2
	0,42 0,50 0,59 0,69	14764 12443 10599 9097	**3441,02** **2894,28** **2460,65** **2108,33**	60861 75635 84867 91252	0,9 1,0 1,2 1,4	**MR876-3E80M/4D** **NR876-3E80M/4D** **MR876-2E80M/4C** **NR876-2E80M/4C**	1,77 1,89	608 613 607 612	136	IE3 IE2
	0,75 0,85 0,95 1,1 1,2 1,4 1,6 1,8	8471 7498 6710 5902 5351 4630 4046 3573	**1924,32** **1700,56** **1521,55** **1336,15** **1210,51** **1049,18** **915,85** **807,91**	93667 97048 99810 102338 103968 105993 107547 108753	1,5 1,7 1,9 2,2 2,4 2,8 3,2 3,6	**MR875-3E80M/4D** **NR875-3E80M/4D** **MR875-2E80M/4C** **NR875-2E80M/4C**	1,77 1,89	605 610 604 609	136	IE3 IE2
	0,81 0,91 1,0 1,2 1,3 1,5	7871 6987 6234 5518 4939 4345	**1791,91** **1589,68** **1417,41** **1252,60** **1120,74** **984,18**	49401 52618 55079 57207 58706 60240	1,0 1,1 1,3 1,4 1,6 1,8	**MR775-3E80M/4D** **NR775-3E80M/4D** **MR775-2E80M/4C** **NR775-2E80M/4C**	1,77 1,89	260 318 259 317	133	IE3 IE2
	1,6 1,8 2,0 2,3	4134 3700 3255 2915	**594,92** **532,29** **467,43** **418,17**	60775 61799 62793 63516	1,9 2,2 2,5 2,7	**MR774-3E90S/6B** **NR774-3E90S/6B** **MR774-2E90S/6A** **NR774-2E90S/6A**	1,96 2,00	241 299 239 297	132	IE3 IE2
	2,4 2,7 3,1 3,5	2694 2411 2121 1900	**594,92** **532,29** **467,43** **418,17**	63960 64524 65082 66231	3,0 3,3 3,8 4,0	**MR774-3E80M/4D** **NR774-3E80M/4D** **MR774-2E80M/4C** **NR774-2E80M/4C**	1,77 1,89	230 283 229 282	132	IE3 IE2

*: Geared motor prices are different for IE2 and IE3 motors.

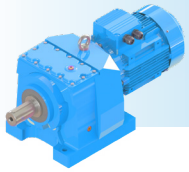

Power P_g [kW] P_g [HP]	IE3 Output Speeds n_2 [r.p.m]	IE3 Output Torque M_2 [Nm]	Ratio i	IE3 Radial Loads (Output) F_{qam} [N]	IE3 Service Factors f_s	Type	Rated Current [A]	Weight ~ [kg]	Dim. Page	* Motor Eff. Class
0,75 1,0	1,5 1,7	4388 3860	**995,91** **874,56**	25927 28823	1,0 1,1	**MR675-3E80M/4D** **NR675-3E80M/4D** **MR675-2E80M/4C** **NR675-2E80M/4C**	1,77 1,89	241 252 240 251	130	IE3 IE2
	1,9 2,1 2,5	3476 3077 2618	**500,39** **442,20** **376,69**	30699 32446 34190	1,2 1,4 1,6	**MR674-3E90S/6B** **NR674-3E90S/6B** **MR674-2E90S/6A** **NR674-2E90S/6A**	1,96 2,00	229 239 227 237	129	IE3 IE2
	2,9 3,3 3,8 4,5 5,2 5,9 6,7	2265 2005 1706 1469 1276 1117 983	**500,39** **442,20** **376,69** **323,82** **281,02** **245,67** **215,97**	35432 36291 37214 37899 38425 38842 40060	1,9 2,1 2,5 2,9 3,4 3,8 4,0	**MR674-3E80M/4D** **NR674-3E80M/4D** **MR674-2E80M/4C** **NR674-2E80M/4C**	1,77 1,89	226 236 225 235	129	IE3 IE2
	2,4	2797	**402,12**	21008	1,1	**MR574-3E90S/6B** **NR574-3E90S/6B** **MR574-2E90S/6A** **NR574-2E90S/6A**	1,96 2,00	145 141 143 139	126	IE3 IE2
	2,5 3,0 3,6 4,2 4,8 5,0 5,6 6,5 7,5 8,4 10	2596 2197 1823 1560 1371 1322 1176 1007 884 783 660	**574,90** **485,89** **402,12** **343,91** **301,59** **291,25** **258,87** **221,40** **194,15** **171,64** **144,37**	22116 24064 25640 26587 27250 27413 27885 28404 28760 29042 30258	1,2 1,4 1,6 1,9 2,2 2,3 2,6 3,0 3,4 3,8 4,0	**MR574-3E80M/4D** **NR574-3E80M/4D** **MR574-2E80M/4C** **NR574-2E80M/4C**	1,77 1,89	138 135 137 134	126	IE3 IE2
	3,5 4,2	1894 1571	**418,16** **346,07**	8853 15203	0,8 1,0	**MR474-3E80M/4D** **NR474-3E80M/4D** **MR474-2E80M/4C** **NR474-2E80M/4C**	1,77 1,89	138 142 137 141	123	IE3 IE2
	4,3 4,9 6,0	1551 1374 1120	**219,00** **194,05** **157,90**	15551 17820 20498	1,0 1,1 1,4	**MR473-3E90S/6B** **NR473-3E90S/6B** **MR473-2E90S/6A** **NR473-2E90S/6A**	1,96 2,00	99 101 97 99	122	IE3 IE2
	6,6 7,5 9,2 10 12 13 16	1014 899 733 648 580 510 427	**219,00** **194,05** **157,90** **139,54** **124,85** **109,64** **91,58**	21451 22407 23603 23025 22325 21522 20436	1,5 1,7 2,1 2,4 2,7 3,0 3,6	**MR473-3E80M/4D** **NR473-3E80M/4D** **MR473-2E80M/4C** **NR473-2E80M/4C**	1,77 1,89	95 98 94 97	122	IE3 IE2
	6,8 8,5	982 791	**138,72** **111,67**	8562 12140	0,8 1,0	**MR373-3E90S/6B** **NR373-3E90S/6B** **MR373-2E90S/6A** **NR373-2E90S/6A**	1,96 2,00	59 61 57 59	119	IE3 IE2

*: Geared motor prices are different for IE2 and IE3 motors.

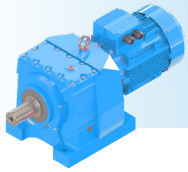

MR/MV/MN/NR/NV/NN - PERFORMANCE TABLES

Power P_g [kW] P_g [HP]	IE3 Output Speeds n_2 [r.p.m]	IE3 Output Torque M_2 [Nm]	Ratio i	IE3 Radial Loads (Output) F_{qam} [N]	IE3 Service Factors f_s	Type	Rated Current [A]	Weight ~ [kg]	Dim. Page	* Motor Eff. Class
0,75	9,2	729	**157,76**	12354	1,1	**MR373-3E80M/4D**	1,77	54	119	IE3
1,0	10	642	**138,72**	12049	1,3	**NR373-3E80M/4D**		56		
	13	517	**111,67**	11507	1,6	**MR373-2E80M/4C**	1,89	53		IE2
	15	454	**97,92**	11168	1,8	**NR373-2E80M/4C**		55		
	17	402	**86,57**	10846	2,0					
	20	339	**72,81**	10391	2,4					
	23	288	**61,91**	9965	2,8					
	27	247	**53,04**	9564	3,3					
	30	224	**48,00**	9307	3,7					
	9,7	692	**97,62**	7187	0,9	**MR283-3E90S/6B**	1,96	46	116	IE3
						NR283-3E90S/6B		48		
						MR283-2E90S/6A	2,00	44		IE2
						NR283-2E90S/6A		46		
	11	638	**137,91**	8472	0,9	**MR283-3E80M/4D**	1,77	44	116	IE3
	13	529	**114,14**	9240	1,1	**NR283-3E80M/4D**		49		
	15	453	**97,62**	8974	1,3	**MR283-2E80M/4C**	1,89	43		IE2
	17	397	**85,60**	8738	1,5	**NR283-2E80M/4C**		48		
	19	352	**75,68**	8509	1,7					
	23	296	**63,65**	8180	2,0					
	27	252	**54,12**	7866	2,4					
	31	216	**46,37**	7567	2,6					
	35	196	**41,96**	7374	2,8					
	12	561	**121,03**	5581	0,8	**MR273-3E80M/4D**	1,77	35	114	IE3
	13	526	**113,52**	5868	0,9	**NR273-3E80M/4D**		37		
	15	448	**96,52**	6462	1,0	**MR273-2E80M/4C**	1,89	34		IE2
	17	389	**83,83**	6842	1,2	**NR273-2E80M/4C**		36		
	20	341	**73,35**	7104	1,3					
	24	282	**60,66**	7338	1,6					
	29	236	**50,59**	7441	1,9					
	34	198	**42,41**	7036	2,3					
	40	171	**36,55**	6660	2,6					
	48	142	**30,48**	6232	3,2					
	21	316	**68,03**	6569	0,9	**MR203-3E80M/4D**	1,77	33	113	IE3
	24	276	**59,43**	6409	1,0	**NR203-3E80M/4D**		35		
	26	259	**55,74**	6329	1,1	**MR203-2E80M/4C**	1,89	32		IE2
	31	221	**47,39**	6121	1,3	**NR203-2E80M/4C**		34		
	33	205	**43,94**	6021	1,4					
	35	192	**41,16**	5933	1,5					
	40	168	**36,02**	5752	1,7					
	51	132	**28,35**	6540	2,1					
	59	115	**24,77**	6214	2,4					
	62	108	**23,23**	6067	2,5					
	63	109	**23,01**	5957	2,6	**MR202-3E80M/4D**	1,77	33	113	IE3
	72	95	**20,10**	5671	2,7	**NR202-3E80M/4D**		34		
	77	89	**18,85**	5541	2,9	**MR202-2E80M/4C**	1,89	32		IE2
	90	76	**16,03**	5227	3,2	**NR202-2E80M/4C**		33		
	29	231	**49,81**	3498	0,9	**MR173-3E80M/4D**	1,77	23	112	IE3
	32	213	**45,90**	3473	0,9	**NR173-3E80M/4D**		24		
	34	199	**42,87**	3449	1,0	**MR173-2E80M/4C**	1,89	22		IE2
	40	169	**36,24**	3377	1,2	**NR173-2E80M/4C**		23		
	48	141	**30,26**	3285	1,4					
	56	122	**26,10**	3200	1,6					

*: Geared motor prices are different for IE2 and IE3 motors.

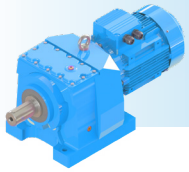

Power P_g [kW] P_g [HP]	IE3 Output Speeds n_2 [r.p.m]	IE3 Output Torque M_2 [Nm]	Ratio i	IE3 Radial Loads (Output) F_{qam} [N]	IE3 Service Factors f_s	Type	Rated Current [A]	Weight ~ [kg]	Dim. Page	* Motor Eff. Class
0,75 1,0	69	99	**20,92**	3487	2,0	**MR172-3E80M/4D**	1,77	23	112	IE3
	79	87	**18,28**	3476	2,3	**NR172-3E80M/4D**		25		
	85	81	**17,14**	3464	2,5	**MR172-2E80M/4C**	1,89	22		IE2
	99	69	**14,57**	3394	2,8	**NR172-2E80M/4C**		24		
	115	60	**12,66**	3224	3,2					
	131	53	**11,08**	3071	3,4					
	41	164	**35,21**	2088	0,9	**MR103-3E80M/4D**	1,77	22	111	IE3
	45	150	**32,25**	2084	0,9	**NR103-3E80M/4D**		25		
	49	137	**29,40**	2074	1,0	**MR103-2E80M/4C**	1,89	21		IE2
	58	116	**24,86**	1965	1,1	**NR103-2E80M/4C**		24		
	66	102	**21,96**	1946	1,2					
	71	96	**20,51**	1933	1,3					
	84	81	**17,33**	1894	1,4					
	91	75	**15,95**	1923	1,5	**MR102-3E80M/4D**	1,77	22	111	IE3
	103	67	**14,08**	1880	1,7	**NR102-3E80M/4D**		23		
	110	62	**13,15**	1855	1,7	**MR102-2E80M/4C**	1,89	21		IE2
	130	53	**11,12**	1792	1,9	**NR102-2E80M/4C**		22		
	142	48	**10,18**	1758	2,1					
	156	44	**9,29**	1722	2,2					
	181	38	**8,01**	1663	2,4					
	209	33	**6,93**	1582	2,7					
	224	31	**6,48**	1556	2,8					
	265	26	**5,47**	1492	3,1					
	289	24	**5,01**	1459	3,4					
	317	22	**4,57**	1424	3,5					
	60	112	**24,13**	276	0,7	**MR003-3E80M/4D**	1,77	19	110	IE3
	68	99	**21,26**	434	0,8	**NR003-3E80M/4D**		20		
	70	96	**20,66**	560	0,9	**MR003-2E80M/4C**	1,89	18		IE2
	76	89	**19,17**	676	0,9	**NR003-2E80M/4C**		19		
	80	85	**18,20**	683	1,0					
	86	79	**16,89**	783	1,0					
	99	68	**14,67**	857	1,2					
	107	63	**13,61**	934	1,3					
	130	53	**11,14**	1465	1,2	**MR002-3E80M/4D**	1,77	19	110	IE3
	147	47	**9,87**	1480	1,7	**NR002-3E80M/4D**		20		
	167	41	**8,70**	1472	1,8	**MR002-2E80M/4C**	1,89	18		IE2
	172	40	**8,45**	1508	1,8	**NR002-2E80M/4C**		19		
	185	37	**7,84**	1515	1,9					
	195	35	**7,45**	1491	2,0					
	210	33	**6,91**	1495	2,1					
	242	28	**6,00**	1458	2,3					
	260	26	**5,57**	1457	2,4					
	318	22	**4,56**	1360	2,7					
	372	19	**3,90**	1350	3,0					
	401	17	**3,62**	1343	3,1					
	417	16	**6,91**	1421	3,3	**MR002-3E80M/2B**	1,59	19	110	IE3
	480	14	**6,00**	1371	3,6	**NR002-3E80M/2B**		20		
	517	13	**5,57**	1355	3,9	**MR002-2E80M/2A**	1,67	18		IE2
	632	11	**4,56**	1266	4,0	**NR002-2E80M/2A**		19		
	738	9	**3,90**	1223	4,0					
	796	9	**3,62**	1190	4,0					

*: Geared motor prices are different for IE2 and IE3 motors.

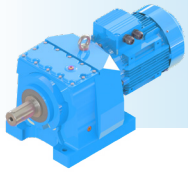

MR/MV/MN/NR/NV/NN - PERFORMANCE TABLES

Power P_g [kW] P_g [HP]	IE3 Output Speeds n_2 [r.p.m]	IE3 Output Torque M_2 [Nm]	Ratio i	IE3 Radial Loads (Output) F_{qam} [N]	IE3 Service Factors f_s	Type	Rated Current [A]	Weight ~ [kg]	Dim. Page	* Motor Eff. Class
1,1	0,40	22784	**3594,81**	54822	0,8	**MR976-3E90S/4C**	2,46	1097	139	IE3
1,5	0,51	18037	**2836,64**	94915	1,0	**NR976-3E90S/4C**		1147		
						MR976-2E90S/4B	2,60	1095		IE2
						NR976-2E90S/4B		1145		
	0,71	13153	**2027,97**	119815	1,4	**MR975-3E90S/4C**	2,46	1095	139	IE3
	0,80	11817	**1820,78**	125260	1,5	**NR975-3E90S/4C**		1145		
	0,93	10066	**1552,10**	131719	1,8	**MR975-2E90S/4B**	2,60	1093		IE2
	1,1	8881	**1368,27**	135508	2,0	**NR975-2E90S/4B**		1143		
	1,2	7885	**1213,85**	138679	2,3					
	1,3	7035	**1082,31**	141234	2,6					
	1,6	5960	**914,74**	144282	3,0					
	1,7	5488	**842,80**	145559	3,3					
	0,75	12424	**1924,32**	75738	1,0	**MR875-3E90S/4C**	2,46	600	136	IE3
	0,85	10997	**1700,56**	83016	1,2	**NR875-3E90S/4C**		605		
	0,95	9841	**1521,55**	88196	1,3	**MR875-2E90S/4B**	2,60	598		IE2
	1,1	8657	**1336,15**	92964	1,5	**NR875-2E90S/4B**		603		
	1,2	7849	**1210,51**	95787	1,7					
	1,4	6791	**1049,18**	99548	1,9					
	1,6	5934	**915,85**	102241	2,2					
	1,8	5240	**807,91**	104289	2,5					
	2,0	4665	**718,74**	105897	2,8					
	2,3	4182	**643,84**	107191	3,1					
	2,7	3502	**537,75**	108929	3,7					
	1,2	8093	**1252,60**	48526	1,0	**MR775-3E90S/4C**	2,46	338	133	IE3
	1,3	7244	**1120,74**	51722	1,1	**NR775-3E90S/4C**		408		
	1,5	6373	**984,18**	54641	1,3	**MR775-2E90S/4B**	2,60	336		IE2
						NR775-2E90S/4B		406		
	1,6	6095	**594,92**	55503	1,3	**MR774-3E90L/6C**	2,75	310	132	IE3
	1,8	5455	**532,29**	57384	1,5	**NR774-3E90L/6C**		376		
	2,0	4799	**467,43**	59184	1,7	**MR774-2E90L/6B**	2,90	308		IE2
	2,2	4297	**418,17**	60431	1,9	**NR774-2E90L/6B**		374		
	2,4	3951	**594,92**	61197	2,0	**MR774-3E90S/4C**	2,46	305	132	IE3
	2,7	3536	**532,29**	62157	2,3	**NR774-3E90S/4C**		371		
	3,1	3111	**467,43**	63092	2,6	**MR774-2E90S/4B**	2,60	303		IE2
	3,5	2786	**418,17**	63773	2,9	**NR774-2E90S/4B**		369		
	4,0	2406	**361,62**	64534	3,3					
	4,6	2087	**313,11**	65147	3,8					
	5,3	1828	**273,85**	66837	4,0					
	2,1	4537	**442,20**	24922	0,9	**MR674-3E90L/6C**	2,75	234	129	IE3
	2,5	3860	**376,69**	28823	1,1	**NR674-3E90L/6C**		244		
						MR674-2E90L/6B	2,90	232		IE2
						NR674-2E90L/6B		242		
	2,9	3322	**500,39**	31393	1,3	**MR674-3E90S/4C**	2,46	230	129	IE3
	3,3	2941	**442,20**	33000	1,5	**NR674-3E90S/4C**		240		
	3,8	2502	**376,69**	34662	1,7	**MR674-2E90S/4B**	2,60	228		IE2
	4,5	2154	**323,82**	35806	2,0	**NR674-2E90S/4B**		238		
	5,2	1872	**281,02**	36711	2,3					
	5,9	1638	**245,67**	37414	2,6					
	6,7	1442	**215,97**	37974	3,0					

*: Geared motor prices are different for IE2 and IE3 motors.

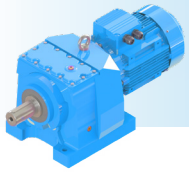

Power P_g [kW] P_g [HP]	IE3 Output Speeds n_2 [r.p.m]	IE3 Output Torque M_2 [Nm]	Ratio i	IE3 Radial Loads (Output) F_{qam} [N]	IE3 Service Factors f_s	Type	Rated Current [A]	Weight ~ [kg]	Dim. Page	* Motor Eff. Class
1,1 1,5	3,6	2674	**402,12**	21701	1,1	**MR574-3E90S/4C**	2,46	151	126	IE3
	4,2	2288	**343,91**	23647	1,3	**NR574-3E90S/4C**		147		
	4,8	2010	**301,59**	24880	1,5	**MR574-2E90S/4B**	2,60	149		IE2
	5,0	1939	**291,25**	25139	1,5	**NR574-2E90S/4B**		145		
	5,6	1725	**258,87**	26019	1,7					
	6,5	1477	**221,40**	26885	2,0					
	7,5	1297	**194,15**	27495	2,3					
	8,4	1149	**171,64**	27971	2,6					
	10	969	**144,37**	28517	3,1					
	6,0	1654	**157,90**	13930	0,9	**MR473-3E90L/6C**	2,75	98	122	IE3
						NR473-3E90L/6C		100		
						MR473-2E90L/6B	2,90	96		IE2
						NR473-2E90L/6B		98		
	6,6	1489	**219,00**	16399	1,0	**MR473-3E90S/4C**	2,46	97	122	IE3
	7,5	1319	**194,05**	18456	1,2	**NR473-3E90S/4C**		99		
	9,2	1075	**157,90**	20912	1,4	**MR473-2E90S/4B**	2,60	95		IE2
	10	951	**139,54**	21983	1,6	**NR473-2E90S/4B**		97		
	12	851	**124,85**	21485	1,8					
	13	748	**109,64**	20784	2,1					
	16	626	**91,58**	19820	2,5					
	17	592	**86,52**	19519	2,6					
	10	942	**138,72**	9428	0,9	**MR373-3E90S/4C**	2,46	58	119	IE3
	13	759	**111,67**	10612	1,1	**NR373-3E90S/4C**		61		
	15	666	**97,92**	10383	1,2	**MR373-2E90S/4B**	2,60	56		IE2
	17	590	**86,57**	10152	1,4	**NR373-2E90S/4B**		59		
	20	497	**72,81**	9807	1,7					
	23	423	**61,91**	9469	1,9					
	27	363	**53,04**	9139	2,3					
	30	329	**48,00**	8923	2,5					
	40	249	**23,33**	9617	3,3	**MR372-3E90L/6C**	2,75	60	119	IE3
	46	221	**20,62**	9198	3,7	**NR372-3E90L/6C**		64		
						MR372-2E90L/6B	2,90	58		IE2
						NR372-2E90L/6B		62		
	15	664	**97,62**	7865	0,9	**MR283-3E90S/4C**	2,46	50	116	IE3
	17	583	**85,60**	7981	1,0	**NR283-3E90S/4C**		54		
	19	516	**75,68**	7840	1,2	**MR283-2E90S/4B**	2,60	48		IE2
	23	435	**63,65**	7617	1,4	**NR283-2E90S/4B**		52		
	27	370	**54,12**	7388	1,6					
	31	317	**46,37**	7157	1,8					
	35	288	**41,96**	7003	1,9					
	37	269	**25,23**	8462	2,2	**MR282-3E90L/6C**	2,75	48	116	IE3
	43	231	**21,66**	7998	2,5	**NR282-3E90L/6C**		52		
						MR282-2E90L/6B	2,90	46		IE2
						NR282-2E90L/6B		50		
	48	210	**30,37**	7724	2,7	**MR282-3E90S/4C**	2,46	50	116	IE3
	57	175	**25,23**	7220	3,0	**NR282-3E90S/4C**		53		
	67	150	**21,66**	6832	3,3	**MR282-2E90S/4B**	2,60	48		IE2
						NR282-2E90S/4B		51		

*: Geared motor prices are different for IE2 and IE3 motors.

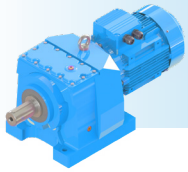

MR/MV/MN/NR/NV/NN - PERFORMANCE TABLES

Power P_g [kW] P_g [HP]	IE3 Output Speeds n_2 [r.p.m]	IE3 Output Torque M_2 [Nm]	Ratio i	IE3 Radial Loads (Output) F_{qam} [N]	IE3 Service Factors f_s	Type	Rated Current [A]	Weight ~ [kg]	Dim. Page	* Motor Eff. Class
1,1	17	571	**83,83**	3638	0,8	**MR273-3E90S/4C**	2,46	40	114	IE3
1,5	20	500	**73,35**	4300	0,9	**NR273-3E90S/4C**		41		
	24	414	**60,66**	5020	1,1	**MR273-2E90S/4B**	2,60	38		IE2
	29	346	**50,59**	5507	1,3	**NR273-2E90S/4B**		39		
	34	290	**42,41**	5828	1,5					
	40	250	**36,55**	6004	1,8					
	48	209	**30,48**	6122	2,2					
	56	180	**25,89**	5979	2,5	**MR272-3E90S/4C**	2,46	41	114	IE3
	68	149	**21,43**	5575	3,0	**NR272-3E90S/4C**		43		
	79	127	**18,33**	5265	3,5	**MR272-2E90S/4B**	2,60	39		IE2
						NR272-2E90S/4B		41		
	31	324	**47,39**	5612	0,9	**MR203-3E90S/4C**	2,46	39	113	IE3
	33	301	**43,94**	5549	0,9	**NR203-3E90S/4C**		42		
	35	281	**41,16**	5492	1,0	**MR203-2E90S/4B**	2,60	37		IE2
	40	247	**36,02**	5366	1,1	**NR203-2E90S/4B**		40		
	51	193	**28,35**	5583	1,4					
	59	169	**24,77**	5753	1,6					
	62	159	**23,23**	5811	1,7					
	63	159	**23,01**	6089	1,8	**MR202-3E90S/4C**	2,46	41	113	IE3
	72	139	**20,10**	5787	1,9	**NR202-3E90S/4C**		43		
	77	131	**18,85**	5650	2,0	**MR202-2E90S/4B**	2,60	39		IE2
	90	111	**16,03**	5319	2,2	**NR202-2E90S/4B**		41		
	98	103	**14,86**	5173	2,3					
	104	97	**13,92**	5050	2,4					
	119	85	**12,18**	4810	2,7					
	134	75	**10,81**	4605	2,9					
	144	70	**10,07**	4490	3,0					
	173	59	**8,40**	4207	3,4					
	40	247	**36,24**	2920	0,8	**MR173-3E90S/4C**	2,46	30	112	IE3
	48	207	**30,26**	2903	1,0	**NR173-3E90S/4C**		32		
	56	179	**26,10**	2870	1,1	**MR173-2E90S/4B**	2,60	28		IE2
						NR173-2E90S/4B		30		
	69	145	**20,92**	2679	1,4	**MR172-3E90S/4C**	2,46	29	112	IE3
	79	127	**18,28**	2770	1,6	**NR172-3E90S/4C**		30		
	85	119	**17,14**	2803	1,7	**MR172-2E90S/4B**	2,60	27		IE2
	99	101	**14,57**	2857	1,9	**NR172-2E90S/4B**		28		
	115	88	**12,66**	2877	2,2					
	131	77	**11,08**	2877	2,3					
	152	66	**9,53**	2710	2,6					
	162	62	**8,94**	2706	2,6					
	191	53	**7,60**	2683	3,0					
	205	49	**7,08**	2667	3,1					
	220	46	**6,60**	2618	3,1					
	251	40	**5,78**	2492	3,3					
	58	170	**24,86**	1593	0,8	**MR103-3E90S/4C**	2,46	29	111	IE3
	66	150	**21,96**	1618	0,8	**NR103-3E90S/4C**		31		
	71	140	**20,51**	1626	0,9	**MR103-2E90S/4B**	2,60	27		IE2
	84	119	**17,33**	1634	0,9	**NR103-2E90S/4B**		29		
	91	111	**15,95**	1708	1,0	**MR102-3E90S/4C**	2,46	30	111	IE3
	103	98	**14,08**	1691	1,1	**NR102-3E90S/4C**		31		
	110	91	**13,15**	1678	1,1	**MR102-2E90S/4B**	2,60	28		IE2
	130	77	**11,12**	1643	1,3	**NR102-2E90S/4B**		29		

*: Geared motor prices are different for IE2 and IE3 motors.

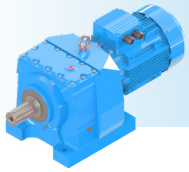

Power P_g [kW] P_g [HP]	IE3 Output Speeds n_2 [r.p.m]	IE3 Output Torque M_2 [Nm]	Ratio i	IE3 Radial Loads (Output) F_{qam} [N]	IE3 Service Factors f_s	Type	Rated Current [A]	Weight ~ [kg]	Dim. Page	* Motor Eff. Class
1,1 1,5	142	71	**10,18**	1621	1,4	**MR102-3E90S/4C**	2,46	30	111	IE3
	156	65	**9,29**	1597	1,5	**NR102-3E90S/4C**		31		
	181	56	**8,01**	1555	1,6	**MR102-2E90S/4B**	2,60	28		IE2
	209	48	**6,93**	1479	1,9	**NR102-2E90S/4B**		29		
	224	45	**6,48**	1460	1,9					
	265	38	**5,47**	1410	2,1					
	289	35	**5,01**	1384	2,3					
	317	32	**4,57**	1356	2,4					
	368	28	**3,94**	1310	2,5					
	415	24	**6,93**	1271	2,9	**MR102-3E80M/2C**	2,26	25	111	IE3
	445	23	**6,48**	1250	3,1	**NR102-3E80M/2C**		26		
	526	19	**5,47**	1197	3,4	**MR102-2E80M/2B**	2,36	24		IE2
						NR102-2E80M/2B		25		
	99	100	**14,67**	-	0,8	**MR003-3E90S/4C**	2,46	24	110	IE3
	107	93	**13,61**	33	0,9	**NR003-3E90S/4C**		25		
						MR003-2E90S/4B	2,60	22		IE2
						NR003-2E90S/4B		23		
	130	77	**11,14**	896	0,8	**MR002-3E90S/4C**	2,46	24	110	IE3
	147	69	**9,87**	969	1,1	**NR002-3E90S/4C**		25		
	167	60	**8,70**	1007	1,2	**MR002-2E90S/4B**	2,60	22		IE2
	172	59	**8,45**	1070	1,3	**NR002-2E90S/4B**		23		
	185	55	**7,84**	1109	1,3					
	195	52	**7,45**	1093	1,4					
	210	48	**6,91**	1125	1,4					
	242	42	**6,00**	1121	1,6					
	260	39	**5,57**	1144	1,7					
	318	32	**4,56**	1066	1,8					
	372	27	**3,90**	1098	2,0					
	401	25	**3,62**	1109	2,1					
	417	24	**6,91**	1234	2,2	**MR002-3E80M/2C**	2,26	18	110	IE3
	480	21	**6,00**	1202	2,5	**NR002-3E80M/2C**		20		
	517	20	**5,57**	1197	2,6	**MR002-2E80M/2B**	2,36	17		IE2
	632	16	**4,56**	1118	2,9	**NR002-2E80M/2B**		19		
	738	14	**3,90**	1105	3,2					
	796	13	**3,62**	1097	3,3					
1,5 2,0	0,71	17935	**2027,97**	95566	1,0	**MR975-3E90L/4D**	3,30	1031	139	IE3
	0,80	16114	**1820,78**	105780	1,1	**NR975-3E90L/4D**		1081		
	0,93	13727	**1552,10**	117320	1,3	**MR975-2E90L/4C**	3,40	1030		IE2
	1,1	12111	**1368,27**	124101	1,5	**NR975-2E90L/4C**		1080		
	1,2	10752	**1213,85**	129104	1,7					
	1,3	9594	**1082,31**	133120	1,9					
	1,6	8128	**914,74**	137923	2,2					
	1,7	7484	**842,80**	139900	2,4					
	1,9	6675	**750,24**	142278	2,7					
	2,2	5906	**662,54**	144432	3,0					
	2,5	5259	**588,87**	146168	3,4					
	0,85	14996	**1700,56**	59105	0,9	**MR875-3E90L/4D**	3,30	595	136	IE3
	0,95	13420	**1521,55**	69941	1,0	**NR875-3E90L/4D**		600		
	1,1	11805	**1336,15**	79031	1,1	**MR875-2E90L/4C**	3,40	594		IE2
	1,2	10703	**1210,51**	84391	1,2	**NR875-2E90L/4C**		599		
	1,4	9260	**1049,18**	90598	1,4					
	1,6	8092	**915,85**	95067	1,6					
	1,8	7145	**807,91**	98483	1,8					

*: Geared motor prices are different for IE2 and IE3 motors.

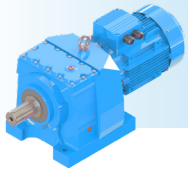

MR/MV/MN/NR/NV/NN - PERFORMANCE TABLES

Power P_g [kW] P_g [HP]	IE3 Output Speeds n_2 [r.p.m]	IE3 Output Torque M_2 [Nm]	Ratio i	IE3 Radial Loads (Output) F_{qam} [N]	IE3 Service Factors f_s	Type	Rated Current [A]	Weight ~ [kg]	Dim. Page	* Motor Eff. Class
1,5 2,0	2,1	6145	**446,42**	101594	2,1	**MR874-3E100L/6B**	3,50	587	135	IE3
	2,4	5389	**390,74**	103902	2,4	**NR874-3E100L/6B**		592		
	2,8	4775	**345,67**	105596	2,7	**MR874-2E100L/6A**	3,72	584		IE2
	3,3	4044	**292,15**	107551	3,2	**NR874-2E100L/6A**		589		
	4,0	3320	**239,61**	109333	3,9					
	1,6	8181	**594,92**	48173	1,0	**MR774-3E100L/6B**	3,50	323	132	IE3
	1,8	7322	**532,29**	51444	1,1	**NR774-3E100L/6B**		394		
	2,0	6441	**467,43**	54425	1,2	**MR774-2E100L/6A**	3,72	320		IE2
	2,3	5768	**418,17**	56392	1,4	**NR774-2E100L/6A**		391		
	2,4	5388	**594,92**	57573	1,5	**MR774-3E90L/4D**	3,30	318	132	IE3
	2,7	4822	**532,29**	59016	1,7	**NR774-3E90L/4D**		385		
	3,1	4242	**467,43**	60495	1,9	**MR774-2E90L/4C**	3,40	317		IE2
	3,5	3799	**418,17**	61555	2,1	**NR774-2E90L/4C**		384		
	4,0	3281	**361,62**	62723	2,4					
	4,6	2845	**313,11**	63650	2,8					
	5,3	2492	**273,85**	64365	3,2					
	6,0	2200	**241,42**	64933	3,6					
	6,8	1954	**214,17**	65755	4,0					
	2,9	4531	**500,39**	25002	0,9	**MR674-3E90L/4D**	3,30	237	129	IE3
	3,3	4010	**442,20**	28028	1,1	**NR674-3E90L/4D**		248		
	3,8	3412	**376,69**	30992	1,3	**MR674-2E90L/4C**	3,40	236		IE2
	4,5	2937	**323,82**	33014	1,5	**NR674-2E90L/4C**		247		
	5,2	2553	**281,02**	34480	1,7					
	5,9	2234	**245,67**	35538	1,9					
	6,7	1966	**215,97**	36416	2,2					
	4,2	3120	**343,91**	19040	1,0	**MR574-3E90L/4D**	3,30	153	126	IE3
	4,8	2741	**301,59**	21328	1,1	**NR574-3E90L/4D**		137		
	5,0	2644	**291,25**	19040	1,1	**MR574-2E90L/4C**	3,40	152		IE2
	5,6	2352	**258,87**	21328	1,3	**NR574-2E90L/4C**		136		
	5,7	2351	**167,32**	23351	1,3	**MR573-3E100L/6B**	3,50	140	125	IE3
	6,2	2158	**153,61**	24242	1,4	**NR573-3E100L/6B**		136		
	7,1	1891	**134,45**	25329	1,6	**MR573-2E100L/6A**	3,72	137		IE2
	8,0	1675	**118,95**	26174	1,8	**NR573-2E100L/6A**		133		
	9,5	1418	**100,53**	27098	2,1					
	12	1163	**82,45**	27932	2,6					
	13	1028	**72,81**	28345	2,9					
	15	915	**64,72**	28677	3,3					
	17	775	**54,74**	29069	3,9					
	20	691	**48,74**	29444	4,0					
	7,5	1800	**194,05**	11156	0,9	**MR473-3E90L/4D**	3,30	100	122	IE3
	9,2	1468	**157,90**	16686	1,1	**NR473-3E90L/4D**		102		
	10	1298	**139,54**	18683	1,2	**MR473-2E90L/4C**	3,40	99		IE2
	12	1162	**124,85**	20098	1,3	**NR473-2E90L/4C**		101		
	13	1021	**109,64**	19941	1,5					
	16	855	**91,58**	19117	1,8					
	17	808	**86,52**	18854	1,9					
	18	733	**157,90**	18431	2,1	**MR473-3E90S/2B**	2,97	98	122	IE3
	21	648	**139,54**	17860	2,4	**NR473-3E90S/2B**		100		
	23	580	**124,85**	17348	2,7	**MR473-2E90S/2A**	3,19	97		IE2
	26	510	**109,64**	16756	3,0	**NR473-2E90S/2A**		99		

*: Geared motor prices are different for IE2 and IE3 motors.

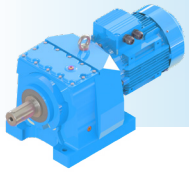

Power P_g [kW] P_g [HP]	IE3 Output Speeds n_2 [r.p.m]	IE3 Output Torque M_2 [Nm]	Ratio i	IE3 Radial Loads (Output) F_{qam} [N]	IE3 Service Factors f_s	Type	Rated Current [A]	Weight ~ [kg]	Dim. Page	* Motor Eff. Class
1,5 2,0	15	910	**97,92**	9486	0,9	**MR373-3E90L/4D**	3,30	61	119	IE3
	17	805	**86,57**	9359	1,0	**NR373-3E90L/4D**		64		
	20	678	**72,81**	9140	1,2	**MR373-2E90L/4C**	3,40	60		IE2
	23	577	**61,91**	8902	1,4	**NR373-2E90L/4C**		63		
	27	495	**53,04**	8653	1,7					
	30	448	**48,00**	8483	1,8					
	41	335	**23,33**	9704	2,4	**MR372-3E100L/6B**	3,50	62	119	IE3
	46	296	**20,62**	9272	2,8	**NR372-3E100L/6B**		64		
	52	265	**18,45**	8902	3,1	**MR372-2E100L/6A**	3,72	59		IE2
	59	233	**16,20**	8491	3,5	**NR372-2E100L/6A**		61		
	62	221	**23,33**	8331	3,6	**MR372-3E90L/4D**	3,30	60	119	IE3
	70	196	**20,62**	7967	3,9	**NR372-3E90L/4D**		62		
	79	175	**18,45**	7656	4,0	**MR372-2E90L/4C**	3,40	59		IE2
						NR372-2E90L/4C		61		
	19	704	**75,68**	6867	0,9	**MR283-3E90L/4D**	3,30	52	116	IE3
	23	593	**63,65**	6973	1,0	**NR283-3E90L/4D**		54		
	27	505	**54,12**	6841	1,2	**MR283-2E90L/4C**	3,40	51		IE2
	31	433	**46,37**	6688	1,3	**NR283-2E90L/4C**		53		
	35	392	**41,96**	6579	1,4					
	38	362	**25,23**	8572	1,7	**MR282-3E100L/6B**	3,50	55	116	IE3
	44	310	**21,66**	8096	1,9	**NR282-3E100L/6B**		57		
						MR282-2E100L/6A	3,72	52		IE2
						NR282-2E100L/6A		54		
	48	287	**30,37**	7858	1,9	**MR282-3E90L/4D**	3,30	51	116	IE3
	57	239	**25,23**	7332	2,2	**NR282-3E90L/4D**		53		
	67	205	**21,66**	6930	2,4	**MR282-2E90L/4C**	3,40	50		IE2
	76	181	**19,06**	6612	2,7	**NR282-2E90L/4C**		52		
	86	161	**16,91**	6330	2,9					
	101	136	**14,31**	5959	3,2					
	24	565	**60,66**	2371	0,8	**MR273-3E90L/4D**	3,30	43	114	IE3
	29	472	**50,59**	3298	1,0	**NR273-3E90L/4D**		45		
	34	396	**42,41**	3976	1,1	**MR273-2E90L/4C**	3,40	42		IE2
	40	342	**36,55**	4408	1,3	**NR273-2E90L/4C**		44		
	48	285	**30,48**	4791	1,6					
	56	245	**25,89**	5025	1,8	**MR272-3E90L/4D**	3,30	42	114	IE3
	68	203	**21,43**	5190	2,2	**NR272-3E90L/4D**		44		
	79	174	**18,33**	5256	2,6	**MR272-2E90L/4C**	3,40	41		IE2
	90	153	**16,07**	5098	2,8	**NR272-2E90L/4C**		43		
	102	135	**14,21**	4871	3,0					
	121	114	**11,95**	4571	3,4					
	40	337	**36,02**	4924	0,8	**MR203-3E90L/4D**	3,30	43	113	IE3
	51	264	**28,35**	3749	1,1	**NR203-3E90L/4D**		44		
	59	231	**24,77**	4150	1,2	**MR203-2E90L/4C**	3,40	42		IE2
	62	217	**23,23**	4309	1,2	**NR203-2E90L/4C**		43		
	63	218	**23,01**	5238	1,3	**MR202-3E90L/4D**	3,30	41	113	IE3
	72	190	**20,10**	5393	1,4	**NR202-3E90L/4D**		43		
	77	179	**18,85**	5446	1,5	**MR202-2E90L/4C**	3,40	40		IE2
	90	152	**16,03**	5423	1,6	**NR202-2E90L/4C**		42		

*: Geared motor prices are different for IE2 and IE3 motors.

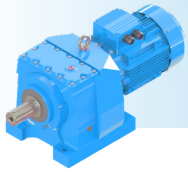

MR/MV/MN/NR/NV/NN - PERFORMANCE TABLES

Power P_g [kW] P_g [HP]	IE3 Output Speeds n_2 [r.p.m]	IE3 Output Torque M_2 [Nm]	Ratio i	IE3 Radial Loads (Output) F_{qam} [N]	IE3 Service Factors f_s	Type	Rated Current [A]	Weight ~ [kg]	Dim. Page	* Motor Eff. Class
1,5	98	141	**14,86**	5270	1,7	**MR202-3E90L/4D**	3,30	41	113	IE3
2,0	104	132	**13,92**	5141	1,8	**NR202-3E90L/4D**		43		
	119	116	**12,18**	4890	1,9	**MR202-2E90L/4C**	3,40	40		IE2
	134	103	**10,81**	4676	2,1	**NR202-2E90L/4C**		42		
	144	96	**10,07**	4556	2,2					
	173	80	**8,40**	4262	2,5					
	206	67	**7,04**	3997	2,8					
	250	55	**5,80**	3772	3,2					
	69	198	**20,92**	1757	1,0	**MR172-3E90L/4D**	3,30	31	112	IE3
	79	173	**18,28**	1964	1,2	**NR172-3E90L/4D**		33		
	85	163	**17,14**	2047	1,2	**MR172-2E90L/4C**	3,40	30		IE2
	99	138	**14,57**	2214	1,4	**NR172-2E90L/4C**		32		
	115	120	**12,66**	2319	1,6					
	131	105	**11,08**	2388	1,7					
	152	91	**9,53**	2236	1,9					
	162	85	**8,94**	2262	1,9					
	191	72	**7,60**	2304	2,2					
	205	67	**7,08**	2315	2,3					
	220	63	**6,60**	2320	2,3					
	251	55	**5,78**	2319	2,4					
	303	46	**4,78**	2297	2,8					
	355	39	**4,09**	2195	3,1					
	429	32	**3,38**	2095	3,4					
	439	31	**6,60**	2062	4,0	**MR172-3E90S/2B**	2,97	30	112	IE3
	502	27	**5,78**	1964	4,0	**NR172-3E90S/2B**		32		
	607	23	**4,78**	1834	4,0	**MR172-2E90S/2A**	3,19	29		IE2
	710	19	**4,09**	1744	4,0	**NR172-2E90S/2A**		31		
	103	134	**14,08**	1474	0,8	**MR102-3E90L/4D**	3,30	30	111	IE3
	110	125	**13,15**	1476	0,8	**NR102-3E90L/4D**		31		
	130	106	**11,12**	1472	0,9	**MR102-2E90L/4C**	3,40	29		IE2
	142	97	**10,18**	1465	1,0	**NR102-2E90L/4C**		30		
	156	88	**9,29**	1454	1,1					
	181	76	**8,01**	1432	1,2					
	209	66	**6,93**	1360	1,4					
	224	62	**6,48**	1349	1,4					
	265	52	**5,47**	1317	1,5					
	289	48	**5,01**	1298	1,7					
	317	44	**4,57**	1278	1,7					
	368	38	**3,94**	1242	1,9					
	418	33	**6,93**	1210	2,1	**MR102-3E90S/2B**	2,97	28	111	IE3
	448	31	**6,48**	1192	2,3	**NR102-3E90S/2B**		30		
	530	26	**5,47**	1148	2,5	**MR102-2E90S/2A**	3,19	27		IE2
	578	24	**5,01**	1125	2,5	**NR102-2E90S/2A**		29		
	634	22	**4,57**	1100	2,8					
	736	19	**3,94**	1060	2,9					
	147	94	**9,87**	384	0,8	**MR002-3E90L/4D**	3,30	27	110	IE3
	167	82	**8,70**	475	0,9	**NR002-3E90L/4D**		28		
	172	80	**8,45**	569	0,9	**MR002-2E90L/4C**	3,40	26		IE2
	185	74	**7,84**	644	1,0	**NR002-2E90L/4C**		27		
	195	71	**7,45**	637	1,0					
	210	66	**6,91**	703	1,1					
	242	57	**6,00**	735	1,2					
	260	53	**5,57**	786	1,2					
	318	43	**4,56**	730	1,3					
	372	37	**3,90**	811	1,5					
	401	34	**3,62**	842	1,5					

*: Geared motor prices are different for IE2 and IE3 motors.

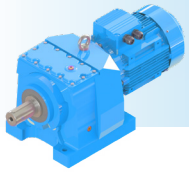

Power P_g [kW] P_g [HP]	IE3 Output Speeds n_2 [r.p.m]	IE3 Output Torque M_2 [Nm]	Ratio i	IE3 Radial Loads (Output) F_{qam} [N]	IE3 Service Factors f_s	Type	Rated Current [A]	Weight ~ [kg]	Dim. Page	* Motor Eff. Class
1,5	420	33	**6,91**	1023	1,7	**MR002-3E90S/2B**	2,97	25	110	IE3
2,0	483	28	**6,00**	1008	1,8	**NR002-3E90S/2B**		27		
	521	26	**5,57**	1018	1,9	**MR002-2E90S/2A**	3,19	24		IE2
	637	22	**4,56**	949	2,1	**NR002-2E90S/2A**		26		
	744	19	**3,90**	960	2,4					
2,2	0,93	20133	**1552,10**	80517	0,9	**MR975-3E100L/4C**	4,65	1117	139	IE3
3,0	1,1	17763	**1368,27**	96442	1,0	**NR975-3E100L/4C**		1167		
	1,2	15770	**1213,85**	107571	1,1	**MR975-2E100L/4B**	4,85	1116		IE2
	1,3	14070	**1082,31**	115554	1,3	**NR975-2E100L/4B**		1166		
	1,6	11921	**914,74**	124687	1,5					
	1,7	10977	**842,80**	128448	1,6					
	1,9	9790	**750,24**	132559	1,8					
	2,2	8662	**662,54**	136320	2,1					
	2,5	7713	**588,87**	139289	2,3					
	2,7	7151	**546,94**	140965	2,5					
	2,8	6816	**510,11**	141940	2,6	**MR974-3E100L/4C**	4,65	1132	138	IE3
	3,2	6126	**457,99**	143886	2,9	**NR974-3E100L/4C**		1182		
	3,7	5221	**390,41**	146314	3,4	**MR974-2E100L/4B**	4,85	1131		IE2
						NR974-2E100L/4B		1181		
	1,2	15697	**1210,51**	53401	0,8	**MR875-3E100L/4C**	4,65	622	136	IE3
	1,4	13582	**1049,18**	68923	1,0	**NR875-3E100L/4C**		627		
	1,6	11869	**915,85**	78704	1,1	**MR875-2E100L/4B**	4,85	621		IE2
	1,8	10480	**807,91**	85242	1,2	**NR875-2E100L/4B**		626		
	2,0	9331	**718,74**	90183	1,4					
	2,5	7821	**390,74**	95889	1,7	**MR874-3E112M/6B**	4,95	606	135	IE3
	2,8	6931	**345,67**	98966	1,9	**NR874-3E112M/6B**		611		
						MR874-2E112M/6A	5,32	603		IE2
						NR874-2E112M/6A		608		
	3,2	5936	**446,42**	102173	2,2	**MR874-3E100L/4C**	4,65	607	135	IE3
	3,7	5205	**390,74**	104336	2,5	**NR874-3E100L/4C**		612		
	4,2	4612	**345,67**	105998	2,8	**MR874-2E100L/4B**	4,85	606		IE2
	5,0	3907	**292,15**	107872	3,3	**NR874-2E100L/4B**		611		
	6,1	3208	**239,61**	109927	4,0					
	2,4	7903	**594,92**	49168	1,0	**MR774-3E100L/4C**	4,65	331	132	IE3
	2,7	7073	**532,29**	52235	1,1	**NR774-3E100L/4C**		404		
	3,1	6222	**467,43**	55047	1,3	**MR774-2E100L/4B**	4,85	330		IE2
	3,5	5572	**418,17**	57040	1,4	**NR774-2E100L/4B**		403		
	4,0	4812	**361,62**	59086	1,7					
	4,6	4173	**313,11**	60698	1,9					
	5,3	3655	**273,85**	61916	2,2					
	6,0	3226	**241,42**	62867	2,5					
	6,8	2865	**214,17**	63629	2,8					
	7,6	2557	**190,96**	64253	3,1					
	4,9	4012	**196,61**	28019	1,1	**MR673-3E112M/6B**	4,95	196	128	IE3
	5,5	3573	**174,89**	30245	1,2	**NR673-3E112M/6B**		197		
	6,5	3050	**149,11**	32556	1,4	**MR673-2E112M/6A**	5,32	193		IE2
	7,8	2539	**124,07**	34480	1,7	**NR673-2E112M/6A**		194		
	8,7	2265	**110,55**	35446	1,9					

*: Geared motor prices are different for IE2 and IE3 motors.

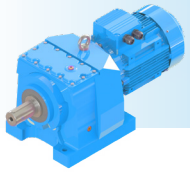

MR/MV/MN/NR/NV/NN - PERFORMANCE TABLES

Power P_g [kW] P_g [HP]	IE3 Output Speeds n_2 [r.p.m]	IE3 Output Torque M_2 [Nm]	Ratio i	IE3 Radial Loads (Output) F_{qam} [N]	IE3 Service Factors f_s	Type	Rated Current [A]	Weight ~ [kg]	Dim. Page	* Motor Eff. Class
2,2	5,0	3878	**291,25**	12487	0,8	**MR574-3E100L/4C**	4,65	150	126	IE3
3,0	5,6	3450	**258,87**	16573	0,9	**NR574-3E100L/4C**		156		
	6,5	2953	**221,40**	20078	1,0	**MR574-2E100L/4B**	4,85	149		IE2
						NR574-2E100L/4B		155		
	7,2	2748	**134,45**	21288	1,1	**MR573-3E112M/6B**	4,95	144	125	IE3
	8,1	2434	**118,95**	22947	1,2	**NR573-3E112M/6B**		150		
						MR573-2E112M/6A	5,32	141		IE2
						NR573-2E112M/6A		147		
	8,7	2280	**167,32**	23646	1,3	**MR573-3E100L/4C**	4,65	140	125	IE3
	9,4	2093	**153,61**	24525	1,4	**NR573-3E100L/4C**		146		
	11	1835	**134,45**	25569	1,6	**MR573-2E100L/4B**	4,85	139		IE2
	12	1625	**118,95**	26371	1,8	**NR573-2E100L/4B**		145		
	14	1376	**100,53**	24667	2,2					
	18	1129	**82,45**	28045	2,7					
	20	998	**72,81**	28440	3,0					
	22	888	**64,72**	27611	3,4					
	26	752	**54,74**	26326	4,0					
	30	671	**48,74**	25458	4,0					
	10	1905	**139,54**	8420	0,8	**MR473-3E100L/4C**	4,65	108	122	IE3
	12	1705	**124,85**	13075	0,9	**NR473-3E100L/4C**		111		
	13	1499	**109,64**	16237	1,0	**MR473-2E100L/4B**	4,85	109		IE2
	16	1254	**91,58**	17885	1,2	**NR473-2E100L/4B**		110		
	17	1185	**86,52**	17690	1,3					
	20	1002	**73,09**	17091	1,5					
	23	874	**63,70**	16584	1,8					
	26	767	**55,82**	16087	2,0					
	30	674	**49,05**	15595	2,3					
	34	588	**42,75**	15070	2,6					
	39	516	**37,45**	14566	3,0					
	47	427	**30,93**	13844	3,6					
	20	995	**72,81**	7973	0,8	**MR373-3E100L/4C**	4,65	67	119	IE3
	23	847	**61,91**	7909	1,0	**NR373-3E100L/4C**		68		
	27	727	**53,04**	7802	1,1	**MR373-2E100L/4B**	4,85	66		IE2
	30	658	**48,00**	7713	1,2	**NR373-2E100L/4B**		67		
	35	564	**41,16**	7552	1,5					
	41	484	**35,25**	7365	1,6					
	49	406	**29,47**	7127	1,8					
	57	348	**25,27**	6908	2,0					
	62	325	**23,33**	8493	2,5	**MR372-3E100L/4C**	4,65	66	119	IE3
	70	287	**20,62**	8112	2,7	**NR372-3E100L/4C**		69		
	79	257	**18,45**	7786	2,9	**MR372-2E100L/4B**	4,85	65		IE2
	90	226	**16,20**	7423	3,1	**NR372-2E100L/4B**		68		
	107	189	**13,53**	6953	3,5					
	116	174	**12,48**	6753	3,7					
	27	741	**54,12**	5713	0,8	**MR283-3E100L/4C**	4,65	60	116	IE3
	31	636	**46,37**	5867	0,9	**NR283-3E100L/4C**		62		
	35	576	**41,96**	5836	1,0	**MR283-2E100L/4B**	4,85	59		IE2
	40	493	**35,98**	5760	1,0	**NR283-2E100L/4B**		61		
	47	423	**30,82**	5657	1,1					

*: Geared motor prices are different for IE2 and IE3 motors.

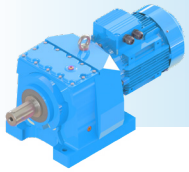

Power P_g [kW] P_g [HP]	IE3 Output Speeds n_2 [r.p.m]	IE3 Output Torque M_2 [Nm]	Ratio i	IE3 Radial Loads (Output) F_{qam} [N]	IE3 Service Factors f_s	Type	Rated Current [A]	Weight ~ [kg]	Dim. Page	* Motor Eff. Class
2,2 3,0	57	351	**25,23**	6888	1,5	**MR282-3E100L/4C**	4,65	57	116	IE3
	67	301	**21,66**	7074	1,7	**NR282-3E100L/4C**		61		
	76	265	**19,06**	6759	1,8	**MR282-2E100L/4B**	4,85	56		IE2
	86	236	**16,91**	6461	2,0	**NR282-2E100L/4B**		60		
	101	200	**14,31**	6071	2,2					
	118	171	**12,24**	5731	2,5					
	137	148	**10,57**	5430	2,8					
	151	135	**9,61**	5246	3,0					
	174	116	**8,33**	4981	3,3	**MR282-3E100L/4C**	4,65	57	116	IE3
						NR282-3E100L/4C		61		
						MR282-2E100L/4B	4,85	56		IE2
						NR282-2E100L/4B		60		
	40	501	**36,55**	1614	0,9	**MR273-3E100L/4C**	4,65	50	114	IE3
	48	419	**30,48**	2461	1,1	**NR273-3E100L/4C**		52		
	57	352	**25,55**	3087	1,2	**MR273-2E100L/4B**	4,85	49		IE2
						NR273-2E100L/4B		51		
	68	299	**21,43**	3552	1,5	**MR272-3E100L/4C**	4,65	48	114	IE3
	79	255	**18,33**	3855	1,7	**NR272-3E100L/4C**		50		
	90	224	**16,07**	4043	1,9	**MR272-2E100L/4B**	4,85	47		IE2
	102	198	**14,21**	4173	2,1	**NR272-2E100L/4B**		49		
	121	167	**11,95**	4290	2,3					
	143	142	**10,16**	4343	2,6					
	167	122	**8,71**	4150	3,0					
	233	87	**6,21**	3709	3,8					
	274	74	**5,28**	3493	3,6					
	59	339	**24,77**	1346	0,8	**MR203-3E100L/4C**	4,65	48	113	IE3
	62	318	**23,23**	1678	0,8	**NR203-3E100L/4C**		50		
						MR203-2E100L/4B	4,85	47		IE2
						NR203-2E100L/4B		49		
	72	279	**20,10**	3486	0,9	**MR202-3E100L/4C**	4,65	48	113	IE3
	77	262	**18,85**	3657	1,0	**NR202-3E100L/4C**		50		
	90	223	**16,03**	4011	1,1	**MR202-2E100L/4B**	4,85	47		IE2
	98	207	**14,86**	4140	1,2	**NR202-2E100L/4B**		49		
	104	194	**13,92**	4236	1,2					
	119	170	**12,18**	4389	1,3					
	134	151	**10,81**	4485	1,4					
	144	141	**10,07**	4525	1,5					
	173	117	**8,40**	4358	1,7					
	206	99	**7,04**	4078	1,9					
	250	81	**5,80**	3859	2,2					
	286	71	**5,08**	3669	2,3					
	322	63	**4,50**	3507	2,4					
	345	59	**4,20**	3417	2,5					
	414	49	**3,50**	3195	2,5					
	79	254	**18,28**	554	0,8	**MR172-3E100L/4C**	4,65	38	112	IE3
	85	239	**17,14**	724	0,8	**NR172-3E100L/4C**		40		
	99	203	**14,57**	1089	1,0	**MR172-2E100L/4B**	4,85	37		IE2
	115	177	**12,66**	1342	1,1	**NR172-2E100L/4B**		39		
	131	155	**11,08**	1534	1,2					
	152	133	**9,53**	1406	1,3					
	162	125	**8,94**	1483	1,3					
	191	106	**7,60**	1643	1,5					
	205	99	**7,08**	1699	1,6					

*: Geared motor prices are different for IE2 and IE3 motors.

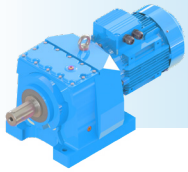

MR/MV/MN/NR/NV/NN - PERFORMANCE TABLES

Power P_g [kW] P_g [HP]	IE3 Output Speeds n_2 [r.p.m]	IE3 Output Torque M_2 [Nm]	Ratio i	IE3 Radial Loads (Output) F_{qam} [N]	IE3 Service Factors f_s	Type	Rated Current [A]	Weight ~ [kg]	Dim. Page	* Motor Eff. Class
2,2	220	92	**6,60**	1745	1,6	**MR172-3E100L/4C**	4,65	38	112	IE3
3,0	251	81	**5,78**	1816	1,7	**NR172-3E100L/4C**		40		
	303	67	**4,78**	1882	1,9	**MR172-2E100L/4B**	4,85	37		IE2
	355	57	**4,09**	1807	2,1	**NR172-2E100L/4B**		39		
	429	47	**3,38**	1833	2,3					
	439	46	**6,60**	1916	2,7	**MR172-3E90L/2C**	4,25	31	112	IE3
	502	40	**5,78**	1906	3,0	**NR172-3E90L/2C**		33		
	607	33	**4,78**	1867	3,3	**MR172-2E90L/2B**	4,48	30		IE2
	710	29	**4,09**	1777	3,5	**NR172-2E90L/2B**		32		
3,0	1,2	21504	**1213,85**	68484	0,8	**MR975-3E100L/4D**	6,26	1131	139	IE3
4,0	1,3	19187	**1082,31**	87173	0,9	**NR975-3E100L/4D**		1181		
	1,6	16256	**914,74**	105024	1,1	**MR975-2E100L/4C**	6,42	1129		IE2
	1,7	14968	**842,80**	111316	1,2	**NR975-2E100L/4C**		1179		
	1,9	13350	**750,24**	118765	1,3					
	2,2	11812	**662,54**	125117	1,5					
	2,5	10517	**588,87**	129906	1,7					
	2,7	9752	**546,94**	132691	1,8					
	2,8	9295	**510,11**	134243	1,9	**MR974-3E100L/4D**	6,26	1145	138	IE3
	3,2	8353	**457,99**	137305	2,2	**NR974-3E100L/4D**		1195		
	3,7	7119	**390,41**	141059	2,5	**MR974-2E100L/4C**	6,42	1143		IE2
	4,2	6284	**344,17**	143447	2,9	**NR974-2E100L/4C**		1193		
	4,7	5581	**305,33**	145364	3,2					
	2,8	9402	**345,67**	90007	1,4	**MR874-3E132S/6B**	6,55	619	135	IE3
						NR874-3E132S/6B		624		
						MR874-2E132S/6A	6,85	614		IE2
						NR874-2E132S/6A		619		
	3,2	8095	**446,42**	95060	1,6	**MR874-3E100L/4D**	6,26	604	135	IE3
	3,7	7098	**390,74**	98451	1,8	**NR874-3E100L/4D**		609		
	4,2	6290	**345,67**	101078	2,1	**MR874-2E100L/4C**	6,42	602		IE2
	5,0	5327	**292,15**	103984	2,4	**NR874-2E100L/4C**		607		
	6,1	4374	**239,61**	106644	3,0					
	6,9	3869	**211,60**	107969	3,4					
	7,7	3444	**188,08**	109043	3,8					
	8,3	3193	**174,68**	110099	4,0					
	9,8	2705	**147,61**	115458	4,0					
	12	2308	**125,70**	118854	4,0					
	13	1980	**107,60**	121258	4,0					
	3,5	7598	**418,17**	50336	1,1	**MR774-3E100L/4D**	6,26	320	132	IE3
	4,0	6562	**361,62**	53959	1,2	**NR774-3E100L/4D**		391		
						MR774-2E100L/4C	6,42	318		IE2
						NR774-2E100L/4C		389		
	4,6	5781	**208,82**	56440	1,4	**MR773-3E132S/6B**	6,55	317	131	IE3
	5,4	4956	**178,78**	58748	1,6	**NR773-3E132S/6B**		383		
	6,5	4124	**148,73**	60850	1,9	**MR773-2E132S/6A**	6,85	312		IE2
	7,3	3693	**133,05**	61793	2,2	**NR773-2E132S/6A**		378		
	8,4	3191	**115,06**	63024	2,5					
	9,7	2767	**99,63**	63850	2,9					
	11	2423	**87,13**	64534	3,3					
	13	2139	**76,81**	65077	3,7					
	14	1899	**68,15**	66229	4,0					

*: Geared motor prices are different for IE2 and IE3 motors.

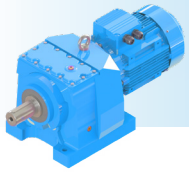

Power P_g [kW] P_g [HP]	IE3 Output Speeds n_2 [r.p.m]	IE3 Output Torque M_2 [Nm]	Ratio i	IE3 Radial Loads (Output) F_{qam} [N]	IE3 Service Factors f_s	Type	Rated Current [A]	Weight ~ [kg]	Dim. Page	* Motor Eff. Class
3,0	6,5	4135	**149,11**	27341	1,0	**MR673-3E132S/6B**	6,55	226	128	IE3
4,0	7,8	3441	**124,07**	30850	1,2	**NR673-3E132S/6B**		228		
	8,8	3070	**110,55**	32471	1,4	**MR673-2E132S/6A**	6,85	221		IE2
	10	2613	**94,17**	34257	1,6	**NR673-2E132S/6A**		223		
	12	2249	**80,96**	35537	1,9					
	14	1955	**70,26**	36494	2,2					
	16	1711	**61,42**	37234	2,5					
	18	1506	**53,99**	36465	2,9					
	18	1468	**52,68**	36219	2,9					
	21	1264	**45,29**	34729	3,4					
	25	1099	**39,30**	33361	3,9					
	28	962	**34,36**	32093	4,0					
	7,5	3538	**194,15**	15818	0,8	**MR574-3E100L/4D**	6,26	154	126	IE3
						NR574-3E100L/4D		148		
						MR574-2E100L/4C	6,42	152		IE2
						NR574-2E100L/4C		146		
	8,7	3111	**167,32**	19059	1,0	**MR573-3E100L/4D**	6,26	144	125	IE3
	9,4	2856	**153,61**	20666	1,1	**NR573-3E100L/4D**		138		
	11	2503	**134,45**	22555	1,2	**MR573-2E100L/4C**	6,42	142		IE2
	12	2217	**118,95**	23939	1,4	**NR573-2E100L/4C**		136		
	14	1877	**100,53**	25413	1,6					
	18	1540	**82,45**	26678	1,9					
	20	1362	**72,81**	27295	2,2					
	22	1212	**64,72**	26831	2,5					
	26	1027	**54,74**	25667	2,9					
	30	916	**48,74**	24870	3,3					
	36	751	**39,98**	23535	3,8					
	41	664	**35,31**	22718	4,0					
	46	591	**31,38**	21958	4,0					
	16	1711	**91,58**	12963	0,9	**MR473-3E100L/4D**	6,26	109	122	IE3
	17	1617	**86,52**	14572	1,0	**NR473-3E100L/4D**		112		
	20	1367	**73,09**	15967	1,1	**MR473-2E100L/4C**	6,42	107		IE2
	23	1192	**63,70**	15605	1,3	**NR473-2E100L/4C**		110		
	26	1046	**55,82**	15229	1,5					
	30	920	**49,05**	14841	1,7					
	34	803	**42,75**	14412	1,9					
	39	704	**37,45**	13990	2,2					
	44	628	**22,15**	13591	2,5	**MR472-3E132S/6B**	6,55	119	122	IE3
	52	531	**18,72**	13041	2,9	**NR472-3E132S/6B**		122		
	56	489	**17,25**	12773	3,0	**MR472-2E132S/6A**	6,85	114		IE2
	63	436	**15,35**	12394	3,3	**NR472-2E132S/6A**		117		
	27	991	**53,04**	6831	0,8	**MR373-3E100L/4D**	6,26	69	119	IE3
	30	898	**48,00**	6834	0,9	**NR373-3E100L/4D**		72		
	35	769	**41,16**	6798	1,1	**MR373-2E100L/4C**	6,42	67		IE2
	41	660	**35,25**	6719	1,2	**NR373-2E100L/4C**		70		
	49	554	**29,47**	6587	1,4					
	57	475	**25,27**	6445	1,5					
	62	443	**23,33**	8279	1,8	**MR372-3E100L/4D**	6,26	67	119	IE3
	70	392	**20,62**	8271	2,0	**NR372-3E100L/4D**		69		
	79	351	**18,45**	7929	2,1	**MR372-2E100L/4C**	6,42	65		IE2
	90	308	**16,20**	7551	2,3	**NR372-2E100L/4C**		67		
	107	258	**13,53**	7061	2,6					
	116	238	**12,48**	6852	2,7					
	134	206	**10,80**	6498	3,0					

*: Geared motor prices are different for IE2 and IE3 motors.

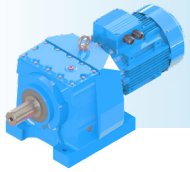

MR/MV/MN/NR/NV/NN - PERFORMANCE TABLES

Power P_g [kW] P_g [HP]	IE3 Output Speeds n_2 [r.p.m]	IE3 Output Torque M_2 [Nm]	Ratio i	IE3 Radial Loads (Output) F_{qam} [N]	IE3 Service Factors f_s	Type	Rated Current [A]	Weight ~ [kg]	Dim. Page	* Motor Eff. Class
3,0	154	180	**9,41**	6179	3,3	**MR372-3E100L/4D**	6,26	67	119	IE3
4,0	176	158	**8,25**	5890	3,6	**NR372-3E100L/4D**		69		
						MR372-2E100L/4C	6,42	65		IE2
						NR372-2E100L/4C		67		
	47	578	**30,82**	5034	0,8	**MR283-3E100L/4D**	6,26	61	116	IE3
						NR283-3E100L/4D		63		
						MR283-2E100L/4C	6,42	59		IE2
						NR283-2E100L/4C		61		
	57	479	**25,23**	4803	1,1	**MR282-3E100L/4D**	6,26	59	116	IE3
	67	411	**21,66**	5284	1,2	**NR282-3E100L/4D**		61		
	76	362	**19,06**	5589	1,3	**MR282-2E100L/4C**	6,42	57		IE2
	86	322	**16,91**	5806	1,5	**NR282-2E100L/4C**		59		
	101	272	**14,31**	6014	1,6					
	118	233	**12,24**	5838	1,8					
	137	202	**10,57**	5523	2,0					
	151	184	**9,61**	5331	2,2					
	174	159	**8,33**	5055	2,5					
	201	138	**7,21**	4794	2,7					
	232	119	**6,25**	4614	3,0					
	271	102	**5,35**	4355	3,1					
	314	88	**4,62**	4125	3,2					
	345	80	**4,20**	3985	3,2					
	398	70	**3,64**	3783	3,5					
	57	480	**25,55**	855	0,9	**MR273-3E100L/4D**	6,26	51	114	IE3
						NR273-3E100L/4D		53		
						MR273-2E100L/4C	6,42	49		IE2
						NR273-2E100L/4C		51		
	68	407	**21,43**	1680	1,1	**MR272-3E100L/4D**	6,26	50	114	IE3
	79	348	**18,33**	2254	1,3	**NR272-3E100L/4D**		52		
	90	306	**16,07**	2639	1,4	**MR272-2E100L/4C**	6,42	48		IE2
	102	271	**14,21**	2932	1,5	**NR272-2E100L/4C**		50		
	121	228	**11,95**	3246	1,7					
	143	194	**10,16**	3455	1,9					
	167	166	**8,71**	3591	2,2					
	233	119	**6,21**	3454	2,8					
	274	101	**5,28**	3496	2,6					
	320	87	**4,53**	3357	2,7					
	90	304	**16,03**	2273	0,8	**MR202-3E100L/4D**	6,26	50	113	IE3
	98	283	**14,86**	2529	0,8	**NR202-3E100L/4D**		52		
	104	265	**13,92**	2726	0,9	**MR202-2E100L/4C**	6,42	48		IE2
	119	232	**12,18**	3069	1,0	**NR202-2E100L/4C**		50		
	134	206	**10,81**	3314	1,0					
	144	192	**10,07**	3434	1,1					
	173	160	**8,40**	3671	1,2					
	206	134	**7,04**	3819	1,4					
	250	111	**5,80**	3447	1,6					
	286	97	**5,08**	3527	1,7					
	322	86	**4,50**	3570	1,7					
	345	80	**4,20**	3489	1,8					
	414	67	**3,50**	3255	1,9					
	502	55	**5,80**	3026	2,5	**MR202-3E100L/2C**	5,58	48	113	IE3
	574	48	**5,08**	2879	2,6	**NR202-3E100L/2C**		50		
	647	43	**4,50**	2755	2,8	**MR202-2E100L/2B**	5,80	46		IE2
	694	40	**4,20**	2684	2,9	**NR202-2E100L/2B**		48		

*: Geared motor prices are different for IE2 and IE3 motors.

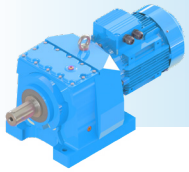

Power P_g [kW] P_g [HP]	IE3 Output Speeds n_2 [r.p.m]	IE3 Output Torque M_2 [Nm]	Ratio i	IE3 Radial Loads (Output) F_{qam} [N]	IE3 Service Factors f_s	Type	Rated Current [A]	Weight ~ [kg]	Dim. Page	* Motor Eff. Class
3,0 4,0	115	241	**12,66**	225	0,8	**MR172-3E100L/4D**	6,26	40	112	IE3
	131	211	**11,08**	556	0,9	**NR172-3E100L/4D**		41		
	152	182	**9,53**	458	0,9	**MR172-2E100L/4C**	6,42	38		IE2
	162	170	**8,94**	594	1,0	**NR172-2E100L/4C**		39		
	191	145	**7,60**	887	1,1					
	205	135	**7,08**	995	1,1					
	220	126	**6,60**	1088	1,2					
	251	110	**5,78**	1242	1,2					
	303	91	**4,78**	1406	1,4					
	355	78	**4,09**	1364	1,5					
	429	65	**3,38**	1466	1,7					
	441	63	**6,60**	1589	2,0	**MR172-3E100L/2C**	5,58	40	112	IE3
	505	55	**5,78**	1619	2,2	**NR172-3E100L/2C**		41		
	610	45	**4,78**	1640	2,4	**MR172-2E100L/2B**	5,80	38		IE2
	713	39	**4,09**	1571	2,6	**NR172-2E100L/2B**		39		
4,0 5,5	1,7	19821	**842,80**	82433	0,9	**MR975-3E112M/4D**	8,05	1137	139	IE3
	1,9	17678	**750,24**	97186	1,0	**NR975-3E112M/4D**		1187		
	2,2	15641	**662,54**	108230	1,2	**MR975-2E112M/4C**	8,20	1135		IE2
	2,5	13927	**588,87**	116428	1,3	**NR975-2E112M/4C**		1185		
	2,7	12913	**546,94**	120825	1,4					
	2,9	12308	**510,11**	123313	1,5	**MR974-3E112M/4D**	8,05	1187	138	IE3
	3,2	11061	**457,99**	128136	1,6	**NR974-3E112M/4D**		1237		
	3,7	9428	**390,41**	133687	1,9	**MR974-2E112M/4C**	8,20	1185		IE2
	4,2	8321	**344,17**	137316	2,2	**NR974-2E112M/4C**		1235		
	4,8	7390	**305,33**	140184	2,4					
	5,4	6596	**272,24**	142505	2,7					
	6,8	5244	**216,03**	146207	3,4					
	2,8	12536	**345,67**	75126	1,0	**MR874-3E132M/6C**	8,52	627	135	IE3
	3,3	10618	**292,15**	84759	1,2	**NR874-3E132M/6C**		632		
						MR874-2E132M/6B	8,80	622		IE2
						NR874-2E132M/6B		627		
	3,7	9399	**390,74**	90037	1,4	**MR874-3E112M/4D**	8,05	623	135	IE3
	4,2	8329	**345,67**	94199	1,6	**NR874-3E112M/4D**		628		
	5,0	7055	**292,15**	98633	1,8	**MR874-2E112M/4C**	8,20	621		IE2
	6,1	5792	**239,61**	102551	2,2	**NR874-2E112M/4C**		626		
	7,8	4561	**188,08**	106097	2,9					
	8,4	4228	**174,68**	106993	3,1					
	8,8	4078	**110,17**	107463	3,2	**MR873-3E132M/6C**	8,52	592	134	IE3
	9,7	3695	**99,81**	108446	3,5	**NR873-3E132M/6C**		597		
						MR873-2E132M/6B	8,80	587		IE2
						NR873-2E132M/6B		592		
	4,6	7714	**208,82**	49983	1,0	**MR773-3E132M/6C**	8,52	329	131	IE3
	5,4	6614	**178,78**	53856	1,2	**NR773-3E132M/6C**		397		
	6,5	5504	**148,73**	57240	1,5	**MR773-2E132M/6B**	8,80	324		IE2
	7,3	4929	**133,05**	58820	1,6	**NR773-2E132M/6B**		392		
	8,4	4259	**115,06**	60524	1,9					
	9,7	3693	**99,63**	61795	2,2					
	11	3234	**87,13**	62923	2,5					
	13	2854	**76,81**	63672	2,8					
	14	2535	**68,15**	64315	3,2					

*: Geared motor prices are different for IE2 and IE3 motors.

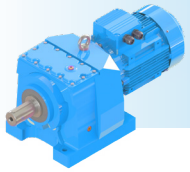

MR/MV/MN/NR/NV/NN - PERFORMANCE TABLES

Power P_g [kW] P_g [HP]	IE3 Output Speeds n_2 [r.p.m]	IE3 Output Torque M_2 [Nm]	Ratio i	IE3 Radial Loads (Output) F_{qam} [N]	IE3 Service Factors f_s	Type	Rated Current [A]	Weight ~ [kg]	Dim. Page	* Motor Eff. Class
4,0 5,5	8,3	4310	**174,89**	26324	1,0	**MR673-3E112M/4D**	8,05	224	128	IE3
	9,8	3680	**149,11**	29726	1,2	**NR673-3E112M/4D**		233		
	12	3064	**124,07**	32500	1,4	**MR673-2E112M/4C**	8,20	222		IE2
	13	2733	**110,55**	33811	1,6	**NR673-2E112M/4C**		231		
	16	2283	**61,42**	35422	1,9	**MR673-3E132M/6C**	8,52	224	128	IE3
	18	2009	**53,99**	35379	2,1	**NR673-3E132M/6C**		232		
	18	1960	**52,68**	35160	2,2	**MR673-2E132M/6B**	8,80	219		IE2
	21	1687	**45,29**	33818	2,5	**NR673-2E132M/6B**		227		
	25	1466	**39,30**	32570	2,9					
	28	1284	**34,36**	31402	3,3					
	32	1130	**30,20**	30300	3,7					
	12	2937	**118,95**	20176	1,0	**MR573-3E112M/4D**	8,05	149	125	IE3
	15	2486	**100,53**	22685	1,2	**NR573-3E112M/4D**		143		
	18	2040	**82,45**	24752	1,5	**MR573-2E112M/4C**	8,20	147		IE2
	20	1804	**72,81**	25715	1,7	**NR573-2E112M/4C**		141		
	23	1605	**64,72**	25814	1,9					
	27	1360	**54,74**	24800	2,2					
	30	1213	**48,74**	24094	2,5					
	37	995	**39,98**	22891	2,9					
	41	880	**35,31**	22145	3,1					
	47	783	**31,38**	21445	3,4					
	54	681	**27,00**	20567	4,0	**MR572-3E112M/4D**	8,05	142	125	IE3
	63	581	**23,02**	19657	4,0	**NR572-3E112M/4D**		136		
						MR572-2E112M/4C	8,20	140		IE2
						NR572-2E112M/4C		134		
	20	1810	**73,09**	10931	0,9	**MR473-3E112M/4D**	8,05	122	122	IE3
	23	1580	**63,70**	14370	1,0	**NR473-3E112M/4D**		130		
	26	1386	**55,82**	14143	1,1	**MR473-2E112M/4C**	8,20	120		IE2
	30	1219	**49,05**	13884	1,3	**NR473-2E112M/4C**		128		
	34	1064	**42,75**	13575	1,5					
	39	933	**37,45**	13253	1,7					
	47	772	**30,93**	12756	2,0					
	57	642	**25,67**	12247	2,4					
	66	559	**22,15**	11834	2,6	**MR472-3E112M/4D**	8,05	115	122	IE3
	78	473	**18,72**	11358	3,1	**NR472-3E112M/4D**		123		
	85	435	**17,25**	11126	3,0	**MR472-2E112M/4C**	8,20	113		IE2
	95	388	**15,35**	10797	3,2	**NR472-2E112M/4C**		121		
	41	874	**35,25**	5913	0,9	**MR373-3E112M/4D**	8,05	76	119	IE3
	50	734	**29,47**	5910	1,0	**NR373-3E112M/4D**		78		
	58	629	**25,27**	5863	1,1	**MR373-2E112M/4C**	8,20	74		IE2
	67	539	**21,65**	5782	1,2	**NR373-2E112M/4C**		76		
	71	520	**20,62**	6457	1,5	**MR372-3E112M/4D**	8,05	76	119	IE3
	79	465	**18,45**	6779	1,6	**NR372-3E112M/4D**		79		
	90	409	**16,20**	7066	1,7	**MR372-2E112M/4C**	8,20	74		IE2
	108	342	**13,53**	7172	2,0	**NR372-2E112M/4C**		77		
	117	315	**12,48**	6955	2,1					
	135	273	**10,80**	6586	2,3					
	155	238	**9,41**	6257	2,5					
	177	209	**8,25**	5957	2,7					
	213	173	**6,84**	5605	3,2					

*: Geared motor prices are different for IE2 and IE3 motors.

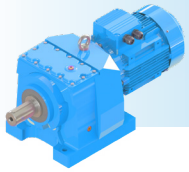

Power P_g [kW] P_g [HP]	IE3 Output Speeds n_2 [r.p.m]	IE3 Output Torque M_2 [Nm]	Ratio i	IE3 Radial Loads (Output) F_{qam} [N]	IE3 Service Factors f_s	Type	Rated Current [A]	Weight ~ [kg]	Dim. Page	* Motor Eff. Class
4,0 5,5	77	480	**19,06**	3648	1,0	**MR282-3E112M/4D**	8,05	69	116	IE3
	86	426	**16,91**	4081	1,1	**NR282-3E112M/4D**		71		
	102	361	**14,31**	4552	1,2	**MR282-2E112M/4C**	8,20	67		IE2
	119	309	**12,24**	4872	1,4	**NR282-2E112M/4C**		69		
	138	267	**10,57**	5086	1,5					
	152	243	**9,61**	5184	1,6					
	175	211	**8,33**	5133	1,9					
	202	183	**7,21**	4861	2,0					
	234	158	**6,25**	4693	2,3					
	273	135	**5,35**	4422	2,4					
	316	117	**4,62**	4182	2,4					
	348	107	**4,20**	4037	2,4					
	401	92	**3,64**	3827	2,6					
	463	80	**3,15**	3629	2,8					
	545	68	**5,35**	3420	3,8	**MR282-3E112M/2C**	7,28	69	116	IE3
						NR282-3E112M/2C		70		
						MR282-2E112M/2A	7,50	66		IE2
						NR282-2E112M/2A		67		
	77	472	**19,00**	-	0,9	**MR273-3E112M/4D**	8,05	59	114	IE3
						NR273-3E112M/4D		61		
						MR273-2E112M/4C	8,20	57		IE2
						NR273-2E112M/4C		59		
	91	405	**16,07**	914	1,0	**MR272-3E112M/4D**	8,05	59	114	IE3
	103	359	**14,21**	1405	1,1	**NR272-3E112M/4D**		61		
	122	302	**11,95**	1960	1,3	**MR272-2E112M/4C**	8,20	57		IE2
	144	257	**10,16**	2361	1,5	**NR272-2E112M/4C**		59		
	168	221	**8,71**	2652	1,6					
	235	157	**6,21**	2693	2,1					
	276	134	**5,28**	2848	2,0					
	323	115	**4,53**	2946	2,0					
	469	79	**6,21**	2962	3,6	**MR272-3E112M/2C**	7,28	58	114	IE3
	552	67	**5,28**	2788	2,9	**NR272-3E112M/2C**		60		
	644	58	**4,53**	2633	3,1	**MR272-2E112M/2A**	7,50	55		IE2
						NR272-2E112M/2A		57		
	135	273	**10,81**	1872	0,8	**MR202-3E112M/4D**	8,05	59	113	IE3
	145	254	**10,07**	2088	0,8	**NR202-3E112M/4D**		61		
	174	212	**8,40**	2548	0,9	**MR202-2E112M/4C**	8,20	57		IE2
	207	178	**7,04**	2875	1,0	**NR202-2E112M/4C**		59		
	252	146	**5,80**	2520	1,2					
	288	128	**5,08**	2714	1,2					
	324	114	**4,50**	2849	1,3					
	348	106	**4,20**	2912	1,4					
	417	89	**3,50**	3030	1,4					
	502	73	**5,80**	3088	1,8	**MR202-3E112M/2C**	7,28	56	113	IE3
	574	64	**5,08**	2934	1,9	**NR202-3E112M/2C**		58		
	647	57	**4,50**	2803	2,1	**MR202-2E112M/2A**	7,50	53		IE2
	694	53	**4,20**	2729	2,2	**NR202-2E112M/2A**		55		
	206	179	**7,08**	130	0,9	**MR172-3E112M/4D**	8,05	49	112	IE3
	221	167	**6,60**	282	0,9	**NR172-3E112M/4D**		51		
	253	146	**5,78**	535	0,9	**MR172-2E112M/4C**	8,20	47		IE2
	306	121	**4,78**	821	1,1	**NR172-2E112M/4C**		49		
	357	104	**4,09**	817	1,2					

*: Geared motor prices are different for IE2 and IE3 motors.

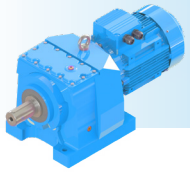

MR/MV/MN/NR/NV/NN - PERFORMANCE TABLES

Power P_g [kW] P_g [HP]	IE3 Output Speeds n_2 [r.p.m]	IE3 Output Torque M_2 [Nm]	Ratio i	IE3 Radial Loads (Output) F_{qam} [N]	IE3 Service Factors f_s	Type	Rated Current [A]	Weight ~ [kg]	Dim. Page	* Motor Eff. Class
4,0 5,5	432	86	**3,38**	1013	1,3	**MR172-3E112M/4D** **NR172-3E112M/4D** **MR172-2E112M/4C** **NR172-2E112M/4C**	8,05 8,20 	49 51 47 49	112	IE3 IE2
	441 505 610 713	84 73 61 52	**6,60** **5,78** **4,78** **4,09**	1180 1262 1344 1295	1,5 1,6 1,8 1,9	**MR172-3E112M/2C** **NR172-3E112M/2C** **MR172-2E112M/2A** **NR172-2E112M/2A**	7,28 7,50 	47 49 44 46	112	IE3 IE2
5,5 7,5	2,2 2,5 2,7	21507 19149 17756	**662,54** **588,87** **546,94**	68481 87436 96484	0,8 0,9 1,0	**MR975-3E132S/4C** **NR975-3E132S/4C** **MR975-2E132S/4B** **NR975-2E132S/4B**	10,65 11,05 	1167 1217 1161 1211	139	IE3 IE2
	2,9 3,2 3,7 4,2 4,8 5,4 6,8 7,6 8,5	16923 15209 12963 11441 10161 9070 7210 6458 5765	**510,11** **457,99** **390,41** **344,17** **305,33** **272,24** **216,03** **193,13** **172,08**	101358 110131 120425 126552 131221 135142 140792 142959 144871	1,1 1,2 1,4 1,6 1,8 2,0 2,5 2,8 3,1	**MR974-3E132S/4C** **NR974-3E132S/4C** **MR974-2E132S/4B** **NR974-2E132S/4B**	10,65 11,05 	1217 1267 1211 1261	138	IE3 IE2
	4,2 5,0 6,1 6,9 7,8 8,4 9,9 12	11452 9700 7964 7044 6271 5814 4925 4203	**345,67** **292,15** **239,61** **211,60** **188,08** **174,68** **147,61** **125,70**	80614 88651 95432 98670 101138 102544 105133 107100	1,1 1,3 1,6 1,8 2,1 2,2 2,6 3,1	**MR874-3E132S/4C** **NR874-3E132S/4C** **MR874-2E132S/4B** **NR874-2E132S/4B**	10,65 11,05 	632 637 626 631	135	IE3 IE2
	6,5	7573	**148,73**	50526	1,1	**MR773-3E132M/6D** **NR773-3E132M/6D** **MR773-2E132M/6C** **NR773-2E132M/6C**	11,55 12,00 	329 397 324 392	131	IE3 IE2
	7,0 8,2 9,8 11 13 15 17 19 21	7075 6066 5049 4521 3907 3388 2967 2619 2326	**208,82** **178,78** **148,73** **133,05** **115,06** **99,63** **87,13** **76,81** **68,15**	52227 55529 58498 59836 61334 62514 63418 64130 64706	1,1 1,3 1,6 1,8 2,0 2,4 2,7 3,1 3,4	**MR773-3E132S/4C** **NR773-3E132S/4C** **MR773-2E132S/4B** **NR773-2E132S/4B**	10,65 11,05 	337 405 331 399	131	IE3 IE2
	12 13 16 18 21 24 27 28 32 37	4213 3758 3199 2754 2394 2095 1844 1799 1549 1346	**124,07** **110,55** **94,17** **80,96** **70,26** **61,42** **53,99** **52,68** **45,29** **39,30**	26896 29275 31883 33692 32677 31668 30693 30506 29360 28291	1,0 1,1 1,3 1,6 1,8 2,1 2,3 2,4 2,7 3,0	**MR673-3E132S/4C** **NR673-3E132S/4C** **MR673-2E132S/4B** **NR673-2E132S/4B**	10,65 11,05 	248 258 242 252	128	IE3 IE2

*: Geared motor prices are different for IE2 and IE3 motors.

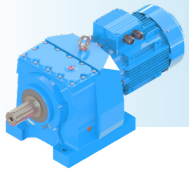

Power P_g [kW] P_g [HP]	IE3 Output Speeds n_2 [r.p.m]	IE3 Output Torque M_2 [Nm]	Ratio i	IE3 Radial Loads (Output) F_{qam} [N]	IE3 Service Factors f_s	Type	Rated Current [A]	Weight ~ [kg]	Dim. Page	* Motor Eff. Class
5,5	42	1178	**34,36**	27288	3,2	**MR673-3E132S/4C**	10,65	248	128	IE3
7,5	48	1037	**30,20**	26340	3,5	**NR673-3E132S/4C**		258		
						MR673-2E132S/4B	11,05	242		IE2
						NR673-2E132S/4B		252		
	18	2806	**82,45**	20959	1,1	**MR573-3E132S/4C**	10,65	176	125	IE3
	20	2481	**72,81**	22669	1,2	**NR573-3E132S/4C**		170		
	23	2207	**64,72**	23984	1,4	**MR573-2E132S/4B**	11,05	170		IE2
	27	1870	**54,74**	23571	1,6	**NR573-2E132S/4B**		164		
	30	1669	**48,74**	23000	1,8					
	37	1368	**39,98**	21994	2,1					
	41	1210	**35,31**	21352	2,3					
	47	1077	**31,38**	20741	2,5					
	54	937	**27,00**	19961	2,9	**MR572-3E132S/4C**	10,65	167	125	IE3
	63	800	**23,02**	19140	3,3	**NR572-3E132S/4C**		160		
	54	937	**27,00**	19961	2,9	**MR572-2E132S/4B**	11,05	161		IE2
	63	800	**23,02**	19140	3,3	**NR572-2E132S/4B**		154		
	76	666	**19,15**	18208	3,8					
	86	594	**17,07**	17634	4,0					
	26	1906	**55,82**	8412	0,8	**MR473-3E132S/4C**	10,65	143	122	IE3
	30	1676	**49,05**	12479	0,9	**NR473-3E132S/4C**		145		
	34	1463	**42,75**	12351	1,1	**MR473-2E132S/4B**	11,05	137		IE2
	39	1283	**37,45**	12181	1,2	**NR473-2E132S/4B**		139		
	47	1062	**30,93**	11870	1,5					
	57	882	**25,67**	11512	1,8					
	66	769	**22,15**	11200	1,9	**MR472-3E132S/4C**	10,65	138	122	IE3
	78	650	**18,72**	10822	2,2	**NR472-3E132S/4C**		141		
	85	599	**17,25**	10632	2,2	**MR472-2E132S/4B**	11,05	132		IE2
	95	534	**15,35**	10358	2,3	**NR472-2E132S/4B**		135		
	108	472	**13,56**	10060	2,6					
	121	420	**12,05**	9776	2,8					
	135	375	**10,79**	9455	2,9					
	153	332	**9,53**	9162	3,2					
	58	865	**25,27**	5001	0,8	**MR373-3E132S/4C**	10,65	97	119	IE3
	67	742	**21,65**	5044	0,9	**NR373-3E132S/4C**		99		
	71	707	**20,64**	4882	0,9	**MR373-2E132S/4B**	11,05	91		IE2
	78	641	**18,68**	4894	1,0	**NR373-2E132S/4B**		93		
	90	562	**16,20**	4684	1,3	**MR372-3E132S/4C**	10,65	97	119	IE3
	108	470	**13,53**	5341	1,4	**NR372-3E132S/4C**		99		
	117	433	**12,48**	5572	1,5	**MR372-2E132S/4B**	11,05	91		IE2
	135	375	**10,80**	5899	1,7	**NR372-2E132S/4B**		93		
	155	328	**9,41**	6122	1,8					
	177	287	**8,25**	6076	1,9					
	213	238	**6,84**	5720	2,3					
	245	208	**5,97**	5429	2,5					
	279	182	**5,23**	5165	2,8					
	295	173	**4,96**	5131	2,7					
	340	150	**4,29**	4857	3,0					
	390	131	**3,74**	4612	3,1					
	311	163	**9,41**	4921	2,8	**MR372-3E132S/2B**	9,90	90	119	IE3
	355	143	**8,25**	4688	3,1	**NR372-3E132S/2B**		92		
	428	119	**6,84**	4410	3,6	**MR372-2E132S/2A**	10,20	86		IE2
	491	103	**5,97**	4194	4,0	**NR372-2E132S/2A**		88		

*: Geared motor prices are different for IE2 and IE3 motors.

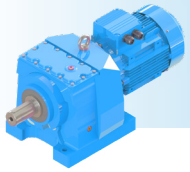

MR/MV/MN/NR/NV/NN - PERFORMANCE TABLES

Power P_g [kW] P_g [HP]	IE3 Output Speeds n_2 [r.p.m]	IE3 Output Torque M_2 [Nm]	Ratio i	IE3 Radial Loads (Output) F_{qam} [N]	IE3 Service Factors f_s	Type	Rated Current [A]	Weight ~ [kg]	Dim. Page	* Motor Eff. Class
5,5	561	91	**5,23**	3998	4,0	**MR372-3E132S/2B**	9,90	90	119	IE3
7,5	591	86	**4,96**	3956	4,0	**NR372-3E132S/2B**		92		
	683	74	**4,29**	3753	4,0	**MR372-2E132S/2A**	10,20	86		IE2
	784	65	**3,74**	3571	4,0	**NR372-2E132S/2A**		88		
	102	496	**14,31**	2350	0,9	**MR282-3E132S/4C**	10,65	90	116	IE3
	119	425	**12,24**	2987	1,0	**NR282-3E132S/4C**		92		
	138	367	**10,57**	3459	1,1	**MR282-2E132S/4B**	11,05	84		IE2
	152	335	**9,61**	3705	1,2	**NR282-2E132S/4B**		86		
	175	290	**8,33**	4003	1,3					
	202	251	**7,21**	4226	1,5					
	234	217	**6,25**	3795	1,7					
	273	186	**5,35**	3989	1,7					
	316	161	**4,62**	4111	1,7					
	348	147	**4,20**	4128	1,8					
	401	127	**3,64**	3906	1,9					
	463	110	**3,15**	3698	2,0					
	551	92	**5,35**	3466	2,8	**MR282-3E132S/2B**	9,90	84	116	IE3
	638	80	**4,62**	3281	2,9	**NR282-3E132S/2B**		86		
	701	72	**4,20**	3168	2,9	**MR282-2E132S/2A**	10,20	80		IE2
						NR282-2E132S/2A		82		
	122	415	**11,95**	-	0,9	**MR272-3E132S/4C**	10,65	81	114	IE3
	144	354	**10,16**	708	1,1	**NR272-3E132S/4C**		83		
	168	303	**8,71**	1236	1,2	**MR272-2E132S/4B**	11,05	75		IE2
	235	216	**6,21**	1548	1,5	**NR272-2E132S/4B**		77		
	276	184	**5,28**	1874	1,4					
	323	158	**4,53**	2112	1,5					
	396	129	**3,69**	2087	1,6					
	462	110	**3,16**	2238	1,8					
	474	107	**6,21**	2467	2,6	**MR272-3E132S/2B**	9,90	75	114	IE3
	557	91	**5,28**	2539	2,1	**NR272-3E132S/2B**		79		
	651	78	**4,53**	2576	2,3	**MR272-2E132S/2A**	10,20	71		IE2
						NR272-2E132S/2A		73		
7,5	3,2	20669	**457,99**	76047	0,9	**MR974-3E132M/4D**	14,40	1168	138	IE3
10	3,8	17616	**390,41**	97327	1,0	**NR974-3E132M/4D**		1218		
	4,3	15549	**344,17**	108424	1,2	**MR974-2E132M/4C**	15,00	1163		IE2
	4,8	13809	**305,33**	116736	1,3	**NR974-2E132M/4C**		1213		
	5,2	13010	**186,95**	120420	1,4	**MR973-3E160M/6**	15,00	1115	137	IE3
	5,8	11616	**166,73**	126036	1,5	**NR973-3E160M/6**		1165		
	6,5	10463	**150,02**	130315	1,7	**MR973-2E160M/6**	15,00	1115		IE2
	7,3	9256	**132,83**	134478	1,9	**NR973-2E160M/6**		1165		
	8,3	8108	**116,17**	138161	2,2					
	9,4	7176	**102,69**	140965	2,5					
	11	6405	**91,56**	142982	2,8					
	12	5757	**82,20**	144783	3,1					
	5,0	13182	**292,15**	71383	1,0	**MR874-3E132M/4D**	14,40	628	135	IE3
	6,1	10823	**239,61**	83659	1,2	**NR874-3E132M/4D**		633		
	6,9	9573	**211,60**	89182	1,4	**MR874-2E132M/4C**	15,00	623		IE2
	7,8	8522	**188,08**	93365	1,5	**NR874-2E132M/4C**		628		
	8,4	7901	**174,68**	95659	1,6					

*: Geared motor prices are different for IE2 and IE3 motors.

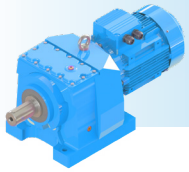

Power P_g [kW] P_g [HP]	IE3 Output Speeds n_2 [r.p.m]	IE3 Output Torque M_2 [Nm]	Ratio i	IE3 Radial Loads (Output) F_{qam} [N]	IE3 Service Factors f_s	Type	Rated Current [A]	Weight ~ [kg]	Dim. Page	* Motor Eff. Class
7,5	8,8	7647	**110,17**	96658	1,7	**MR873-3E160M/6**	15,00	635	134	IE3
10	9,7	6928	**99,81**	99100	1,9	**NR873-3E160M/6**		640		
	11	6004	**86,51**	102028	2,2	**MR873-2E160M/6**	15,00	635		IE2
	13	5241	**75,51**	104284	2,5	**NR873-2E160M/6**		640		
	15	4496	**64,77**	106230	2,9					
	17	3925	**56,54**	107756	3,3					
	8,2	8246	**178,78**	47910	1,0	**MR773-3E132M/4D**	14,40	357	131	IE3
	9,9	6863	**148,73**	52957	1,2	**NR773-3E132M/4D**		443		
	11	6146	**133,05**	55281	1,3	**MR773-2E132M/4C**	15,00	352		IE2
	13	5311	**115,06**	57788	1,5	**NR773-2E132M/4C**		338		
	15	4606	**99,63**	59702	1,7					
	17	4034	**87,13**	61034	2,0					
	19	3561	**76,81**	62131	2,2					
	21	3162	**68,15**	63005	2,5					
	16	4349	**94,17**	26093	1,0	**MR673-3E132M/4D**	14,40	246	128	IE3
	18	3744	**80,96**	29344	1,1	**NR673-3E132M/4D**		257		
	21	3254	**70,26**	30780	1,3	**MR673-2E132M/4C**	15,00	241		IE2
	24	2848	**61,42**	30006	1,5	**NR673-2E132M/4C**		252		
	27	2507	**53,99**	29229	1,7					
	28	2445	**52,68**	29077	1,8					
	32	2106	**45,29**	28127	2,0					
	37	1830	**39,30**	27218	2,2					
	43	1602	**34,36**	26347	2,4					
	49	1410	**30,20**	25510	2,6					
	63	1094	**23,18**	23803	3,4	**MR672-3E132M/4D**	14,40	241	128	IE3
	71	980	**20,74**	23095	3,7	**NR672-3E132M/4D**		251		
						MR672-2E132M/4C	15,00	236		IE2
						NR672-2E132M/4C		246		
	23	3001	**64,72**	19779	1,0	**MR573-3E132M/4D**	14,40	180	125	IE3
	27	2542	**54,74**	21922	1,2	**NR573-3E132M/4D**		173		
	30	2268	**48,74**	21529	1,3	**MR573-2E132M/4C**	15,00	175		IE2
	37	1860	**39,98**	20784	1,5	**NR573-2E132M/4C**		168		
	41	1645	**35,31**	20281	1,7					
	47	1464	**31,38**	19787	1,8					
	54	1273	**27,00**	19138	2,2	**MR572-3E132M/4D**	14,40	173	125	IE3
	64	1087	**23,02**	18436	2,4	**NR572-3E132M/4D**		166		
	76	905	**19,15**	17620	2,8	**MR572-2E132M/4C**	15,00	168		IE2
	86	807	**17,07**	17108	3,0	**NR572-2E132M/4C**		161		
	101	687	**14,54**	16401	3,5					
	117	591	**12,50**	15743	3,9					
	39	1744	**37,45**	10751	0,9	**MR473-3E132M/4D**	14,40	150	122	IE3
	47	1443	**30,93**	10687	1,1	**NR473-3E132M/4D**		153		
	57	1200	**25,67**	10528	1,3	**MR473-2E132M/4C**	15,00	145		IE2
						NR473-2E132M/4C		148		
	66	1045	**22,15**	10350	1,4	**MR472-3E132M/4D**	14,40	143	122	IE3
	78	884	**18,72**	10102	1,6	**NR472-3E132M/4D**		146		
	85	814	**17,25**	9968	1,6	**MR472-2E132M/4C**	15,00	138		IE2
	95	726	**15,35**	9766	1,7	**NR472-2E132M/4C**		141		
	108	641	**13,56**	9537	1,9					
	122	571	**12,05**	9310	2,0					
	136	510	**10,79**	9017	2,2					
	154	451	**9,53**	8774	2,3					

*: Geared motor prices are different for IE2 and IE3 motors.

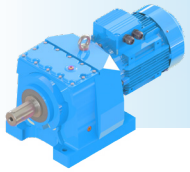

MR/MV/MN/NR/NV/NN - PERFORMANCE TABLES

Power P_g [kW] P_g [HP]	IE3 Output Speeds n_2 [r.p.m]	IE3 Output Torque M_2 [Nm]	Ratio i	IE3 Radial Loads (Output) F_{qam} [N]	IE3 Service Factors f_s	Type	Rated Current [A]	Weight ~ [kg]	Dim. Page	* Motor Eff. Class
7,5	173	401	**8,47**	8540	2,6	**MR472-3E132M/4D**	14,40	143	122	IE3
10	186	372	**7,87**	8391	2,7	**NR472-3E132M/4D**		146		
	220	315	**6,65**	8051	3,1	**MR472-2E132M/4C**	15,00	138		IE2
						NR472-2E132M/4C		141		
	90	767	**16,20**	1533	0,9	**MR372-3E132M/4D**	14,40	104	119	IE3
	108	641	**13,53**	2708	1,0	**NR372-3E132M/4D**		106		
	117	591	**12,48**	3143	1,1	**MR372-2E132M/4C**	15,00	99		IE2
	136	512	**10,80**	3795	1,2	**NR372-2E132M/4C**		101		
	156	447	**9,41**	4287	1,3					
	178	392	**8,25**	4659	1,4					
	214	325	**6,84**	4633	1,7					
	246	284	**5,97**	4879	1,9					
	280	249	**5,23**	5050	2,1					
	313	222	**9,41**	5002	2,1	**MR372-3E132S/2C**	13,20	93	119	IE3
	357	194	**8,25**	4759	2,3	**NR372-3E132S/2C**		95		
	430	161	**6,84**	4479	2,7	**MR372-2E132S/2B**	13,60	88		IE2
	494	141	**5,97**	4254	3,0	**NR372-2E132S/2B**		90		
	563	123	**5,23**	4050	3,2					
	594	117	**4,96**	4018	3,2					
	686	101	**4,29**	3806	3,5					
	788	88	**3,74**	3617	3,7					
	139	500	**10,57**	1307	0,8	**MR282-3E132M/4D**	14,40	96	116	IE3
	152	455	**9,61**	1746	0,9	**NR282-3E132M/4D**		98		
	176	394	**8,33**	2305	1,0	**MR282-2E132M/4C**	15,00	91		IE2
	203	341	**7,21**	2755	1,1	**NR282-2E132M/4C**		93		
	234	296	**6,25**	2308	1,2					
	274	253	**5,35**	2715	1,3					
	317	219	**4,62**	3012	1,3					
	349	199	**4,20**	3163	1,3					
	403	172	**3,64**	3342	1,4					
	465	150	**3,15**	3469	1,5					
	551	126	**5,35**	3542	2,1	**MR282-3E132S/2C**	13,20	95	116	IE3
	638	109	**4,62**	3347	2,1	**NR282-3E132S/2C**		97		
	701	99	**4,20**	3229	2,1	**MR282-2E132S/2B**	13,60	90		IE2
						NR282-2E132S/2B		92		
	144	481	**10,16**	-	0,8	**MR272-3E132M/4D**	14,40	87	114	IE3
	168	412	**8,71**	-	0,9	**NR272-3E132M/4D**		89		
	236	294	**6,21**	-	1,1	**MR272-2E132M/4C**	15,00	82		IE2
	277	250	**5,28**	586	1,1	**NR272-2E132M/4C**		84		
	324	215	**4,53**	1008	1,1					
	397	175	**3,69**	1097	1,2					
	464	150	**3,16**	1389	1,3					
	474	146	**6,21**	1710	1,9	**MR272-3E132S/2C**	13,20	86	114	IE3
	557	125	**5,28**	1896	1,6	**NR272-3E132S/2C**		88		
	651	107	**4,53**	2025	1,7	**MR272-2E132S/2B**	13,60	81		IE2
						NR272-2E132S/2B		83		
11	5,2	19092	**186,95**	88052	0,9	**MR973-3E160L/6**	21,50	1151	137	IE3
15	5,8	17047	**166,73**	100656	1,1	**NR973-3E160L/6**		1201		
	7,3	13584	**132,83**	117951	1,3	**MR973-2E160L/6**	22,00	1151		IE2
						NR973-2E160L/6		1201		

*: Geared motor prices are different for IE2 and IE3 motors.

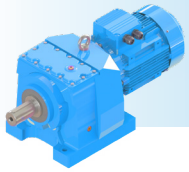

Power P_g [kW] P_g [HP]	IE3 Output Speeds n_2 [r.p.m]	IE3 Output Torque M_2 [Nm]	Ratio i	IE3 Radial Loads (Output) F_{qam} [N]	IE3 Service Factors f_s	Type	Rated Current [A]	Weight ~ [kg]	Dim. Page	* Motor Eff. Class
11	7,9	12639	**186,95**	121960	1,4	**MR973-3E160M/4C**	21,00	1124	137	IE3
15	8,8	11286	**166,73**	127289	1,6	**NR973-3E160M/4C**		1174		
	9,8	10167	**150,02**	131366	1,8	**MR973-2E160M/4B**	21,00	1134		IE2
	11	8994	**132,83**	135325	2,0	**NR973-2E160M/4B**		1184		
	13	7879	**116,17**	138864	2,3					
	14	6974	**102,69**	141553	2,6					
	16	6225	**91,56**	143669	2,9					
	18	5596	**82,20**	145376	3,2					
	8,8	11215	**110,17**	81975	1,2	**MR873-3E160L/6**	21,50	670	134	IE3
	9,7	10160	**99,81**	86825	1,3	**NR873-3E160L/6**		675		
	11	8806	**86,51**	92391	1,5	**MR873-2E160L/6**	22,00	670		IE2
	13	7687	**75,51**	96366	1,7	**NR873-2E160L/6**		675		
	15	6594	**64,77**	100069	2,0					
	13	7400	**110,17**	97507	1,8	**MR873-3E160M/4C**	21,00	661	134	IE3
	15	6705	**99,81**	99712	1,9	**NR873-3E160M/4C**		666		
	17	5811	**86,51**	102735	2,2	**MR873-2E160M/4B**	21,00	671		IE2
	19	5072	**75,51**	104765	2,6	**NR873-2E160M/4B**		676		
	23	4351	**64,77**	106745	3,0					
	26	3798	**56,54**	108184	3,4					
	28	3551	**52,86**	108779	3,7					
	11	8986	**133,05**	44711	0,9	**MR773-3E160M/4C**	21,00	429	131	IE3
	13	7765	**115,06**	49800	1,0	**NR773-3E160M/4C**		521		
	15	6734	**99,63**	53467	1,2	**MR773-2E160M/4B**	21,00	439		IE2
	17	5898	**87,13**	56099	1,4	**NR773-2E160M/4B**		531		
	19	5206	**76,81**	58078	1,5					
	22	4623	**68,15**	59610	1,7					
	24	4127	**60,76**	60845	1,9					
	25	3976	**58,59**	61203	2,0					
	29	3449	**50,75**	62406	2,3					
	33	3005	**44,17**	63359	2,7					
	37	2683	**39,33**	64020	3,0					
	42	2383	**34,89**	64611	3,4					
	47	2127	**31,11**	65098	3,8					
	49	2050	**30,00**	65243	3,9					
	24	4164	**61,42**	27133	1,0	**MR673-3E160M/4C**	21,00	298	128	IE3
	27	3665	**53,99**	26699	1,2	**NR673-3E160M/4C**		311		
	28	3575	**52,68**	26608	1,2	**MR673-2E160M/4B**	21,00	308		IE2
	32	3078	**45,29**	26002	1,4	**NR673-2E160M/4B**		321		
	37	2676	**39,30**	25370	1,5					
	43	2342	**34,36**	24729	1,6					
	49	2062	**30,20**	24085	1,8					
	55	1823	**26,66**	23442	1,9					
	63	1600	**23,18**	22704	2,3	**MR672-3E160M/4C**	21,00	296	128	IE3
	71	1433	**20,74**	22110	2,5	**NR672-3E160M/4C**		306		
	82	1238	**17,93**	21331	2,8	**MR672-2E160M/4B**	21,00	306		IE2
	95	1073	**15,53**	20560	3,1	**NR672-2E160M/4B**		316		
	108	940	**13,58**	19847	3,5					
	123	829	**11,97**	19184	3,8					
	37	2720	**39,98**	18691	1,1	**MR573-3E160M/4C**	21,00	229	125	IE3
	42	2405	**35,31**	18431	1,1	**NR573-3E160M/4C**		221		
	47	2141	**31,38**	18140	1,2	**MR573-2E160M/4B**	21,00	239		IE2
	55	1814	**26,54**	17668	1,4	**NR573-2E160M/4B**		231		

*: Geared motor prices are different for IE2 and IE3 motors.

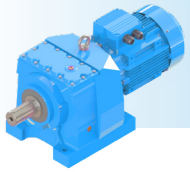

MR/MV/MN/NR/NV/NN - PERFORMANCE TABLES

Power P_g [kW] P_g [HP]	IE3 Output Speeds n_2 [r.p.m]	IE3 Output Torque M_2 [Nm]	Ratio i	IE3 Radial Loads (Output) F_{qam} [N]	IE3 Service Factors f_s	Type	Rated Current [A]	Weight ~ [kg]	Dim. Page	* Motor Eff. Class
11 15	64	1589	**23,02**	17224	1,7	**MR572-3E160M/4C**	21,00	226	125	IE3
	77	1323	**19,15**	16608	1,9	**NR572-3E160M/4C**		218		
	86	1180	**17,07**	16205	2,1	**MR572-2E160M/4B**	21,00	236		IE2
	101	1004	**14,54**	15630	2,4	**NR572-2E160M/4B**		228		
	118	865	**12,50**	15078	2,7					
	136	751	**10,85**	14558	3,0					
	155	658	**9,48**	14065	3,3					
	176	579	**8,34**	13596	3,7					
	198	514	**7,41**	13081	4,0					
	68	1484	**21,74**	8663	1,0	**MR473-3E160M/4C**	21,00	198	122	IE3
	81	1233	**18,04**	8662	1,3	**NR473-3E160M/4C**		200		
						MR473-2E160M/4B	21,00	208		IE2
						NR473-2E160M/4B		210		
	85	1190	**17,25**	8819	1,1	**MR472-3E160M/4C**	21,00	196	122	IE3
	96	1061	**15,35**	8741	1,2	**NR472-3E160M/4C**		198		
	108	938	**13,56**	8631	1,3	**MR472-2E160M/4B**	21,00	206		IE2
	122	834	**12,05**	8504	1,4	**NR472-2E160M/4B**		208		
	136	746	**10,79**	8261	1,5					
	154	660	**9,53**	8105	1,6					
	174	587	**8,47**	7944	1,7					
	187	544	**7,87**	7838	1,9					
	221	460	**6,65**	7582	2,1					
	260	393	**5,66**	7327	2,4					
	301	340	**4,89**	6966	2,4					
	324	315	**4,54**	6853	2,3					
	383	266	**3,83**	6589	2,4					
	450	238	**3,27**	6404	2,5					
15 20	7,3	18431	**132,83**	92255	1,0	**MR973-3E180L/6**	29,00	1227	137	IE3
						NR973-3E180L/6		1277		
						MR973-2E180L/6	29,00	1207		IE2
						NR973-2E180L/6		1257		
	7,9	17238	**186,95**	99559	1,0	**MR973-3E160L/4D**	29,00	1160	137	IE3
	8,8	15393	**166,73**	109734	1,2	**NR973-3E160L/4D**		1210		
	9,8	13866	**150,02**	116899	1,3	**MR973-2E160L/4C**	29,30	1157		IE2
	11	12267	**132,83**	123637	1,5	**NR973-2E160L/4C**		1207		
	13	10746	**116,17**	129424	1,7					
	14	9512	**102,69**	133728	1,9					
	16	8491	**91,56**	136978	2,1					
	18	7632	**82,20**	139612	2,4					
	21	6508	**70,07**	142944	2,8					
	24	5745	**61,77**	145030	3,1					
	27	5103	**54,80**	146712	3,5					
	8,9	15215	**110,17**	57310	0,9	**MR873-3E180L/6**	29,00	695	134	IE3
	9,8	13784	**99,81**	67627	0,9	**NR873-3E180L/6**		700		
	11	11947	**86,51**	78415	1,1	**MR873-2E180L/6**	29,00	675		IE2
	13	10429	**75,51**	85637	1,2	**NR873-2E180L/6**		680		
	13	10091	**110,17**	87265	1,3	**MR873-3E160L/4D**	29,00	635	134	IE3
	15	9143	**99,81**	91189	1,4	**NR873-3E160L/4D**		640		
	17	7924	**86,51**	95767	1,6	**MR873-2E160L/4C**	29,30	632		IE2
	19	6917	**75,51**	99209	1,9	**NR873-2E160L/4C**		637		
	23	5933	**64,77**	102335	2,2					
	26	5179	**56,54**	104512	2,5					
	28	4842	**52,86**	105493	2,7					
	32	4224	**46,12**	107118	3,1					

*: Geared motor prices are different for IE2 and IE3 motors.

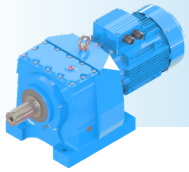

Power P_g [kW] P_g [HP]	IE3 Output Speeds n_2 [r.p.m]	IE3 Output Torque M_2 [Nm]	Ratio i	IE3 Radial Loads (Output) F_{qam} [N]	IE3 Service Factors f_s	Type	Rated Current [A]	Weight ~ [kg]	Dim. Page	* Motor Eff. Class
15 20	36	3714	**40,55**	108429	3,5	**MR873-3E160L/4D** **NR873-3E160L/4D** **MR873-2E160L/4C** **NR873-2E160L/4C**	29,00 29,30	635 640 632 637	134	IE3 IE2
	15 17 19 22 24 25 29 33 37 42 47 49 57 65	9184 8044 7100 6306 5629 5423 4704 4099 3659 3251 2902 2796 2425 2114	**99,63** **87,13** **76,81** **68,15** **60,76** **58,59** **50,75** **44,17** **39,33** **34,89** **31,11** **30,00** **25,99** **22,62**	43792 48824 52306 54916 56964 57526 59383 60911 61963 62863 63595 63811 64545 65137	0,9 1,0 1,1 1,3 1,4 1,5 1,7 2,0 2,2 2,5 2,8 2,9 3,3 3,8	**MR773-3E160L/4D** **NR773-3E160L/4D** **MR773-2E160L/4C** **NR773-2E160L/4C**	29,00 29,30	426 510 423 507	131	IE3 IE2
	69	2015	**21,40**	65319	4,0	**MR772-3E160L/4D** **NR772-3E160L/4D** **MR772-2E160L/4C** **NR772-2E160L/4C**	29,00 29,30	396 480 393 477	131	IE3 IE2
	32 37 43 49 55	4199 3649 3195 2812 2486	**45,29** **39,30** **34,36** **30,20** **26,66**	23597 23284 22905 22481 22027	1,0 1,1 1,2 1,3 1,4	**MR673-3E160L/4D** **NR673-3E160L/4D** **MR673-2E160L/4C** **NR673-2E160L/4C**	29,00 29,30	325 337 322 334	128	IE3 IE2
	63 71 82 95 108 123 138 155 161 186	2182 1954 1688 1464 1282 1131 1005 896 864 749	**23,18** **20,74** **17,93** **15,53** **13,58** **11,97** **10,62** **9,47** **9,13** **7,91**	21474 21009 20379 19736 19126 18548 17998 17473 17307 16656	1,7 1,8 2,1 2,3 2,5 2,8 3,1 3,4 3,5 3,9	**MR672-3E160L/4D** **NR672-3E160L/4D** **MR672-2E160L/4C** **NR672-2E160L/4C**	29,00 29,30	320 332 317 329	128	IE3 IE2
	47 55	2920 2474	**31,38** **26,54**	16274 16090	0,9 1,0	**MR573-3E160L/4D** **NR573-3E160L/4D** **MR573-2E160L/4C** **NR573-2E160L/4C**	29,00 29,30	271 262 268 259	125	IE3 IE2
	64 77 86 101 118 136 155 176 198 228 261 297 337	2168 1804 1610 1370 1179 1025 897 789 702 610 534 469 415	**23,02** **19,15** **17,07** **14,54** **12,50** **10,85** **9,48** **8,34** **7,41** **6,43** **5,63** **4,95** **4,37**	15855 15470 15190 14765 14335 13913 13501 13101 12607 12178 11771 11383 11010	1,2 1,4 1,5 1,7 2,0 2,2 2,5 2,7 3,1 3,4 3,7 4,0 4,0	**MR572-3E160L/4D** **NR572-3E160L/4D** **MR572-2E160L/4C** **NR572-2E160L/4C**	29,00 29,30	265 257 262 254	125	IE3 IE2

*: Geared motor prices are different for IE2 and IE3 motors.

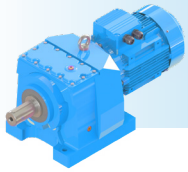

MR/MV/MN/NR/NV/NN - PERFORMANCE TABLES

Power P_g [kW] P_g [HP]	IE3 Output Speeds n_2 [r.p.m]	IE3 Output Torque M_2 [Nm]	Ratio i	IE3 Radial Loads (Output) F_{qam} [N]	IE3 Service Factors f_s	Type	Rated Current [A]	Weight ~ [kg]	Dim. Page	* Motor Eff. Class
15 20	81	1681	**18,04**	7230	0,9	**MR473-3E160L/4D** **NR473-3E160L/4D** **MR473-2E160L/4C** **NR473-2E160L/4C**	29,00 29,30	222 225 219 222	122	
	85	1624	**17,25**	7511	0,8	**MR472-3E160L/4D**	29,00	220	122	
	96	1447	**15,35**	7577	0,9	**NR472-3E160L/4D**		223		
	108	1279	**13,56**	7603	0,9	**MR472-2E160L/4C**	29,30	217		
	122	1138	**12,05**	7590	1,0	**NR472-2E160L/4C**		220		
	136	1018	**10,79**	7404	1,1					
	154	900	**9,53**	7349	1,2					
	174	801	**8,47**	7272	1,3					
	187	742	**7,87**	7213	1,4					
	221	628	**6,65**	7055	1,6					
	260	536	**5,66**	6877	1,7					
	301	463	**4,89**	6535	1,7					
	324	430	**4,54**	6452	1,7					
	383	364	**3,83**	6250	1,8					
	450	310	**3,27**	6047	1,9					
18,5 25	8,8	18921	**166,73**	89083	1,0	**MR973-3E180M/4C**	34,50	1187	137	IE3
	9,8	17045	**150,02**	100675	1,1	**NR973-3E180M/4C**		1237		
	11	15079	**132,83**	111022	1,2	**MR973-2E180M/4B**	34,50	1187		IE2
	13	13209	**116,17**	119563	1,4	**NR973-2E180M/4B**		1237		
	14	11692	**102,69**	125735	1,5					
	16	10437	**91,56**	130404	1,7					
	18	9382	**82,20**	134057	1,9					
	21	8000	**70,07**	138616	2,3					
	24	7062	**61,77**	141298	2,5					
	27	6272	**54,80**	143539	2,9					
	30	5599	**48,86**	145367	3,2					
	35	4852	**42,30**	147309	3,7					
	13	12862	**75,51**	73297	1,0	**MR873-3G200L/6a**	36,50	725	134	IE3
	15	11033	**64,77**	82825	1,2	**NR873-3G200L/6a**		730		
						MR873-2G200L/6a	36,50	725		IE2
						NR873-2G200L/6a		730		
	17	9740	**86,51**	88619	1,3	**MR873-3E180M/4C**	34,50	687	134	IE3
	20	8502	**75,51**	93547	1,5	**NR873-3E180M/4C**		692		
	23	7293	**64,77**	97873	1,8	**MR873-2E180M/4B**	34,50	687		IE2
	26	6366	**56,54**	100811	2,0	**NR873-2E180M/4B**		692		
	28	5951	**52,86**	102270	2,2					
	32	5192	**46,12**	104425	2,5					
	36	4565	**40,55**	106169	2,8					
	19	8727	**76,81**	45867	0,9	**MR773-3E180M/4C**	34,50	450	131	IE3
	22	7751	**68,15**	49852	1,0	**NR773-3E180M/4C**		542		
	24	6919	**60,76**	52845	1,2	**MR773-2E180M/4B**	34,50	450		IE2
	25	6666	**58,59**	53691	1,2	**NR773-2E180M/4B**		542		
	29	5782	**50,75**	56440	1,4					
	33	5039	**44,17**	58529	1,6					
	38	4498	**39,33**	59872	1,8					
	42	3996	**34,89**	61193	2,0					
	47	3567	**31,11**	62143	2,2					
	49	3437	**30,00**	62433	2,3					
	57	2981	**25,99**	63409	2,7					
	65	2598	**22,62**	64190	3,1					

*: Geared motor prices are different for IE2 and IE3 motors.

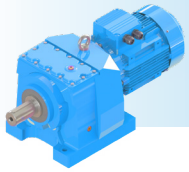

Power P_g [kW] P_g [HP]	IE3 Output Speeds n_2 [r.p.m]	IE3 Output Torque M_2 [Nm]	Ratio i	IE3 Radial Loads (Output) F_{qam} [N]	IE3 Service Factors f_s	Type	Rated Current [A]	Weight ~ [kg]	Dim. Page	* Motor Eff. Class
18,5	69	2477	**21,40**	64428	3,2	**MR772-3E180M/4C**	34,50	445	131	IE3
25	79	2160	**18,63**	65037	3,7	**NR772-3E180M/4C**		537		
						MR772-2E180M/4B	34,50	445		IE2
						NR772-2E180M/4B		537		
	38	4486	**39,30**	21455	0,9	**MR673-3E180M/4C**	34,50	341	128	IE3
	43	3927	**34,36**	21304	1,0	**NR673-3E180M/4C**		355		
	49	3457	**30,20**	21071	1,1	**MR673-2E180M/4B**	34,50	341		IE2
	55	3056	**26,66**	20779	1,2	**NR673-2E180M/4B**		355		
	64	2682	**23,18**	20387	1,4	**MR672-3E180M/4C**	34,50	338	128	IE3
	71	2402	**20,74**	20035	1,5	**NR672-3E180M/4C**		349		
	82	2075	**17,93**	19534	1,7	**MR672-2E180M/4B**	34,50	338		IE2
	95	1799	**15,53**	19001	1,9	**NR672-2E180M/4B**		349		
	109	1576	**13,58**	18482	2,1					
	123	1391	**11,97**	17978	2,3					
	139	1235	**10,62**	17491	2,5					
	156	1102	**9,47**	17019	2,7					
	162	1062	**9,13**	16868	2,8					
	186	921	**7,91**	16274	3,2					
	214	802	**6,88**	15701	3,6					
	257	668	**5,73**	14781	4,0					
	77	2218	**19,15**	14469	1,1	**MR572-3E180M/4C**	34,50	289	125	IE3
	86	1979	**17,07**	14297	1,2	**NR572-3E180M/4C**		277		
	101	1684	**14,54**	14002	1,4	**MR572-2E180M/4B**	34,50	289		IE2
	118	1450	**12,50**	13677	1,6	**NR572-2E180M/4B**		277		
	136	1260	**10,85**	13341	1,8					
	156	1103	**9,48**	12999	2,0					
	177	970	**8,34**	12658	2,2					
	199	862	**7,41**	12183	2,5					
	229	749	**6,43**	11809	2,8					
	262	656	**5,63**	11447	3,0					
	298	577	**4,95**	11096	3,3					
	338	510	**4,37**	10756	3,6					
	109	1573	**13,56**	6706	0,8	**MR472-3E180M/4C**	34,50	269	122	IE3
	122	1399	**12,05**	6792	0,8	**NR472-3E180M/4C**		272		
	137	1251	**10,79**	6656	0,9	**MR472-2E180M/4B**	34,50	269		IE2
	155	1106	**9,53**	6687	0,9	**NR472-2E180M/4B**		272		
	174	984	**8,47**	6683	1,0					
	188	912	**7,87**	6666	1,1					
	222	772	**6,65**	6591	1,3					
	261	658	**5,66**	6481	1,4					
	302	570	**4,89**	6155	1,4					
	325	528	**4,54**	6098	1,3					
	385	447	**3,83**	5951	1,5					
	452	381	**3,27**	5791	1,5					
22	11	17933	**132,83**	95428	1,0	**MR973-3E180L/4D**	42,50	1212	137	IE3
30	13	15709	**116,17**	107874	1,1	**NR973-3E180L/4D**		1262		
	14	13905	**102,69**	116512	1,3	**MR973-2E180L/4C**	42,50	1212		IE2
	16	12413	**91,56**	122880	1,5	**NR973-2E180L/4C**		1262		
	18	11157	**82,20**	127771	1,6					
	21	9514	**70,07**	133612	1,9					
	24	8398	**61,77**	137204	2,1					
	27	7460	**54,80**	140128	2,4					
	30	6659	**48,86**	142455	2,7					
	35	5771	**42,30**	144908	3,1					
	40	5094	**37,29**	146689	3,5					

*: Geared motor prices are different for IE2 and IE3 motors.

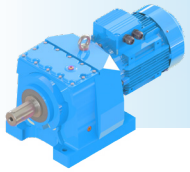

MR/MV/MN/NR/NV/NN - PERFORMANCE TABLES

Power P_g [kW] P_g [HP]	IE3 Output Speeds n_2 [r.p.m]	IE3 Output Torque M_2 [Nm]	Ratio i	IE3 Radial Loads (Output) F_{qam} [N]	IE3 Service Factors f_s	Type	Rated Current [A]	Weight ~ [kg]	Dim. Page	* Motor Eff. Class
22	13	15296	**75,51**	56641	0,8	**MR873-3G200L/6b**	43,00	740	134	IE3
30	15	13120	**64,77**	71797	1,0	**NR873-3G200L/6b**		745		
						MR873-2G200L/6b	43,00	740		IE2
						NR873-2G200L/6b		745		
	17	11583	**86,51**	80155	1,1	**MR873-3E180L/4D**	42,50	687	134	IE3
	20	10111	**75,51**	87034	1,3	**NR873-3E180L/4D**		692		
	23	8673	**64,77**	92898	1,5	**MR873-2E180L/4C**	42,50	687		IE2
	26	7571	**56,54**	96919	1,7	**NR873-2E180L/4C**		692		
	28	7077	**52,86**	98601	1,8					
	32	6175	**46,12**	101504	2,1					
	36	5429	**40,55**	103743	2,4					
	24	8228	**60,76**	47975	1,0	**MR773-3E180L/4D**	42,50	489	131	IE3
	25	7928	**58,59**	49172	1,0	**NR773-3E180L/4D**		587		
	29	6877	**50,75**	52987	1,2	**MR773-2E180L/4C**	42,50	489		IE2
	33	5993	**44,17**	55813	1,3	**NR773-2E180L/4C**		587		
	38	5350	**39,33**	57678	1,5					
	42	4752	**34,89**	59285	1,7					
	47	4242	**31,11**	60614	1,9					
	49	4087	**30,00**	61022	2,0					
	57	3546	**25,99**	62191	2,3					
	65	3090	**22,62**	63181	2,6					
	69	2946	**21,40**	63482	2,7	**MR772-3E180L/4D**	42,50	457	131	IE3
	79	2569	**18,63**	64248	3,1	**NR772-3E180L/4D**		557		
	90	2262	**16,39**	65386	3,4	**MR772-2E180L/4C**	42,50	457		IE2
	101	2009	**14,54**	66349	3,7	**NR772-2E180L/4C**		557		
	49	4111	**30,20**	19673	0,9	**MR673-3E180L/4D**	42,50	370	128	IE3
	55	3634	**26,66**	19544	1,0	**NR673-3E180L/4D**		384		
						MR673-2E180L/4C	42,50	370		IE2
						NR673-2E180L/4C		384		
	64	3190	**23,18**	19314	1,2	**MR672-3E180L/4D**	42,50	345	128	IE3
	71	2857	**20,74**	19075	1,3	**NR672-3E180L/4D**		349		
	82	2468	**17,93**	18704	1,4	**MR672-2E180L/4C**	42,50	345		IE2
	95	2140	**15,53**	18283	1,6	**NR672-2E180L/4C**		349		
	109	1874	**13,58**	17853	1,7					
	123	1654	**11,97**	17424	1,9					
	139	1469	**10,62**	16999	2,1					
	156	1311	**9,47**	16580	2,3					
	162	1263	**9,13**	16446	2,4					
	186	1095	**7,91**	15908	2,7					
	214	954	**6,88**	15383	3,0					
	257	795	**5,73**	14484	4,0					
	290	706	**5,08**	14055	4,0					
	325	630	**4,53**	13645	4,0					
	338	607	**4,37**	13516	4,0					
	390	526	**3,79**	13008	4,0					
	77	2638	**19,15**	13476	1,0	**MR572-3E180L/4D**	42,50	311	125	IE3
	86	2353	**17,07**	13412	1,0	**NR572-3E180L/4D**		298		
	101	2003	**14,54**	13249	1,2	**MR572-2E180L/4C**	42,50	311		IE2
	118	1724	**12,50**	13029	1,3	**NR572-2E180L/4C**		298		
	136	1498	**10,85**	12778	1,5					
	156	1311	**9,48**	12508	1,7					
	177	1154	**8,34**	12226	1,9					
	199	1026	**7,41**	11769	2,1					
	229	891	**6,43**	11450	2,3					

*: Geared motor prices are different for IE2 and IE3 motors.

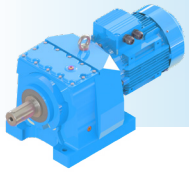

Power P_g [kW] P_g [HP]	IE3 Output Speeds n_2 [r.p.m]	IE3 Output Torque M_2 [Nm]	Ratio i	IE3 Radial Loads (Output) F_{qam} [N]	IE3 Service Factors f_s	Type	Rated Current [A]	Weight ~ [kg]	Dim. Page	* Motor Eff. Class
22	262	780	**5,63**	11133	2,5	**MR572-3E180L/4D**	42,50	311	125	IE3
30	298	686	**4,95**	10820	2,8	**NR572-3E180L/4D**		298		
	338	607	**4,37**	10513	3,0	**MR572-2E180L/4C**	42,50	311		IE2
						NR572-2E180L/4C		298		
	155	1316	**9,53**	6027	0,8	**MR472-3E180L/4D**	42,50	269	122	IE3
	174	1170	**8,47**	6096	0,9	**NR472-3E180L/4D**		271		
	188	1085	**7,87**	6121	0,9	**MR472-2E180L/4C**	42,50	269		IE2
	222	918	**6,65**	6131	1,1	**NR472-2E180L/4C**		271		
	261	783	**5,66**	6089	1,2					
	302	678	**4,89**	5778	1,2					
	325	628	**4,54**	5749	1,1					
	385	532	**3,83**	5655	1,2					
	452	453	**3,27**	5539	1,3					
30	14	18963	**102,69**	88796	0,9	**MR973-3G200L/4**	55,00	1271	137	IE3
40	16	16928	**91,56**	101334	1,1	**NR973-3G200L/4**		1321		
	18	15216	**82,20**	110352	1,2	**MR973-2G200L/4**	55,00	1258		IE2
	21	12975	**70,07**	120559	1,4	**NR973-2G200L/4**		1308		
	24	11453	**61,77**	126654	1,6					
	27	10173	**54,80**	131340	1,8					
	30	9081	**48,86**	135053	2,0					
	35	7870	**42,30**	138982	2,3					
	40	6948	**37,29**	141629	2,6					
	45	6172	**33,08**	143817	2,9					
	50	5509	**29,49**	145605	3,3					
	20	13787	**75,51**	67641	0,9	**MR873-3G200L/4**	55,00	777	134	IE3
	23	11826	**64,77**	78916	1,1	**NR873-3G200L/4**		782		
	26	10323	**56,54**	86098	1,3	**MR873-2G200L/4**	55,00	764		IE2
	28	9651	**52,86**	88992	1,3	**NR873-2G200L/4**		769		
	32	8420	**46,12**	93855	1,5					
	36	7403	**40,55**	97498	1,8					
	43	6305	**34,53**	101037	2,1					
	49	5543	**30,36**	103477	2,3					
	54	5002	**27,39**	104965	2,6					
	62	4359	**23,87**	106724	3,0					
	73	3702	**20,28**	107951	3,5					
	83	3255	**17,83**	105255	4,0					
	92	2937	**16,09**	103054	4,0					
	105	2559	**14,02**	100062	4,0					
	38	7296	**39,33**	51530	1,1	**MR773-3G200L/4**	55,00	528	131	IE3
	42	6481	**34,89**	54292	1,2	**NR773-3G200L/4**		631		
	47	5785	**31,11**	56432	1,4	**MR773-2G200L/4**	55,00	515		IE2
	49	5574	**30,00**	57045	1,4	**NR773-2G200L/4**		618		
	57	4836	**25,99**	58976	1,7					
	65	4214	**22,62**	60692	1,9					
	69	4018	**21,40**	61103	2,0	**MR772-3G200L/4**	55,00	496	131	IE3
	79	3503	**18,63**	62280	2,3	**NR772-3G200L/4**		601		
	90	3085	**16,39**	63789	2,5	**MR772-2G200L/4**	55,00	483		IE2
	101	2739	**14,54**	65036	2,7	**NR772-2G200L/4**		588		
	114	2449	**12,98**	66035	2,9					
	127	2200	**11,65**	66899	3,1					
	134	2076	**11,00**	67301	3,3					
	153	1817	**9,62**	68157	3,6					

*: Geared motor prices are different for IE2 and IE3 motors.

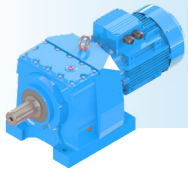

MR/MV/MN/NR/NV/NN - PERFORMANCE TABLES

Power P_g [kW] P_g [HP]	IE3 Output Speeds n_2 [r.p.m]	IE3 Output Torque M_2 [Nm]	Ratio i	IE3 Radial Loads (Output) F_{qam} [N]	IE3 Service Factors f_s	Type	Rated Current [A]	Weight ~ [kg]	Dim. Page	* Motor Eff. Class
30 40	82	3366	**17,93**	16806	1,0	**MR672-3G200L/4**	55,00	417	128	IE3
	95	2919	**15,53**	16639	1,1	**NR672-3G200L/4**		411		
	109	2556	**13,58**	16416	1,3	**MR672-2G200L/4**	55,00	404		IE2
	123	2256	**11,97**	16157	1,4	**NR672-2G200L/4**		398		
	139	2003	**10,62**	15875	1,5					
	156	1788	**9,47**	15578	1,7					
	162	1722	**9,13**	15479	1,7					
	186	1493	**7,91**	15071	2,0					
	214	1301	**6,88**	14654	2,2					
	257	1084	**5,73**	13804	2,9					
	290	963	**5,08**	13452	3,0					
	325	859	**4,53**	13107	3,1					
	338	828	**4,37**	12997	3,2					
	390	718	**3,79**	12559	3,3					
	448	625	**3,29**	12133	3,4					
	101	2731	**14,54**	11526	0,9	**MR572-3G200L/4**	55,00	335	125	IE3
	118	2352	**12,50**	11548	1,0	**NR572-3G200L/4**		322		
	136	2043	**10,85**	11493	1,1	**MR572-2G200L/4**	55,00	322		IE2
	156	1788	**9,48**	11384	1,2	**NR572-2G200L/4**		309		
	177	1574	**8,34**	11238	1,4					
	199	1399	**7,41**	10823	1,6					
	229	1216	**6,43**	10629	1,7					
	262	1064	**5,63**	10415	1,9					
	298	936	**4,95**	10190	2,0					
	338	827	**4,37**	9956	2,2					
37 50	18	18767	**82,20**	90116	1,0	**MR973-3G225S/4**	67,00	1295	137	IE3
	21	16003	**70,07**	106356	1,1	**NR973-3G225S/4**		1345		
	24	14127	**61,77**	115513	1,3	**MR973-2G225S/4**	67,00	1279		IE2
	27	12548	**54,80**	122331	1,4	**NR973-2G225S/4**		1329		
	30	11201	**48,86**	127606	1,6					
	35	9707	**42,30**	132957	1,9					
	40	8569	**37,29**	136744	2,1					
	45	7612	**33,08**	139875	2,4					
	50	6795	**29,49**	142067	2,6					
	57	5993	**26,03**	144306	3,0					
	64	5291	**22,95**	146178	3,4					
	32	10385	**46,12**	85826	1,3	**MR873-3G225S/4**	67,00	855	134	IE3
	36	9131	**40,55**	91113	1,4	**NR873-3G225S/4**		860		
	43	7776	**34,53**	96200	1,7	**MR873-2G225S/4**	67,00	839		IE2
	49	6837	**30,36**	99396	1,9	**NR873-2G225S/4**		844		
	54	6169	**27,39**	101500	2,1					
	62	5376	**23,87**	104015	2,4					
	73	4566	**20,28**	104029	2,8					
	83	4014	**17,83**	101807	3,2					
	92	3622	**16,09**	99942	3,6					
	105	3157	**14,02**	97350	4,0					
	111	2995	**13,30**	102064	4,0					
	42	7993	**34,89**	48915	1,0	**MR773-3G225S/4**	67,00	619	131	IE3
	47	7136	**31,11**	52098	1,1	**NR773-3G225S/4**		730		
	49	6875	**30,00**	52994	1,2	**MR773-2G225S/4**	67,00	603		IE2
	57	5964	**25,99**	55899	1,3	**NR773-2G225S/4**		714		
	65	5198	**22,62**	58099	1,5					
	76	4486	**19,52**	60422	1,7					
	85	4004	**17,40**	62238	1,9					

*: Geared motor prices are different for IE2 and IE3 motors.

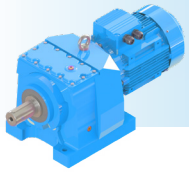

Power P_g [kW] P_g [HP]	IE3 Output Speeds n_2 [r.p.m]	IE3 Output Torque M_2 [Nm]	Ratio i	IE3 Radial Loads (Output) F_{qam} [N]	IE3 Service Factors f_s	Type	Rated Current [A]	Weight ~ [kg]	Dim. Page	* Motor Eff. Class
37 50	101	3379	**14,54**	63785	2,2	**MR772-3G225S/4**	67,00	610	131	IE3
	114	3020	**12,98**	65037	2,4	**NR772-3G225S/4**		720		
	127	2714	**11,65**	66028	2,5	**MR772-2G225S/4**	67,00	594		IE2
	134	2560	**11,00**	66517	2,6	**NR772-2G225S/4**		704		
	153	2241	**9,62**	67520	2,9					
	174	1972	**8,46**	66564	3,1					
	203	1695	**7,26**	63620	2,8					
	226	1523	**6,52**	61453	2,9					
	123	2782	**11,97**	15049	1,1	**MR672-3G225S/4**	67,00	495	128	IE3
	139	2471	**10,62**	14892	1,3	**NR672-3G225S/4**		511		
	156	2205	**9,47**	14701	1,4	**MR672-2G225S/4**	67,00	479		IE2
	162	2124	**9,13**	14634	1,4	**NR672-2G225S/4**		495		
	186	1842	**7,91**	14339	1,6					
	214	1605	**6,88**	14017	1,8					
	257	1337	**5,73**	13209	2,4					
	290	1187	**5,08**	12924	2,5					
	325	1060	**4,53**	12637	2,5					
	338	1021	**4,37**	12543	2,6					
	390	885	**3,79**	12166	2,7					
	448	771	**3,29**	11791	2,8					
45 60	24	17182	**61,77**	99890	1,0	**MR973-3G225M/4**	80,00	1264	137	IE3
	27	15262	**54,80**	110125	1,2	**NR973-3G225M/4**		1314		
	30	13623	**48,86**	117766	1,3	**MR973-2G225M/4**	80,00	1264		IE2
	35	11806	**42,30**	125294	1,5	**NR973-2G225M/4**		1314		
	40	10423	**37,29**	130457	1,7					
	45	9258	**33,08**	134468	1,9					
	50	8265	**29,49**	137659	2,2					
	57	7290	**26,03**	140631	2,5					
	64	6436	**22,95**	143083	2,8					
	72	5717	**20,36**	144221	3,1					
	81	5104	**18,15**	140115	3,5					
	32	12630	**46,12**	74597	1,0	**MR873-3G225M/4**	80,00	875	134	IE3
	36	11105	**40,55**	82498	1,2	**NR873-3G225M/4**		879		
	43	9457	**34,53**	89792	1,4	**MR873-2G225M/4**	80,00	875		IE2
	49	8315	**30,36**	94247	1,6	**NR873-2G225M/4**		879		
	54	7503	**27,39**	97155	1,7					
	62	6538	**23,87**	100203	2,0					
	73	5553	**20,28**	99546	2,3					
	83	4882	**17,83**	97866	2,7					
	92	4405	**16,09**	96386	3,0					
	105	3839	**14,02**	94251	3,4					
	111	3642	**13,30**	100362	3,6					
	127	3174	**11,59**	97147	4,0					
	146	2822	**10,09**	95212	4,0	**MR872-3G225M/4**	80,00	871	134	IE3
	166	2481	**8,87**	92101	4,0	**NR872-3G225M/4**		875		
	195	2113	**7,55**	83381	4,0	**MR872-2G225M/4**	80,00	871		IE2
	222	1858	**6,64**	81001	4,0	**NR872-2G225M/4**		875		
	246	1676	**5,99**	79097	4,0					
	282	1461	**5,22**	76555	4,0					
	298	1386	**4,95**	78185	4,0					
	342	1208	**4,32**	75338	4,0					
	57	7254	**25,99**	51679	1,1	**MR773-3G225M/4**	80,00	631	131	IE3
	65	6322	**22,62**	54798	1,3	**NR773-3G225M/4**		741		
	76	5456	**19,52**	57912	1,4	**MR773-2G225M/4**	80,00	631		IE2
	85	4871	**17,40**	60147	1,5	**NR773-2G225M/4**		741		

*: Geared motor prices are different for IE2 and IE3 motors.

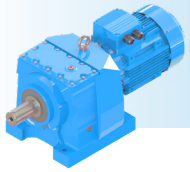

MR/MV/MN/NR/NV/NN - PERFORMANCE TABLES

Power P_g [kW] P_g [HP]	IE3 Output Speeds n_2 [r.p.m]	IE3 Output Torque M_2 [Nm]	Ratio i	IE3 Radial Loads (Output) F_{qam} [N]	IE3 Service Factors f_s	Type	Rated Current [A]	Weight ~ [kg]	Dim. Page	* Motor Eff. Class
45 60	101	4110	**14,54**	62270	1,8	**MR772-3G225M/4**	80,00	621	131	IE3
	114	3673	**12,98**	63756	1,9	**NR772-3G225M/4**		731		
	127	3301	**11,65**	64959	2,1	**MR772-2G225M/4**	80,00	621		IE2
	134	3114	**11,00**	65547	2,2	**NR772-2G225M/4**		731		
	153	2725	**9,62**	66742	2,4					
	174	2398	**8,46**	66950	2,6					
	203	2062	**7,26**	64002	2,3					
	226	1853	**6,52**	61796	2,4					
	240	1748	**6,15**	60656	2,5					
	123	3384	**11,97**	13782	0,9	**MR672-3G225M/4**	80,00	511	128	IE3
	139	3005	**10,62**	13768	1,0	**NR672-3G225M/4**		526		
	156	2682	**9,47**	13699	1,1	**MR672-2G225M/4**	80,00	511		IE2
	162	2584	**9,13**	13668	1,2	**NR672-2G225M/4**		526		
	186	2241	**7,91**	13502	1,3					
	214	1952	**6,88**	13289	1,5					
	257	1626	**5,73**	12529	1,9					
	290	1444	**5,08**	12321	2,0					
	325	1289	**4,53**	12099	2,1					
	338	1242	**4,37**	12025	2,2					
	390	1077	**3,79**	11717	2,2					
	448	938	**3,29**	11400	2,3					
55 75	27	18591	**54,80**	91281	1,0	**MR973-3G250M/4**	96,00	1470	137	IE3
	30	16595	**48,86**	103185	1,1	**NR973-3G250M/4**		1520		
	35	14382	**42,30**	114338	1,3	**MR973-2G250M/4**	96,00	1470		IE2
	40	12696	**37,29**	121719	1,4	**NR973-2G250M/4**		1520		
	45	11278	**33,08**	127317	1,6					
	50	10068	**29,49**	131709	1,8					
	57	8880	**26,03**	135710	2,0					
	64	7840	**22,95**	138999	2,3					
	73	6964	**20,36**	141581	2,6					
	82	6217	**18,15**	137811	2,9					
	91	5604	**16,23**	135067	3,2	**MR972-3G250M/4**	96,00	1430	137	IE3
	103	4978	**14,40**	131013	3,6	**NR972-3G250M/4**		1480		
						MR972-2G250M/4	96,00	1430		IE2
						NR972-2G250M/4		1480		
	43	11520	**34,53**	80469	1,1	**MR873-3G250M/4**	96,00	935	134	IE3
	49	10128	**30,36**	86955	1,3	**NR873-3G250M/4**		940		
	54	9139	**27,39**	91078	1,4	**MR873-2G250M/4**	96,00	935		IE2
	62	7964	**23,87**	94730	1,6	**NR873-2G250M/4**		940		
	73	6764	**20,28**	93920	1,9					
	83	5947	**17,83**	92909	2,2					
	92	5366	**16,09**	91905	2,4					
	106	4676	**14,02**	90336	2,8					
	111	4436	**13,30**	98164	2,9					
	128	3866	**11,59**	95221	3,3					
	147	3437	**10,09**	93806	3,3	**MR872-3G250M/4**	96,00	930	134	IE3
	167	3022	**8,87**	90856	3,7	**NR872-3G250M/4**		935		
	196	2574	**7,55**	81238	4,0	**MR872-2G250M/4**	96,00	930		IE2
	223	2263	**6,64**	79109	4,0	**NR872-2G250M/4**		935		
	247	2042	**5,99**	77384	4,0					
	283	1779	**5,22**	75055	4,0					
	299	1688	**4,95**	77325	4,0					
	343	1471	**4,32**	74581	4,0					

*: Geared motor prices are different for IE2 and IE3 motors.

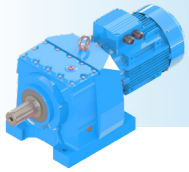

Power P_g [kW] P_g [HP]	IE3 Output Speeds n_2 [r.p.m]	IE3 Output Torque M_2 [Nm]	Ratio i	IE3 Radial Loads (Output) F_{qam} [N]	IE3 Service Factors f_s	Type	Rated Current [A]	Weight ~ [kg]	Dim. Page	* Motor Eff. Class
55 75	65	7701	**22,62**	50040	1,0	**MR773-3G250M/4**	96,00	652	131	IE3
	76	6646	**19,52**	54372	1,2	**NR773-3G250M/4**		780		
	85	5933	**17,40**	57388	1,3	**MR773-2G250M/4**	96,00	652		IE2
						NR773-2G250M/4		780		
	102	5006	**14,54**	60112	1,5	**MR772-3G250M/4**	96,00	622	131	IE3
	114	4475	**12,98**	61998	1,6	**NR772-3G250M/4**		750		
	127	4021	**11,65**	63534	1,7	**MR772-2G250M/4**	96,00	622		IE2
	134	3794	**11,00**	64258	1,8	**NR772-2G250M/4**		750		
	154	3320	**9,62**	65717	1,9					
	175	2922	**8,46**	66864	2,1					
	204	2512	**7,26**	64406	1,9					
	227	2257	**6,52**	62155	2,0					
	240	2129	**6,15**	60992	2,0					
75 97	40	17256	**37,29**	99467	1,0	**MR973-3G280S/4**	133,0	1637	137	IE3
	45	15328	**33,08**	109791	1,2	**NR973-3G280S/4**		1687		
	50	13684	**29,49**	117497	1,3	**MR973-2G280S/4**	133,0	1637		IE2
	57	12069	**26,03**	124256	1,5	**NR973-2G280S/4**		1687		
	65	10655	**22,95**	129617	1,7					
	73	9466	**20,36**	133773	1,9					
	82	8450	**18,15**	133347	2,1					
	92	7616	**16,23**	131419	2,4	**MR972-3G280S/4**	133,0	1597	137	IE3
	103	6766	**14,40**	127765	2,7	**NR972-3G280S/4**		1637		
	115	6050	**12,86**	124330	3,0	**MR972-2G280S/4**	133,0	1597		IE2
	129	5439	**11,56**	121086	3,3	**NR972-2G280S/4**		1637		
	149	4704	**9,99**	115903	2,6					
	168	4178	**8,86**	112471	2,7					
	188	3736	**7,92**	109274	2,9					
	209	3358	**7,11**	106276	3,0					
	54	12420	**27,39**	75762	1,0	**MR873-3G280S/4**	133,0	1017	134	IE3
	62	10824	**23,87**	81614	1,2	**NR873-3G280S/4**		1022		
	73	9193	**20,28**	82767	1,4	**MR873-2G280S/4**	133,0	1017		IE2
	83	8082	**17,83**	83092	1,6	**NR873-2G280S/4**		1022		
	92	7293	**16,09**	83039	1,8					
	106	6355	**14,02**	82599	2,0					
	112	6029	**13,30**	93867	2,2					
	128	5254	**11,59**	91468	2,4					
	147	4671	**10,09**	91091	2,5	**MR872-3G280S/4**	133,0	1012	134	IE3
	167	4107	**8,87**	88460	2,7	**NR872-3G280S/4**		1017		
	197	3498	**7,55**	77035	3,0	**MR872-2G280S/4**	133,0	1012		IE2
	224	3075	**6,64**	75407	3,3	**NR872-2G280S/4**		1017		
	248	2775	**5,99**	74037	3,6					
	284	2418	**5,22**	72130	3,9					
	300	2294	**4,95**	75684	3,9					
	344	1999	**4,32**	73144	4,0					
90 117	50	16421	**29,49**	104131	1,1	**MR973-3G280M/4**	158,0	1643	137	IE3
	57	14484	**26,03**	113862	1,2	**NR973-3G280M/4**		1693		
	65	12787	**22,95**	121338	1,4	**MR973-2G280M/4**	158,0	1643		IE2
	73	11359	**20,36**	127007	1,6	**NR973-2G280M/4**		1693		
	82	10141	**18,15**	130083	1,8					

*: Geared motor prices are different for IE2 and IE3 motors.

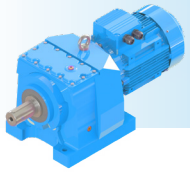

MR/MV/MN/NR/NV/NN - PERFORMANCE TABLES

Power P_g [kW] P_g [HP]	IE3 Output Speeds n_2 [r.p.m]	IE3 Output Torque M_2 [Nm]	Ratio i	IE3 Radial Loads (Output) F_{qam} [N]	IE3 Service Factors f_s	Type	Rated Current [A]	Weight ~ [kg]	Dim. Page	* Motor Eff. Class
90 117	92	9140	**16,23**	128770	2,0	**MR972-3G280M/4**	158,0	1603	137	IE3
	103	8119	**14,40**	125414	2,2	**NR972-3G280M/4**		1653		
	115	7260	**12,86**	122231	2,5	**MR972-2G280M/4**	158,0	1603		IE2
	129	6527	**11,56**	119200	2,8	**NR972-2G280M/4**		1653		
	149	5645	**9,99**	114107	2,2					
	168	5014	**8,86**	110878	2,3					
	188	4483	**7,92**	107851	2,4					
	209	4031	**7,11**	104997	2,5					
	73	11031	**20,28**	74419	1,2	**MR873-3G280M/4**	158,0	1043	134	IE3
	83	9699	**17,83**	75752	1,3	**NR873-3G280M/4**		1048		
	92	8751	**16,09**	76416	1,5	**MR873-2G280M/4**	158,0	1043		IE2
	106	7626	**14,02**	76828	1,7	**NR873-2G280M/4**		1048		
	112	7235	**13,30**	90699	1,8					
	128	6305	**11,59**	88706	2,0					
	147	5605	**10,09**	89112	2,1	**MR872-3G280M/4**	158,0	1038	134	IE3
	167	4928	**8,87**	86721	2,3	**NR872-3G280M/4**		1043		
	197	4197	**7,55**	73925	2,5	**MR872-2G280M/4**	158,0	1038		IE2
	224	3690	**6,64**	72672	2,8	**NR872-2G280M/4**		1043		
	248	3330	**5,99**	71570	3,0					
	284	2902	**5,22**	69980	3,3					
	300	2753	**4,95**	74505	3,3					
	344	2399	**4,32**	72116	3,6					
110 150	65	15608	**22,95**	108281	1,2	**MR973-3G315S/4**	194,0	1899	137	IE3
	73	13865	**20,36**	116605	1,3	**NR973-3G315S/4**		1949		
	82	12378	**18,15**	122950	1,5	**MR973-2G315S/4**	195,0	1822		IE2
						NR973-2G315S/4		1872		
	92	11157	**16,23**	125205	1,6	**MR972-3G315S/4**	194,0	1859	137	IE3
	103	9910	**14,40**	122246	1,8	**NR972-3G315S/4**		1909		
	116	8862	**12,86**	119396	2,0	**MR972-2G315S/4**	195,0	1782		IE2
	129	7967	**11,56**	116650	2,3	**NR972-2G315S/4**		1832		
	149	6890	**9,99**	111679	1,8					
	168	6120	**8,86**	108720	1,9					
	188	5473	**7,92**	105919	2,0					
	209	4920	**7,11**	103259	2,0					
132 180	73	16639	**20,36**	102822	1,1	**MR973-3G315M/4a**	230,0	1943	137	IE3
	82	14854	**18,15**	112011	1,2	**NR973-3G315M/4a**		1993		
						MR973-2G315M/4a	235,0			IE2
						NR973-2G315M/4a				
	92	13388	**16,23**	118708	1,3	**MR972-3G315M/4a**	230,0	1903	137	IE3
	103	11893	**14,40**	118803	1,5	**NR972-3G315M/4a**		1953		
	116	10634	**12,86**	116321	1,7	**MR972-2G315M/4a**	235,0	1882		IE2
	129	9561	**11,56**	113887	1,9	**NR972-2G315M/4a**		1932		
	149	8269	**9,99**	109049	1,5					
	168	7345	**8,86**	106386	1,6					
	188	6567	**7,92**	103834	1,6					
	209	5904	**7,11**	101386	1,7					
160 218	103	14406	**14,40**	114086	1,2	**MR972-3G315M/4b**	275,0	1954	137	IE3
	116	12882	**12,86**	112393	1,4	**NR972-3G315M/4b**		2004		
	129	11582	**11,56**	110358	1,6	**MR972-2G315M/4b**	280,0	1906		IE2
	149	10016	**9,99**	105688	1,2	**NR972-2G315M/4b**		1956		
	168	8897	**8,86**	103402	1,3					
	188	7956	**7,92**	101167	1,3					

*: Geared motor prices are different for IE2 and IE3 motors.

Power P_g [kW] P_g [HP]	IE3 Output Speeds n_2 [r.p.m]	IE3 Output Torque M_2 [Nm]	Ratio i	IE3 Radial Loads (Output) F_{qam} [N]	IE3 Service Factors f_s	Type	Rated Current [A]	Weight ~ [kg]	Dim. Page	* Motor Eff. Class
160 218	209	7152	**7,11**	98988	1,4	**MR972-3G315M/4b** **NR972-3G315M/4b** **MR972-2G315M/4b** **NR972-2G315M/4b**	275,0 280,0	1954 2004 1906 1956	137	IE3 IE2

*: Geared motor prices are different for IE2 and IE3 motors.

MT / NT - PERFORMANCE TABLES

Nominal Torques	Ratio	Output Speeds	Type	P_e= Nominal Power [kW] (For Service Factor f_s=1,0)						Radial Loads (Output)	Radial Loads (Input)	Weight	Dim. Page
				Input speed [rpm]									
M_a [Nm] (n_1=1450rpm)	i	n_2 [r.p.m] (n_1=1450rpm)		n_1=2900	n_1=1450	n_1=950	n_1=725	n_1=475	n_1=360	F_{qam} [N] (n_1=1450rpm)	F_{qem} [N] (n_1=1450rpm)	[kg]	
53	3,62	401	**MT002**	3,6	**2,3**	1,8	1,4	1,1	0,89	359	-	11	322
55	3,90	372	**NT002**	3,5	**2,2**	1,7	1,4	1,1	0,83	349	-	12	
58	4,56	318		3,2	**2,0**	1,5	1,3	0,94	0,71	366	-		
64	5,57	260		2,9	**1,8**	1,4	1,1	0,77	0,58	566	-		
66	6,00	242		2,7	**1,7**	1,3	1,1	0,71	0,54	571	-		
69	6,91	210		2,5	**1,6**	1,2	0,94	0,62	0,47	685	-		
71	7,45	195		2,4	**1,5**	1,2	0,88	0,58	0,44	697	-		
72	7,84	185		2,3	**1,5**	1,1	0,83	0,55	0,41	767	-		
74	8,45	172		2,2	**1,4**	1,0	0,77	0,51	0,38	783	-		
74	8,70	167		2,1	**1,4**	0,98	0,75	0,49	0,37	752	-		
78	9,87	147		2,0	**1,3**	0,87	0,66	0,43	0,33	823	-		
65	11,14	130		1,5	**0,93**	0,73	0,59	0,39	0,29	1244	235		
80	13,61	107	**MT003**	1,4	**0,95**	0,64	0,49	0,32	0,24	567	415	12	322
82	14,67	99	**NT003**	1,4	**0,90**	0,59	0,45	0,30	0,23	582	418	13	
82	16,89	86		1,4	**0,79**	0,52	0,40	0,26	0,20	823	552		
82	18,20	80		1,4	**0,73**	0,48	0,37	0,24	0,18	900	560		
82	19,17	76		1,3	**0,69**	0,46	0,35	0,23	0,17	1016	589		
82	20,66	70		1,3	**0,64**	0,42	0,32	0,21	0,16	1097	597		
82	21,26	68		1,2	**0,63**	0,41	0,32	0,21	0,16	1068	577		
82	24,13	60		1,1	**0,55**	0,36	0,28	0,18	0,14	1272	611		
82	28,38	51		0,94	**0,47**	0,31	0,24	0,16	0,12	1465	649		
82	32,02	45		0,76	**0,42**	0,28	0,21	0,14	0,11	1645	674		
82	40,04	36		0,67	**0,34**	0,22	0,17	0,11	0,08	1911	670		
82	45,18	32		0,60	**0,30**	0,20	0,15	0,10	0,07	2108	692		
70	3,94	368	**MT102**	4,4	**2,8**	2,1	1,7	1,3	1,1	1041	-	13	323
75	4,57	317	**NT102**	4,1	**2,6**	1,9	1,7	1,3	1,0	1084	-	14	
80	5,01	289		3,8	**2,5**	1,9	1,5	1,2	0,98	1101	-		
80	5,47	265		3,7	**2,3**	1,8	1,5	1,1	0,94	1149	-		
85	6,48	224		3,4	**2,1**	1,6	1,3	1,0	0,79	1213	-		
90	6,93	209		3,2	**2,1**	1,5	1,3	0,98	0,74	1221	-		
90	8,01	181		2,8	**1,8**	1,4	1,1	0,85	0,69	1369	520		
95	9,29	156		2,6	**1,6**	1,2	1,0	0,79	0,60	1435	531		
100	10,18	142		2,3	**1,6**	1,2	0,94	0,72	0,54	1468	516		
100	11,12	130		2,3	**1,4**	1,1	0,90	0,66	0,50	1529	600		
105	13,15	110		2,0	**1,3**	0,99	0,82	0,56	0,42	1622	597		
110	14,08	103		1,91	**1,2**	0,96	0,77	0,52	0,40	1644	535		
115	15,95	91		1,79	**1,2**	0,89	0,70	0,46	0,35	1712	476		
110	17,33	84	**MT103**	1,6	**1,0**	0,80	0,66	0,43	0,33	1735	816	14	323
120	20,51	71	**NT103**	1,4	**0,95**	0,73	0,56	0,36	0,28	1812	804	15	
120	21,96	66		1,4	**0,89**	0,68	0,52	0,34	0,26	1871	811		
130	24,86	58		1,3	**0,85**	0,60	0,46	0,30	0,23	1919	791		
140	29,40	49		1,2	**0,77**	0,51	0,39	0,26	0,19	2105	924		
140	32,25	45		1,1	**0,70**	0,46	0,35	0,23	0,18	2196	934		
140	35,21	41		1,1	**0,65**	0,43	0,33	0,21	0,16	2286	942		
140	41,66	35		0,93	**0,55**	0,36	0,28	0,18	0,14	2464	953		
140	44,60	33		0,91	**0,51**	0,34	0,26	0,17	0,13	2540	957		
140	50,51	29		0,84	**0,45**	0,30	0,23	0,15	0,11	2682	961		
110	3,38	429	**MT172**	7,8	**5,1**	4,1	3,3	2,6	2,1	575	-	15	324
120	4,09	343	**NT172**	7,4	**4,4**	3,6	3,2	2,3	1,9	609	-	16	
130	4,78	293		6,9	**4,1**	3,5	3,1	2,1	1,6	591	-		
135	5,78	242		6,3	**3,5**	3,2	2,8	1,7	1,3	772	-		
145	6,60	212		5,7	**3,3**	3,0	2,5	1,5	1,2	888	-		
155	7,08	198		5,6	**3,3**	2,8	2,3	1,4	1,1	856	-		
160	7,60	184		5,4	**3,2**	2,6	2,2	1,3	1,0	746	-		
165	8,94	157		4,7	**2,8**	2,2	1,8	1,1	0,86	861	-		
170	9,53	147		4,6	**2,7**	2,1	1,7	1,0	0,81	852	-		
180	11,08	126		4,0	**2,5**	1,8	1,5	0,89	0,69	1257	-		
190	12,66	111		3,6	**2,3**	1,6	1,3	0,78	0,61	1284	-		

Nominal Torques	Ratio	Output Speeds	Type	P_e= Nominal Power [kW] (For Service Factor f_s=1,0)						Radial Loads (Output)	Radial Loads (Input)	Weight	Dim. Page
				Input speed [rpm]									
M_a [Nm] (n_1=1450rpm)	i	n_2 [r.p.m] (n_1=1450rpm)		n_1=2900	n_1=1450	n_1=950	n_1=725	n_1=475	n_1=360	F_{qam} [N] (n_1=1450rpm)	F_{qem} [N] (n_1=1450rpm)	[kg]	
195	14,57	99	**MT172**	3,4	**2,1**	1,4	1,1	0,72	0,54	1360	-	15	324
200	17,14	85	**NT172**	3,0	**1,9**	1,2	0,93	0,61	0,46	1534	-	16	
200	18,28	79		2,9	**1,7**	1,1	0,87	0,57	0,43	1639	-		
200	20,92	69		2,6	**1,5**	1,00	0,76	0,50	0,38	1869	-		
200	26,10	56	**MT173**	1,5	**1,2**	0,81	0,62	0,41	0,31	2811	813	16	324
200	30,26	48	**NT173**	1,4	**1,1**	0,70	0,54	0,35	0,27	3008	834	17	
200	36,24	40		1,3	**0,90**	0,59	0,45	0,30	0,22	3262	860		
200	42,87	34		1,2	**0,76**	0,50	0,38	0,25	0,19	3514	874		
200	45,90	32		1,2	**0,71**	0,47	0,36	0,23	0,18	3620	880		
200	49,81	29		1,1	**0,65**	0,43	0,33	0,22	0,16	3750	975		
200	57,76	25		1,0	**0,57**	0,37	0,28	0,19	0,14	3995	986		
200	69,16	21		0,94	**0,47**	0,31	0,24	0,16	0,12	4310	999		
200	81,82	18		0,80	**0,40**	0,26	0,20	0,13	0,10	4622	1007		
200	87,60	17		0,75	**0,38**	0,25	0,19	0,12	0,09	4753	1010		
200	99,21	15		0,66	**0,33**	0,22	0,17	0,11	0,08	5001	1013		
125	3,50	414	**MT202**	8,9	**5,6**	4,4	3,5	2,7	2,3	2223	-	20	325
145	4,20	345	**NT202**	8,6	**5,4**	4,1	3,3	2,6	2,2	2061	-	22	
150	4,50	322		8,3	**5,2**	4,0	3,2	2,5	2,1	2072	-		
160	5,08	286		7,7	**5,0**	3,8	3,1	2,4	2,0	2061	-		
175	5,80	250		7,3	**4,8**	3,6	2,9	2,3	1,9	1965	-		
185	7,04	206		6,5	**4,1**	3,2	2,6	2,0	1,6	2876	606		
200	8,40	173		5,8	**3,8**	2,8	2,3	1,7	1,3	2972	619		
210	10,07	144		5,2	**3,3**	2,5	2,1	1,5	1,1	3208	719		
215	10,81	134		4,9	**3,1**	2,4	1,9	1,4	1,0	3283	725		
225	12,18	119		4,7	**2,9**	2,2	1,8	1,2	0,91	3392	723		
235	13,92	104		4,2	**2,7**	2,1	1,6	1,1	0,80	3551	726		
240	14,86	98		4,0	**2,6**	2,0	1,5	0,98	0,75	3633	716		
245	16,03	90		3,8	**2,4**	1,8	1,4	0,91	0,69	3749	728		
260	18,85	77		3,4	**2,2**	1,6	1,2	0,78	0,59	3928	663		
260	20,10	72		3,3	**2,1**	1,5	1,1	0,73	0,55	4129	722		
280	23,01	63		3,0	**1,9**	1,3	0,97	0,64	0,48	4154	556		
270	23,23	62	**MT203**	2,9	**1,9**	1,3	0,98	0,64	0,49	3314	1142	21	325
275	24,77	59	**NT203**	2,8	**1,8**	1,2	0,92	0,60	0,46	3406	1141	23	
280	28,35	51		2,6	**1,6**	1,1	0,80	0,53	0,40	3751	1151		
280	36,02	40		2,0	**1,3**	0,82	0,63	0,41	0,31	5277	1482		
280	41,16	35		1,8	**1,1**	0,72	0,55	0,36	0,28	5576	1498		
280	43,94	33		1,8	**1,0**	0,68	0,52	0,34	0,26	5728	1504		
280	47,39	31		1,7	**0,96**	0,63	0,48	0,32	0,27	5907	1512		
280	55,74	26		1,5	**0,82**	0,54	0,41	0,27	0,23	6308	1525		
280	59,43	24		1,4	**0,77**	0,50	0,39	0,25	0,21	6472	1530		
280	68,03	21		1,3	**0,67**	0,44	0,34	0,25	0,19	6830	1540		
195	3,16	459	**MT272**	15	**9,6**	7,3	6,0	4,7	3,8	566	-	25	326
205	3,69	393	**NT272**	14	**8,7**	6,7	5,4	4,2	3,5	602	-	27	
230	4,53	320		12	**8,0**	5,9	4,9	3,8	3,1	863	-		
265	5,28	274		12	**7,9**	5,9	4,9	3,5	2,9	479	-		
330	6,21	233		14	**8,3**	6,2	5,2	3,8	2,9	-	-		
360	8,71	167		10	**6,5**	4,7	4,0	2,7	2,0	474	-		
375	10,16	143		9,1	**5,8**	4,4	3,5	2,3	1,7	566	-		
390	11,95	121		8,1	**5,1**	3,9	3,0	2,0	1,5	695	-		
410	14,21	102		7,2	**4,6**	3,3	2,5	1,7	1,3	788	-		
425	16,07	90		6,7	**4,2**	2,9	2,2	1,5	1,1	858	-		
445	18,33	79		6,0	**3,8**	2,6	2,0	1,3	0,97	880	-		
450	21,43	68		5,4	**3,3**	2,2	1,7	1,1	0,83	1239	-		
450	25,89	56		4,8	**2,8**	1,8	1,4	0,91	0,69	1805	-		
435	19,00	76	**MT273**	5,6	**3,7**	2,5	1,9	1,3	0,95	190	275	26	326
435	25,55	57	**NT273**	4,2	**2,7**	1,9	1,4	0,93	0,71	2013	1276	28	

MT / NT - PERFORMANCE TABLES

Nominal Torques	Ratio	Output Speeds	Type	P_e= Nominal Power [kW] (For Service Factor f_s=1,0)						Radial Loads (Output)	Radial Loads (Input)	Weight	Dim. Page
				Input speed [rpm]									
M_a [Nm] (n_1=1450rpm)	i	n_2 [r.p.m] (n_1=1450rpm)		n_1=2900	n_1=1450	n_1=950	n_1=725	n_1=475	n_1=360	F_{qam} [N] (n_1=1450rpm)	F_{qem} [N] (n_1=1450rpm)	[kg]	
450	30,48	48	**MT273**	3,7	**2,4**	1,6	1,2	0,78	0,59	2323	1303	26	326
450	36,55	40	**NT273**	3,3	**2,0**	1,3	1,0	0,65	0,50	2933	1343	28	
450	42,41	34		3,0	**1,7**	1,1	0,86	0,56	0,43	3461	1480		
450	50,59	29		2,7	**1,4**	0,94	0,72	0,47	0,36	4123	1508		
450	60,66	24		2,4	**1,2**	0,79	0,60	0,40	0,30	4845	1532		
450	73,35	20		2,0	**0,99**	0,65	0,50	0,33	0,28	5650	1552		
450	83,83	17		1,7	**0,87**	0,57	0,44	0,29	0,24	6247	1565		
450	96,52	15		1,5	**0,76**	0,50	0,38	0,25	0,21	6700	1576		
450	113,52	13		1,3	**0,65**	0,43	0,33	0,24	0,18	6700	1586		
450	121,03	12		1,2	**0,61**	0,40	0,31	0,22	0,17	6700	1590		
450	138,55	10		1,1	**0,53**	0,35	0,27	0,20	0,15	6700	1598		
450	149,02	9,7	**MT275**	1,0	**0,51**	0,34	0,26	0,19	0,14	6700	684	39	327
450	180,21	8,0	**NT275**	0,85	**0,42**	0,28	0,24	0,15	0,12	6700	716	41	
450	205,95	7,0		0,74	**0,37**	0,27	0,21	0,14	0,10	6700	735		
450	215,91	6,7		0,71	**0,35**	0,26	0,20	0,13	0,10	6700	736		
450	252,20	5,7		0,61	**0,30**	0,22	0,17	0,11	0,08	6700	743		
450	332,52	4,4		0,51	**0,26**	0,19	0,14	0,09	0,07	6700	786		
450	358,33	4,0		0,47	**0,24**	0,17	0,13	0,09	0,07	6700	789		
450	418,57	3,5		0,41	**0,20**	0,15	0,11	0,07	0,06	6700	793		
450	499,32	2,9		0,34	**0,17**	0,12	0,09	0,06	0,05	6700	806		
450	598,70	2,4		0,29	**0,14**	0,10	0,08	0,05	0,04	6700	816		
450	724,01	2,0		0,26	**0,12**	0,09	0,07	0,04	0,03	6700	825		
450	827,44	1,8		0,23	**0,10**	0,08	0,06	0,04	0,03	6700	831		
450	952,64	1,5		0,20	**0,09**	0,07	0,05	0,03	0,02	6700	836		
450	1120,49	1,3		0,17	**0,08**	0,06	0,04	0,03	0,02	6700	841		
450	1194,61	1,2		0,16	**0,07**	0,05	0,04	0,03	0,02	6700	843		
450	1463,49	0,99	**MT276**	0,13	**0,06**	0,04	0,03	0,02	0,02	6700	848	40	327
450	1769,80	0,82	**NT276**	0,11	**0,05**	0,04	0,03	0,02	0,01	6700	851	42	
450	2022,63	0,72		0,10	**0,04**	0,03	0,02	0,02	0,01	6700	854		
450	2328,68	0,62		0,08	**0,04**	0,03	0,02	0,01	0,01	6700	856		
450	2738,97	0,53		0,07	**0,03**	0,02	0,02	0,01	0,01	6700	858		
450	2920,17	0,50		0,07	**0,03**	0,02	0,02	0,01	0,01	6700	859		
220	3,15	460	**MT282**	17	**11**	8,2	6,5	5,3	4,4	2212	-	37	328
240	3,64	398	**NT282**	16	**10**	7,9	6,5	4,8	4,1	2153	-	39	
260	4,20	345		16	**9,7**	7,8	6,2	4,8	3,9	2106	-		
280	4,62	314		16	**9,5**	7,8	6,1	4,6	3,8	1960	-		
320	5,35	271		15	**9,4**	7,7	6,1	4,6	3,8	1584	-		
360	6,25	232		15	**9,1**	6,9	5,7	4,4	3,7	1247	-		
370	7,21	201		13	**8,1**	6,2	5,0	4,0	3,2	2419	-		
390	8,33	174		11	**7,4**	5,6	4,6	3,5	2,8	2509	-		
400	9,61	151		10	**6,5**	4,9	4,0	3,1	2,5	2774	102		
410	10,57	137		9,49	**6,1**	4,6	3,7	3,0	2,2	2907	156		
420	12,24	118		8,71	**5,4**	4,1	3,4	2,6	1,9	3220	289		
440	14,31	101		7,69	**4,9**	3,8	3,1	2,2	1,7	3429	301		
470	16,91	86		6,89	**4,4**	3,3	2,7	1,9	1,4	3550	208		
480	19,06	76		6,29	**4,0**	3,1	2,5	1,6	1,3	3837	251		
500	21,66	67		5,83	**3,7**	2,8	2,2	1,5	1,1	4018	193		
530	25,23	57		5,26	**3,3**	2,5	1,9	1,2	0,94	4167	64		
560	30,37	48		4,59	**2,9**	2,1	1,6	1,0	0,78	4493	-		
270	18,33	79	**MT283**	3,6	**2,4**	1,9	1,6	1,2	1,1	6793	1822	38	328
290	20,25	72	**NT283**	3,5	**2,3**	1,8	1,5	1,2	0,99	7049	1811	40	
320	23,63	61		3,2	**2,2**	1,7	1,4	1,1	0,90	7456	1796		
340	27,80	52		2,9	**2,0**	1,5	1,3	1,0	0,83	5566	1795		
480	30,82	47		3,8	**2,5**	2,0	1,6	1,0	0,79	5446	1857		
515	35,98	40		3,5	**2,3**	1,8	1,4	0,89	0,67	5697	1860		
550	41,96	35		3,3	**2,1**	1,5	1,2	0,76	0,58	5967	1867		
570	46,37	31		3,0	**2,0**	1,4	1,1	0,69	0,52	6164	1869		

Nominal Torques	Ratio	Output Speeds	Type	P_e= Nominal Power [kW] (For Service Factor f_s=1,0)						Radial Loads (Output)	Radial Loads (Input)	Weight	Dim. Page
				Input speed [rpm]									
M_a [Nm] (n_1=1450rpm)	i	n_2 [r.p.m] (n_1=1450rpm)		n_1=2900	n_1=1450	n_1=950	n_1=725	n_1=475	n_1=360	F_{qam} [N] (n_1=1450rpm)	F_{qem} [N] (n_1=1450rpm)	[kg]	
600	54,12	27	**MT283**	2,7	**1,8**	1,2	0,90	0,59	0,45	6490	1874	38	328
600	63,65	23	**NT283**	2,5	**1,5**	1,0	0,77	0,50	0,38	6979	1894	40	
600	75,68	19		2,3	**1,3**	0,85	0,65	0,42	0,32	7530	1913		
600	85,60	17		2,1	**1,1**	0,75	0,57	0,38	0,29	7942	1924		
600	97,62	15		1,9	**1,0**	0,66	0,50	0,33	0,25	8400	1934		
600	114,14	13		1,7	**0,86**	0,56	0,43	0,28	0,24	8973	1945		
600	137,91	11		1,4	**0,71**	0,47	0,36	0,26	0,20	9150	1956		
600	158,52	9,1	**MT284**	1,3	**0,63**	0,41	0,31	0,23	0,17	9150	1581	39	329
600	175,17	8,3	**NT284**	1,1	**0,57**	0,37	0,28	0,21	0,16	9150	1603	41	
600	204,44	7,1		0,97	**0,49**	0,32	0,27	0,18	0,13	9150	1635		
600	240,47	6,0		0,83	**0,41**	0,27	0,23	0,15	0,11	9150	1663		
600	285,89	5,1		0,70	**0,35**	0,25	0,19	0,13	0,10	9150	1688		
600	323,39	4,5		0,62	**0,31**	0,22	0,17	0,11	0,09	9150	1703		
600	368,77	3,9		0,54	**0,27**	0,20	0,15	0,10	0,07	9150	1718		
600	431,18	3,4		0,51	**0,26**	0,19	0,14	0,09	0,07	9150	1778		
600	376,94	3,8	**MT285**	0,54	**0,27**	0,20	0,15	0,10	0,07	9150	1053	58	330
600	443,37	3,3	**NT285**	0,51	**0,26**	0,19	0,14	0,09	0,07	9150	1068	60	
600	491,50	3,0		0,46	**0,23**	0,17	0,13	0,08	0,06	9150	1077		
600	573,81	2,5		0,40	**0,20**	0,14	0,11	0,07	0,05	9150	1089		
600	669,25	2,2		0,34	**0,17**	0,12	0,09	0,06	0,05	9150	1098		
600	739,53	2,0		0,31	**0,15**	0,11	0,09	0,06	0,04	9150	1104		
600	863,11	1,7		0,26	**0,13**	0,10	0,07	0,05	0,04	9150	1111		
600	1015,21	1,4		0,25	**0,11**	0,08	0,06	0,04	0,03	9150	1118		
600	1206,98	1,2		0,21	**0,09**	0,07	0,05	0,03	0,03	9150	1124		
600	1365,28	1,1		0,19	**0,08**	0,06	0,05	0,03	0,02	9150	1128		
600	1817,07	0,80	**MT286**	0,14	**0,06**	0,05	0,04	0,02	0,02	9150	1135	59	330
600	2119,30	0,68	**NT286**	0,12	**0,06**	0,04	0,03	0,02	0,02	9150	1138	61	
600	2341,83	0,62		0,11	**0,05**	0,04	0,03	0,02	0,01	9150	1140		
600	2733,17	0,53		0,09	**0,04**	0,03	0,02	0,02	0,01	9150	1143		
600	3214,82	0,45		0,08	**0,04**	0,03	0,02	0,01	0,01	9150	1145		
385	3,28	443	**MT372**	29	**18**	14	11	8,8	7,3	882	-	45	331
410	3,74	388	**NT372**	27	**17**	13	11	8,4	6,9	782	-	48	
445	4,29	338		25	**16**	12	10	7,8	6,4	531	-		
475	4,96	292		24	**15**	12	9,3	7,3	6,0	411	-		
510	5,23	277		24	**15**	12	9,5	7,3	6,1	955	-		
530	5,97	243		22	**14**	11	8,7	6,8	5,4	1046	-		
560	6,84	212		20	**13**	9,8	8,0	6,2	4,7	1012	-		
560	8,25	176		17	**11**	8,1	6,6	5,2	3,9	2345	-		
590	9,41	154		15	**9,9**	7,5	6,0	4,5	3,4	2379	-		
620	10,80	134		14	**9,0**	6,8	5,6	3,9	3,0	2456	-		
650	12,48	116		13	**8,2**	6,3	5,1	3,4	2,6	2586	-		
670	13,53	107		12	**7,8**	5,9	4,8	3,2	2,4	2623	-		
710	16,20	90		11	**6,9**	5,3	4,0	2,6	2,0	2807	-		
740	18,45	79		10	**6,3**	4,6	3,5	2,3	1,8	2952	-		
770	20,62	70		9,3	**5,9**	4,1	3,2	2,1	1,6	3033	-		
805	23,33	62		8,5	**5,5**	3,7	2,8	1,8	1,4	3122	-		
650	18,68	78	**MT373**	8,6	**5,5**	4,2	3,4	2,3	1,8	4992	1054	47	331
650	20,64	70	**NT373**	7,8	**5,0**	3,9	3,2	2,1	1,6	5243	1219	50	
650	21,65	67		7,5	**4,8**	3,8	3,0	2,0	1,5	5509	1550		
710	25,27	57		6,8	**4,5**	3,4	2,6	1,7	1,3	5712	1545		
750	29,47	49		6,1	**4,1**	2,9	2,2	1,5	1,1	6004	1564		
780	35,25	41		5,4	**3,5**	2,5	1,9	1,2	0,94	6429	1730		
820	41,16	35		4,8	**3,2**	2,1	1,6	1,1	0,80	6774	1745		
820	48,00	30		4,3	**2,7**	1,8	1,4	0,91	0,69	7281	1784		
820	53,04	27		4,1	**2,5**	1,6	1,3	0,82	0,62	7623	1803		
820	61,91	23		3,5	**2,1**	1,4	1,1	0,71	0,54	8177	1830		

MT / NT - PERFORMANCE TABLES

Nominal Torques	Ratio	Output Speeds	Type	P_e= Nominal Power [kW] (For Service Factor f_s=1,0)						Radial Loads (Output)	Radial Loads (Input)	Weight	Dim. Page
				Input speed [rpm]									
M_a [Nm] (n_1=1450rpm)	i	n_2 [r.p.m] (n_1=1450rpm)		n_1=2900	n_1=1450	n_1=950	n_1=725	n_1=475	n_1=360	F_{qam} [N] (n_1=1450rpm)	F_{qem} [N] (n_1=1450rpm)	[kg]	
820	72,81	20	**MT373**	3,2	**1,8**	1,2	0,92	0,60	0,46	8790	1854	47	331
820	86,57	17	**NT373**	2,8	**1,5**	1,0	0,77	0,51	0,39	9481	1876	50	
820	97,92	15		2,6	**1,4**	0,89	0,68	0,45	0,34	9999	1889		
820	111,67	13		2,4	**1,2**	0,79	0,60	0,40	0,30	10574	1902		
820	138,72	10		1,9	**0,97**	0,64	0,49	0,32	0,27	11581	1919		
820	157,76	9,2		1,7	**0,85**	0,56	0,43	0,28	0,24	11600	1928		
820	181,34	8,0	**MT374**	1,5	**0,75**	0,49	0,37	0,27	0,21	11600	745	57	332
820	200,38	7,2	**NT374**	1,4	**0,68**	0,44	0,34	0,25	0,19	11600	885	60	
820	233,86	6,2		1,2	**0,58**	0,38	0,29	0,21	0,16	11600	1598		
820	275,08	5,3		0,99	**0,49**	0,32	0,27	0,18	0,14	11600	1632		
820	327,04	4,4		0,83	**0,42**	0,27	0,23	0,15	0,11	11600	1662		
820	369,93	3,9		0,74	**0,37**	0,27	0,20	0,13	0,10	11600	1680		
820	421,85	3,4		0,65	**0,32**	0,24	0,18	0,12	0,09	11600	1698		
820	524,07	2,8		0,52	**0,26**	0,19	0,14	0,09	0,07	11600	1722		
820	488,82	3,0	**MT375**	0,57	**0,28**	0,21	0,16	0,10	0,08	11600	1076	63	333
820	533,70	2,7	**NT375**	0,52	**0,26**	0,19	0,15	0,10	0,07	11600	1080	66	
820	631,45	2,3		0,49	**0,25**	0,18	0,14	0,09	0,07	11600	1084		
820	676,02	2,1		0,46	**0,23**	0,17	0,13	0,08	0,06	11600	1085		
820	765,58	1,9		0,41	**0,20**	0,15	0,11	0,07	0,06	11600	1087		
820	845,97	1,7		0,37	**0,18**	0,13	0,10	0,07	0,05	11600	1094		
820	987,33	1,5		0,32	**0,16**	0,11	0,09	0,06	0,04	11600	1103		
820	1161,33	1,2		0,27	**0,13**	0,10	0,07	0,05	0,04	11600	1111		
820	1380,71	1,1		0,25	**0,11**	0,08	0,06	0,04	0,03	11600	1118		
820	1561,78	0,93		0,22	**0,10**	0,07	0,06	0,04	0,03	11600	1123		
820	1690,05	0,86	**MT376**	0,21	**0,09**	0,07	0,05	0,03	0,03	11600	1132	65	333
820	1999,59	0,73	**NT376**	0,18	**0,08**	0,06	0,04	0,03	0,02	11600	1134	68	
820	2140,73	0,68		0,17	**0,07**	0,05	0,04	0,03	0,02	11600	1134		
820	2424,34	0,60		0,15	**0,07**	0,05	0,04	0,02	0,02	11600	1135		
820	2678,89	0,54		0,13	**0,06**	0,04	0,03	0,02	0,02	11600	1137		
820	3126,56	0,46		0,11	**0,05**	0,04	0,03	0,02	0,01	11600	1140		
820	3677,53	0,39		0,10	**0,04**	0,03	0,02	0,02	0,01	11600	1142		
820	4372,24	0,33		0,08	**0,04**	0,03	0,02	0,01	0,01	11600	1145		
820	4945,64	0,29		0,07	**0,03**	0,02	0,02	0,01	0,01	11600	1146		
590	3,27	444	**MT472**	-	**28**	22	18	14	11	5155	-	76	334
650	3,83	378	**NT472**	41	**26**	20	16	13	11	5346	-	80	
710	4,54	320		38	**24**	19	15	12	9,8	5578	-		
800	4,89	297		41	**26**	19	16	12	9,8	5471	-		
925	5,66	256		-	**26**	20	16	12	9,9	5775	-		
985	6,65	218		38	**23**	17	14	11	8,8	6065	-		
1020	7,87	184		33	**20**	15	12	9,5	7,8	6482	-		
1025	8,47	171		31	**19**	14	12	8,8	7,2	6706	-		
1050	9,53	152		28	**17**	13	11	8,1	6,4	7024	-		
1100	10,79	134		26	**16**	12	9,7	7,4	5,7	7304	-		
1165	12,05	120		25	**15**	11	9,2	6,7	5,1	7668	-		
1205	13,56	107		23	**14**	10	8,5	5,9	4,5	7994	-		
1250	15,35	94		21	**13**	9,6	7,7	5,2	4,0	8350	-		
1295	17,25	84		19	**12**	8,9	7,1	4,7	3,5	8693	-		
1450	18,72	77		20	**12**	8,6	6,5	4,3	3,3	8586	-		
1455	22,15	65		18	**10**	7,3	5,5	3,6	2,8	9311	-		
1550	18,04	80	**MT473**	14	**14**	9,0	6,9	4,5	3,4	7923	-	78	334
1550	21,74	67	**NT473**	13	**11**	7,5	5,7	3,8	2,9	8734	-	82	
1550	25,67	56		14	**9,6**	6,3	4,8	3,2	2,4	9717	501		
1550	30,93	47		13	**8,0**	5,2	4,0	2,6	2,0	10629	932		
1550	37,45	39		11	**6,6**	4,3	3,3	2,2	1,7	11627	1297		
1550	42,75	34		9,7	**5,8**	3,8	2,9	1,9	1,5	12354	1511		

Nominal Torques	Ratio	Output Speeds	Type	P_e= Nominal Power [kW] (For Service Factor f_s=1,0)						Radial Loads (Output)	Radial Loads (Input)	Weight	Dim. Page
				Input speed [rpm]									
M_a [Nm] (n_1=1450rpm)	i	n_2 [r.p.m] (n_1=1450rpm)		n_1=2900	n_1=1450	n_1=950	n_1=725	n_1=475	n_1=360	F_{qam} [N] (n_1=1450rpm)	F_{qem} [N] (n_1=1450rpm)	[kg]	
1550	49,05	30	**MT473**	8,8	**5,1**	3,3	2,6	1,7	1,3	13146	1585	78	334
1550	55,82	26	**NT473**	8,0	**4,4**	2,9	2,2	1,5	1,1	13924	1819	82	
1550	63,70	23		7,3	**3,9**	2,6	2,0	1,3	0,98	14755	1857		
1550	73,09	20		6,8	**3,4**	2,2	1,7	1,1	0,86	15600	1891		
1550	86,52	17		5,7	**2,9**	1,9	1,5	0,95	0,72	15600	1930		
1550	91,58	16		5,4	**2,7**	1,8	1,4	0,90	0,68	15600	1941		
1550	109,64	13		4,5	**2,3**	1,5	1,2	0,76	0,57	15600	1971		
1550	124,85	12		4,0	**2,0**	1,3	1,0	0,66	0,50	15600	1989		
1550	139,54	10		3,6	**1,8**	1,2	0,91	0,60	0,45	15600	2006		
1550	157,90	9,2		3,2	**1,6**	1,1	0,80	0,53	0,40	15600	2020		
1550	194,05	7,5		2,6	**1,3**	0,86	0,66	0,43	0,33	15600	2039		
1550	219,00	6,6		2,3	**1,2**	0,76	0,58	0,38	0,29	15600	2047		
1550	229,46	6,3	**MT474**	2,2	**1,1**	0,73	0,56	0,36	0,28	15600	1470	72	335
1550	259,55	5,6	**NT474**	2,0	**0,98**	0,64	0,49	0,32	0,27	15600	1480	76	
1550	295,98	4,9		1,7	**0,86**	0,57	0,43	0,28	0,24	15600	1489		
1550	346,07	4,2		1,5	**0,74**	0,48	0,37	0,27	0,20	15600	1498		
1550	418,16	3,5		1,2	**0,61**	0,40	0,31	0,22	0,17	15600	1507		
1550	442,61	3,3		1,2	**0,58**	0,38	0,29	0,21	0,16	15600	1519		
1550	529,93	2,7		0,97	**0,49**	0,32	0,27	0,18	0,13	15600	1553		
1550	603,46	2,4		0,85	**0,43**	0,28	0,24	0,16	0,12	15600	1574		
1550	674,46	2,1		0,76	**0,38**	0,28	0,21	0,14	0,11	15600	1590		
1550	726,85	2,0	**MT475**	0,72	**0,36**	0,26	0,20	0,13	0,10	15600	1751	88	336
1550	871,52	1,7	**NT475**	0,60	**0,30**	0,22	0,17	0,11	0,08	15600	1756	92	
1550	934,94	1,6		0,56	**0,28**	0,20	0,16	0,10	0,08	15600	1758		
1550	1053,93	1,4		0,56	**0,28**	0,20	0,15	0,10	0,08	15600	1761		
1550	1204,49	1,2		0,49	**0,24**	0,18	0,14	0,09	0,07	15600	1764		
1550	1285,79	1,1		0,46	**0,23**	0,17	0,13	0,08	0,06	15600	1765		
1550	1386,75	1,0		0,42	**0,21**	0,15	0,12	0,08	0,06	15600	1767		
1550	1631,08	0,89		0,36	**0,18**	0,13	0,10	0,07	0,05	15600	1769		
1550	1738,98	0,83		0,34	**0,17**	0,12	0,09	0,06	0,05	15600	1770		
1550	1990,76	0,73		0,30	**0,15**	0,11	0,08	0,05	0,04	15600	1772		
1550	2107,15	0,69		0,28	**0,14**	0,10	0,08	0,05	0,04	15600	1775		
1550	2522,85	0,57		0,26	**0,12**	0,09	0,06	0,04	0,03	15600	1782		
1550	3115,96	0,47	**MT476**	0,21	**0,10**	0,07	0,05	0,03	0,03	15600	1801	90	336
1550	3561,10	0,41	**NT476**	0,19	**0,08**	0,06	0,05	0,03	0,02	15600	1802	94	
1550	3801,48	0,38		0,18	**0,08**	0,06	0,04	0,03	0,02	15600	1802		
1550	4099,95	0,35		0,16	**0,07**	0,05	0,04	0,03	0,02	15600	1803		
1550	4822,33	0,30		0,14	**0,06**	0,05	0,03	0,02	0,02	15600	1804		
1550	5141,34	0,28		0,13	**0,06**	0,04	0,03	0,02	0,02	15600	1804		
1550	5885,71	0,25		0,11	**0,05**	0,04	0,03	0,02	0,01	15600	1805		
1550	6229,83	0,23		0,11	**0,05**	0,04	0,03	0,02	0,01	15600	1806		
1550	7458,85	0,19		0,09	**0,04**	0,03	0,02	0,01	0,01	15600	1808		
1830	4,37	332	**MT572**	-	**65**	49	40	31	27	7606	-	109	337
1910	4,95	293	**NT572**	-	**60**	46	37	29	24	7923	-	119	
1980	5,63	258		-	**55**	42	34	26	21	8305	-		
2080	6,43	225		-	**51**	38	31	24	18	8663	-		
2180	7,41	196		-	**46**	35	28	21	16	9083	-		
2160	8,34	174		-	**41**	30	25	19	14	10086	-		
2200	9,48	153		-	**36**	27	22	16	13	10654	-		
2250	10,85	134		-	**33**	24	20	14	11	11258	-		
2320	12,50	116		-	**29**	22	18	13	9,4	11892	-		
2390	14,54	100		42	**26**	19	16	11	8,1	12621	-		
2460	17,07	85		37	**23**	17	14	9,1	6,9	13454	-		
2520	19,15	76		34	**21**	16	12	8,1	6,2	14065	-		
2650	23,02	63		29	**18**	13	10	6,8	5,1	15021	-		
2750	27,00	54		26	**16**	12	8,8	5,8	4,4	15943	-		

MT / NT - PERFORMANCE TABLES

Nominal Torques	Ratio	Output Speeds	Type	P_e= Nominal Power [kW] (For Service Factor f_s=1,0)						Radial Loads (Output)	Radial Loads (Input)	Weight	Dim. Page
				Input speed [rpm]									
M_a [Nm] (n_1=1450rpm)	i	n_2 [r.p.m] (n_1=1450rpm)		n_1=2900	n_1=1450	n_1=950	n_1=725	n_1=475	n_1=360	F_{qam} [N] (n_1=1450rpm)	F_{qem} [N] (n_1=1450rpm)	[kg]	
2390	22,64	64	**MT573**	27	**17**	13	10	7,0	5,3	15500	470	111	337
2520	26,54	55	**NT573**	24	**15**	11	9,0	5,9	4,5	16343	538	121	
2650	31,38	46		21	**13**	10	7,7	5,0	3,8	17314	601		
2750	35,31	41		20	**12**	8,9	6,8	4,5	3,4	18022	595		
2860	39,98	36		18	**11**	7,9	6,0	4,0	3,0	18799	559		
3000	48,74	30		16	**10**	6,5	4,9	3,3	2,5	19500	2621		
3000	54,74	26		14	**8,8**	5,8	4,4	2,9	2,2	19500	2960		
3000	64,72	22		13	**7,4**	4,9	3,7	2,5	1,9	19500	3030		
3000	72,81	20		12	**6,6**	4,3	3,3	2,2	1,7	19500	3073		
3000	82,45	18		11	**5,8**	3,8	2,9	1,9	1,5	19500	3112		
3000	100,53	14		9,5	**4,8**	3,2	2,4	1,6	1,2	19500	3165		
3000	118,95	12		8,1	**4,1**	2,7	2,1	1,3	1,0	19500	3202		
3000	134,45	11		7,2	**3,6**	2,4	1,8	1,2	0,90	19500	3226		
3000	153,61	9,4		6,3	**3,2**	2,1	1,6	1,0	0,79	19500	3248		
3000	167,32	8,7		5,8	**2,9**	1,9	1,5	0,96	0,73	19500	3262		
3000	194,15	7,5	**MT574**	5,1	**2,5**	1,7	1,3	0,83	0,63	19500	1601	128	338
3000	221,40	6,5	**NT574**	4,5	**2,2**	1,5	1,1	0,73	0,55	19500	1623	138	
3000	258,87	5,6		3,8	**1,9**	1,3	0,96	0,63	0,47	19500	1647		
3000	291,25	5,0		3,4	**1,7**	1,1	0,85	0,56	0,42	19500	1712		
3000	301,59	4,8		3,3	**1,6**	1,1	0,82	0,54	0,41	19500	1826		
3000	343,91	4,2		2,9	**1,4**	0,94	0,72	0,47	0,36	19500	1840		
3000	402,12	3,6		2,5	**1,2**	0,81	0,62	0,40	0,31	19500	1855		
3000	485,89	3,0		2,1	**1,0**	0,67	0,51	0,34	0,25	19500	1871		
3000	574,90	2,5		1,7	**0,87**	0,57	0,43	0,28	0,24	19500	1927		
3000	620,62	2,3	**MT575**	1,7	**0,82**	0,54	0,41	0,27	0,23	19500	1514	132	339
3000	698,26	2,1	**NT575**	1,5	**0,73**	0,48	0,37	0,27	0,20	19500	1548	142	
3000	790,68	1,8		1,3	**0,65**	0,42	0,32	0,24	0,18	19500	1580		
3000	964,05	1,5		1,1	**0,53**	0,35	0,27	0,19	0,15	19500	1623		
3000	1140,65	1,3		0,90	**0,45**	0,29	0,25	0,16	0,12	19500	1564		
3000	1259,61	1,2		0,81	**0,41**	0,27	0,23	0,15	0,11	19500	1670		
3000	1489,14	0,97		0,69	**0,34**	0,25	0,19	0,13	0,10	19500	1693		
3000	1675,43	0,87		0,61	**0,31**	0,22	0,17	0,11	0,08	19500	1708		
3000	1897,20	0,76		0,54	**0,27**	0,20	0,15	0,10	0,07	19500	1721		
3000	2313,18	0,63		0,49	**0,25**	0,18	0,14	0,09	0,07	19500	1739		
3000	2736,94	0,53		0,42	**0,21**	0,15	0,12	0,08	0,06	19500	1752		
3000	2850,22	0,51	**MT576**	0,41	**0,20**	0,15	0,11	0,07	0,06	19500	1754	134	339
3000	3372,36	0,43	**NT576**	0,35	**0,17**	0,13	0,10	0,06	0,05	19500	1765	144	
3000	4402,68	0,33		0,27	**0,13**	0,10	0,07	0,05	0,04	19500	1778		
3000	4953,44	0,29		0,26	**0,12**	0,09	0,07	0,04	0,03	19500	1783		
3000	6838,96	0,21		0,19	**0,09**	0,06	0,05	0,03	0,02	19500	1794		
3000	8091,82	0,18		0,16	**0,07**	0,05	0,04	0,03	0,02	19500	1798		
2150	3,29	440	**MT672**	-	**101**	76	62	47	39	8750	-	171	340
2400	3,79	383	**NT672**	-	**99**	74	60	46	38	8825	-	181	
2670	4,37	332		-	**95**	71	58	44	36	8909	-		
2700	4,53	320		-	**93**	70	56	43	35	9023	-		
2920	5,08	285		-	**90**	67	54	42	33	9112	-		
3170	5,73	253		-	**86**	65	52	39	29	9182	-		
2870	6,88	211		-	**65**	49	40	30	24	11622	-		
2920	7,91	183		-	**58**	43	35	27	21	12348	-		
2990	9,13	159		-	**51**	39	31	24	18	13103	-		
3030	9,47	153		-	**50**	38	30	23	18	13256	-		
3090	10,62	137		-	**46**	34	28	21	16	13891	-		
3170	11,97	121		-	**42**	31	25	19	14	14551	-		
3250	13,58	107		-	**38**	28	23	16	12	15290	-		
3350	15,53	93		55	**34**	25	21	14	11	16087	-		
3470	17,93	81		49	**30**	23	18	12	9,5	16969	-		
3580	20,74	70		44	**27**	20	16	11	8,2	17939	-		

Nominal Torques	Ratio	Output Speeds	Type	P_e= Nominal Power [kW] (For Service Factor f_s=1,0)						Radial Loads (Output)	Radial Loads (Input)	Weight	Dim. Page
				Input speed [rpm]									
M_a [Nm] (n_1=1450rpm)	i	n_2 [r.p.m] (n_1=1450rpm)		n_1=2900	n_1=1450	n_1=950	n_1=725	n_1=475	n_1=360	F_{qam} [N] (n_1=1450rpm)	F_{qem} [N] (n_1=1450rpm)	[kg]	
3680	23,18	63	**MT672** **NT672**	40	**25**	19	15	9,6	7,3	18689	-	171 181	340
3530	26,66	54	**MT673**	-	**20**	16	13	8,5	6,4	20248	2575	199	352
3670	30,20	48	**NT673**	-	**19**	15	11	7,5	5,7	21127	2680	209	
3820	34,36	42		-	**18**	13	10	6,6	5,0	22076	2754		
3990	39,30	37		-	**16**	11	8,8	5,8	4,4	23099	2779		
4160	45,29	32		23	**15**	10	7,6	5,0	3,8	24263	2802		
4300	52,68	28		21	**13**	8,6	6,6	4,3	3,3	25671	2882		
4300	53,99	27		20	**13**	8,4	6,4	4,2	3,2	25956	3607		
4300	61,42	24		19	**11**	7,4	5,6	3,7	2,8	26500	3673		
4300	70,26	21		17	**9,8**	6,5	4,9	3,3	2,5	26500	3733		
4300	80,96	18		16	**8,5**	5,6	4,3	2,8	2,2	26500	3788		
4300	94,17	15		14	**7,4**	4,8	3,7	2,4	1,9	26500	3838		
4300	110,55	13		12	**6,3**	4,1	3,2	2,1	1,6	26500	3903		
4300	124,07	12		11	**5,6**	3,7	2,8	1,9	1,4	26500	3931		
4300	149,11	9,7		9,3	**4,7**	3,1	2,4	1,5	1,2	26500	3966		
4300	174,89	8,3		7,9	**4,0**	2,6	2,0	1,3	1,0	26500	3994		
4300	196,61	7,4		7,1	**3,6**	2,3	1,8	1,2	0,89	26500	4011		
4300	215,97	6,7	**MT674**	6,6	**3,3**	2,2	1,6	1,1	0,81	26500	1707	205	341
4300	245,67	5,9	**NT674**	5,8	**2,9**	1,9	1,4	0,95	0,72	26500	1815	215	
4300	281,02	5,2		5,1	**2,5**	1,7	1,3	0,83	0,63	26500	1913		
4300	323,82	4,5		4,4	**2,2**	1,4	1,1	0,72	0,55	26500	2004		
4300	376,69	3,8		3,8	**1,9**	1,2	0,95	0,62	0,47	26500	2088		
4300	442,20	3,3		3,2	**1,6**	1,1	0,80	0,53	0,40	26500	2164		
4300	500,39	2,9		2,9	**1,4**	0,93	0,71	0,47	0,35	26500	2176		
4300	583,04	2,5	**MT675**	2,5	**1,3**	0,82	0,62	0,41	0,31	26500	2037	214	342
4300	673,70	2,2	**NT675**	2,2	**1,1**	0,71	0,54	0,35	0,27	26500	2047	225	
4300	730,46	2,0		2,0	**1,0**	0,65	0,50	0,33	0,28	26500	2053		
4300	874,56	1,7		1,7	**0,84**	0,55	0,42	0,27	0,23	26500	2063		
4300	995,91	1,5		1,5	**0,74**	0,48	0,37	0,27	0,20	26500	2069		
4300	1113,08	1,3		1,3	**0,66**	0,43	0,33	0,24	0,18	26500	2074		
4300	1259,54	1,2		1,2	**0,58**	0,38	0,29	0,21	0,16	26500	2079		
4300	1432,74	1,01		1,0	**0,51**	0,34	0,26	0,19	0,14	26500	2097		
4300	1638,93	0,88		0,90	**0,45**	0,29	0,25	0,16	0,12	26500	2114		
4300	1888,53	0,77		0,78	**0,39**	0,26	0,22	0,14	0,11	26500	2130		
4300	2196,86	0,66		0,67	**0,33**	0,24	0,19	0,12	0,09	26500	2144		
4300	2578,93	0,56		0,57	**0,28**	0,21	0,16	0,10	0,08	26500	2157		
4300	2863,86	0,51	**MT676**	0,52	**0,26**	0,19	0,15	0,10	0,07	26500	2191	217	342
4300	3342,43	0,43	**NT676**	0,50	**0,25**	0,18	0,14	0,09	0,07	26500	2193	229	
4300	3931,45	0,37		0,43	**0,21**	0,15	0,12	0,08	0,06	26500	2196		
4300	4674,12	0,31		0,36	**0,18**	0,13	0,10	0,07	0,05	26500	2198		
4300	5287,12	0,27		0,32	**0,16**	0,12	0,09	0,06	0,04	26500	2199		
4300	6029,17	0,24		0,28	**0,14**	0,10	0,08	0,05	0,04	26500	2200		
4300	7490,08	0,19		0,25	**0,11**	0,08	0,06	0,04	0,03	26500	2202		
4300	8518,13	0,17		0,22	**0,10**	0,07	0,05	0,04	0,03	26500	2203		
4300	9689,49	0,15		0,19	**0,09**	0,06	0,05	0,03	0,02	26500	2206		
4300	11083,95	0,13		0,17	**0,08**	0,06	0,04	0,03	0,02	26500	2210		
4300	12771,99	0,11		0,15	**0,07**	0,05	0,04	0,02	0,02	26500	2213		
4300	14857,21	0,10		0,13	**0,06**	0,04	0,03	0,02	0,02	26500	2215		
4300	17441,07	0,08		0,11	**0,05**	0,04	0,03	0,02	0,01	26500	2218		
3680	4,73	307	**MT772**	-	**121**	91	73	56	46	46915	-	296	343
3990	5,38	269	**NT772**	-	**115**	87	70	54	44	47449	-	365	
4330	6,15	236		-	**110**	82	67	51	42	48003	-		
4490	6,52	222		-	**107**	81	65	50	41	48160	-		
4770	7,26	200		-	**102**	77	62	48	39	48690	-		
6200	8,46	171		-	**114**	87	71	49	37	46092	-		

MT / NT - PERFORMANCE TABLES

Nominal Torques	Ratio	Output Speeds	Type	P_e= Nominal Power [kW] (For Service Factor f_s=1,0)						Radial Loads (Output)	Radial Loads (Input)	Weight	Dim. Page
				Input speed [rpm]									
M_a [Nm] (n_1=1450rpm)	i	n_2 [r.p.m] (n_1=1450rpm)		n_1=2900	n_1=1450	n_1=950	n_1=725	n_1=475	n_1=360	F_{qam} [N] (n_1=1450rpm)	F_{qem} [N] (n_1=1450rpm)	[kg]	
6470	9,62	151	**MT772**	-	**105**	80	65	43	33	47757	-	296	343
6770	11,00	132	**NT772**	-	**96**	73	57	38	29	49515	-	365	
6900	11,65	124		-	**93**	70	54	35	27	50302	-		
7140	12,98	112		-	**86**	63	48	32	24	51890	-		
7420	14,54	100		-	**80**	57	43	28	22	53475	-		
7710	16,39	88		-	**74**	50	38	25	19	51626	-		
7520	17,40	83	**MT773**	-	**68**	48	37	24	18	52000	-	259	343
7810	19,52	74	**NT773**	-	**63**	43	33	21	16	50500	-	320	
8000	22,62	64		-	**56**	37	28	19	14	48500	-		
8000	25,99	56		-	**49**	32	25	16	12	48500	-		
8000	30,00	48		-	**42**	28	21	14	11	48500	-		
8000	31,11	47		-	**41**	27	21	14	10	48500	-		
8000	34,89	42		-	**36**	24	18	12	9,2	48500	-		
8000	39,33	37		-	**32**	21	16	11	8,1	48500	-		
8000	44,17	33		-	**29**	19	15	9,5	7,3	48500	4355		
8000	50,75	29		-	**25**	17	13	8,3	6,3	48500	4494		
8000	58,59	25		-	**22**	14	11	7,2	5,5	48500	4619		
8000	60,76	24		-	**21**	14	11	7,0	5,3	48500	4629		
8000	68,15	21		-	**19**	12	9,4	6,2	4,7	48500	4714		
8000	76,81	19		-	**17**	11	8,4	5,5	4,2	48500	4792		
8000	87,13	17		-	**15**	9,7	7,4	4,9	3,7	48500	4865		
8000	99,63	15		26	**13**	8,5	6,5	4,3	3,2	48500	1932		
8000	115,06	13		22	**11**	7,4	5,6	3,7	2,8	48500	1995		
8000	133,05	11		19	**9,7**	6,4	4,9	3,2	2,4	48500	5070		
8000	148,73	9,7		17	**8,7**	5,7	4,4	2,9	2,2	48500	5106		
8000	178,78	8,1		14	**7,2**	4,8	3,6	2,4	1,8	48500	5159		
8000	208,82	6,9		12	**6,2**	4,1	3,1	2,1	1,6	48500	5195		
8000	190,96	7,6	**MT774**	14	**6,9**	4,5	3,4	2,3	1,7	48500	-	269	344
8000	214,17	6,8	**NT774**	12	**6,1**	4,0	3,1	2,0	1,5	48500	-	330	
8000	241,42	6,0		11	**5,5**	3,6	2,7	1,8	1,4	48500	546		
8000	273,85	5,3		9,6	**4,8**	3,2	2,4	1,6	1,2	48500	1188		
8000	313,11	4,6		8,4	**4,2**	2,8	2,1	1,4	1,1	48500	1634		
8000	361,62	4,0		7,3	**3,7**	2,4	1,8	1,2	0,91	48500	1764		
8000	418,17	3,5		6,3	**3,2**	2,1	1,6	1,0	0,78	48500	1877		
8000	467,43	3,1		5,7	**2,8**	1,9	1,4	0,93	0,70	48500	1953		
8000	532,29	2,7		5,0	**2,5**	1,6	1,2	0,82	0,62	48500	1976		
8000	594,92	2,4		4,5	**2,2**	1,5	1,1	0,73	0,55	48500	1997		
8000	641,40	2,3	**MT775**	4,2	**2,1**	1,4	1,1	0,69	0,52	48500	1721	328	345
8000	725,80	2,0	**NT775**	3,7	**1,9**	1,2	0,94	0,61	0,46	48500	1736	400	
8000	822,02	1,8		3,3	**1,7**	1,1	0,82	0,54	0,41	48500	1935		
8000	984,18	1,5		2,8	**1,4**	0,90	0,69	0,45	0,34	48500	1952		
8000	1120,74	1,3		2,4	**1,2**	0,80	0,61	0,40	0,30	48500	1962		
8000	1252,60	1,2		2,2	**1,1**	0,71	0,54	0,36	0,27	48500	1971		
8000	1417,41	1,0		1,9	**0,96**	0,63	0,48	0,32	0,27	48500	1978		
8000	1589,68	0,91		1,7	**0,86**	0,56	0,43	0,28	0,24	48500	2006		
8000	1791,91	0,81		1,5	**0,76**	0,50	0,38	0,28	0,21	48500	2031		
8000	2032,66	0,71		1,4	**0,67**	0,44	0,34	0,24	0,19	48500	2055		
8000	2324,10	0,62		1,2	**0,59**	0,39	0,29	0,21	0,16	48500	2077		
8000	2684,10	0,54		1,0	**0,51**	0,33	0,26	0,19	0,14	48500	2098		
8000	3103,85	0,47		0,88	**0,44**	0,29	0,24	0,16	0,12	48500	2116		
8000	3814,39	0,38		0,72	**0,36**	0,26	0,20	0,13	0,10	48500	2121		
8000	4263,81	0,34		0,64	**0,32**	0,23	0,18	0,12	0,09	48500	2133		
8000	4812,09	0,30		0,57	**0,29**	0,21	0,16	0,10	0,08	48500	2135		
8000	2916,59	0,50	**MT776**	0,96	**0,48**	0,31	0,27	0,17	0,13	48500	2160	332	345
8000	3222,83	0,45	**NT776**	0,87	**0,43**	0,28	0,24	0,16	0,12	48500	2164	405	
8000	3761,39	0,39		0,74	**0,37**	0,27	0,21	0,14	0,10	48500	2168		

Nominal Torques	Ratio	Output Speeds	Type	P_e= Nominal Power [kW] (For Service Factor f_s=1,0)						Radial Loads (Output)	Radial Loads (Input)	Weight	Dim. Page
				Input speed [rpm]									
M_a [Nm] (n_1=1450rpm)	i	n_2 [r.p.m] (n_1=1450rpm)		n_1=2900	n_1=1450	n_1=950	n_1=725	n_1=475	n_1=360	F_{qam} [N] (n_1=1450rpm)	F_{qem} [N] (n_1=1450rpm)	[kg]	
8000	4424,24	0,33	**MT776**	0,63	**0,32**	0,23	0,18	0,12	0,09	48500	2172	332	345
8000	5260,00	0,28	**NT776**	0,53	**0,27**	0,19	0,15	0,10	0,07	48500	2175	405	
8000	5949,83	0,24		0,52	**0,26**	0,19	0,15	0,10	0,07	48500	2177		
8000	6784,90	0,21		0,46	**0,23**	0,17	0,13	0,08	0,06	48500	2179		
8000	8428,93	0,17		0,37	**0,19**	0,14	0,10	0,07	0,05	48500	2182		
8000	9585,84	0,15		0,33	**0,16**	0,12	0,09	0,06	0,05	48500	2184		
8000	10750,89	0,13		0,29	**0,15**	0,11	0,08	0,05	0,04	48500	2189		
8000	12118,56	0,12		0,26	**0,13**	0,09	0,07	0,05	0,04	48500	2194		
8000	13746,73	0,11		0,25	**0,11**	0,08	0,06	0,04	0,03	48500	2198		
8000	15717,68	0,09		0,22	**0,10**	0,07	0,06	0,04	0,03	48500	2203		
8000	18152,38	0,08		0,19	**0,09**	0,06	0,05	0,03	0,02	48500	2207		
8000	20991,08	0,07		0,17	**0,07**	0,05	0,04	0,03	0,02	48500	2210		
8000	23464,25	0,06		0,15	**0,07**	0,05	0,04	0,02	0,02	48500	2212		
8700	4,32	336	**MT872**	-	**319**	238	192	146	118	57369	-	550	346
9000	4,95	293	**NT872**	-	**287**	215	173	133	103	59951	-	560	
9550	5,22	278		-	**289**	216	175	129	98	42712	-		
9900	5,99	242		-	**261**	196	158	112	85	44736	-		
10200	6,64	218		-	**243**	182	146	101	77	46180	-		
10600	7,55	192		-	**222**	166	133	89	68	48005	-		
11200	8,87	163		-	**200**	149	116	76	58	75086	-		
11500	10,09	144		-	**180**	134	102	67	51	78329	-		
12700	11,59	125	**MT873**	-	**177**	119	91	59	45	74662	-	555	346
13000	13,30	109	**NT873**	-	**158**	103	79	52	39	72000	-	565	
13000	14,02	103		-	**150**	98	75	49	37	56769	-		
13000	16,09	90		-	**131**	86	65	43	32	61500	-		
13000	17,83	81		-	**118**	77	59	39	29	65164	-		
13000	20,28	72		-	**104**	68	52	34	26	69914	-		
13000	23,87	61		-	**88**	58	44	29	22	72000	-		
13000	27,39	53		-	**77**	50	38	25	19	72000	-		
13000	30,36	48		-	**69**	45	35	23	17	72000	-		
13000	34,53	42		-	**61**	40	30	20	15	72000	-		
13000	40,55	36		-	**52**	34	26	17	13	72000	570		
13000	46,12	31		-	**46**	30	23	15	11	72000	1722		
13000	52,86	27		-	**40**	26	20	13	9,9	72000	2253		
13000	56,54	26		74	**37**	24	19	12	9,2	72000	-		
13000	64,77	22		65	**32**	21	16	11	8,1	72000	-		
13000	75,51	19		56	**28**	18	14	9,1	6,9	72000	3485		
13000	86,51	17		49	**24**	16	12	8,0	6,0	72000	3895		
13000	99,81	15		42	**21**	14	11	6,9	5,2	72000	4492		
13000	110,17	13		38	**19**	12	9,5	6,2	4,7	72000	4631		
13000	107,60	13	**MT874**	39	**20**	13	9,9	6,5	4,9	72000	569	590	347
13000	125,70	12	**NT874**	34	**17**	11	8,5	5,5	4,2	72000	1172	600	
13000	147,61	9,8		29	**14**	9,5	7,2	4,7	3,6	72000	1704		
13000	174,68	8,3		24	**12**	8,0	6,1	4,0	3,0	72000	2176		
13000	188,08	7,7		23	**11**	7,4	5,7	3,7	2,8	72000	2568		
13000	211,60	6,9		20	**10**	6,6	5,0	3,3	2,5	72000	2638		
13000	239,61	6,1		18	**8,9**	5,8	4,5	2,9	2,2	72000	2697		
13000	292,15	5,0		15	**7,3**	4,8	3,7	2,4	1,8	72000	2774		
13000	345,67	4,2		12	**6,2**	4,1	3,1	2,0	1,5	72000	2831		
13000	390,74	3,7		11	**5,5**	3,6	2,8	1,8	1,4	72000	2867		
13000	446,42	3,2		9,6	**4,8**	3,2	2,4	1,6	1,2	72000	2901		
13000	495,97	2,9	**MT875**	8,9	**4,4**	2,9	2,2	1,5	1,1	72000	1470	618	348
13000	537,75	2,7	**NT875**	8,2	**4,1**	2,7	2,0	1,3	1,0	72000	1494	628	
13000	643,84	2,3		6,8	**3,4**	2,2	1,7	1,1	0,85	72000	1535		
13000	718,74	2,0		6,1	**3,1**	2,0	1,5	1,0	0,76	72000	1607		
13000	807,91	1,8		5,5	**2,7**	1,8	1,4	0,89	0,68	72000	1676		
13000	915,85	1,6		4,8	**2,4**	1,6	1,2	0,79	0,60	72000	1742		

MT / NT - PERFORMANCE TABLES

Nominal Torques	Ratio	Output Speeds	Type	P_e= Nominal Power [kW] (For Service Factor f_s=1,0)						Radial Loads (Output)	Radial Loads (Input)	Weight	Dim. Page
				Input speed [rpm]									
M_a [Nm] (n_1=1450rpm)	i	n_2 [r.p.m] (n_1=1450rpm)		n_1=2900	n_1=1450	n_1=950	n_1=725	n_1=475	n_1=360	F_{qam} [N] (n_1=1450rpm)	F_{qem} [N] (n_1=1450rpm)	[kg]	
13000	1049,18	1,4	**MT875**	4,2	**2,1**	1,4	1,1	0,69	0,52	72000	1804	618	348
13000	1210,51	1,2	**NT875**	3,6	**1,8**	1,2	0,91	0,60	0,45	72000	1861	628	
13000	1336,15	1,1		3,3	**1,7**	1,1	0,83	0,54	0,41	72000	1896		
13000	1521,55	0,95		2,9	**1,5**	0,95	0,73	0,48	0,36	72000	1908		
13000	1700,56	0,85		2,6	**1,3**	0,85	0,65	0,43	0,32	72000	1919		
13000	1924,32	0,75		2,3	**1,2**	0,75	0,58	0,38	0,29	72000	1928		
13000	2108,33	0,69	**MT876**	2,1	**1,1**	0,70	0,54	0,35	0,27	72000	2061	620	348
13000	2460,65	0,59	**NT876**	1,8	**0,92**	0,60	0,46	0,30	0,25	72000	2072	630	
13000	2894,28	0,50		1,6	**0,78**	0,51	0,39	0,26	0,22	72000	2082		
13000	3441,02	0,42		1,3	**0,66**	0,43	0,33	0,24	0,18	72000	2090		
13000	3892,30	0,37		1,2	**0,58**	0,38	0,29	0,21	0,16	72000	2096		
13000	4438,59	0,33		1,0	**0,51**	0,34	0,26	0,19	0,14	72000	2101		
13000	4954,95	0,29		0,92	**0,46**	0,30	0,26	0,17	0,13	72000	2114		
13000	5569,66	0,26		0,82	**0,41**	0,27	0,23	0,15	0,11	72000	2127		
13000	6313,78	0,23		0,72	**0,36**	0,26	0,20	0,13	0,10	72000	2140		
13000	7233,00	0,20		0,63	**0,32**	0,23	0,18	0,12	0,09	72000	2152		
13000	8345,18	0,17		0,55	**0,27**	0,20	0,15	0,10	0,08	72000	2162		
13000	11443,34	0,13		0,44	**0,22**	0,16	0,12	0,08	0,06	72000	2172		
13000	13014,00	0,11		0,39	**0,20**	0,14	0,11	0,07	0,05	72000	2174		
13000	14977,32	0,10		0,34	**0,17**	0,12	0,09	0,06	0,05	72000	2176		
13000	17501,59	0,08		0,29	**0,15**	0,11	0,08	0,05	0,04	72000	2177		
9950	7,11	204	**MT972**	-	**217**	163	131	101	83	94943	23900	960	349
10700	7,92	183	**NT972**	-	**210**	157	127	97	80	97294	20793	1010	
11450	8,86	164		-	**201**	151	122	94	77	99973	15969		
12350	9,99	145		-	**192**	144	116	89	70	102771	9691		
18000	11,56	125		-	**243**	159	122	80	61	94500	11034		
18000	12,86	113		-	**218**	143	110	72	55	94500	15627		
18000	14,40	101		-	**195**	128	98	64	49	94500	19933		
18000	16,23	89		-	**173**	114	87	57	43	94500	23900		
18000	18,15	80	**MT973**	-	**156**	102	78	52	39	94500	23900	1000	349
18000	20,36	71	**NT973**	-	**139**	91	70	46	35	94500	23900	1050	
18000	22,95	63		-	**123**	81	62	41	31	94500	23900		
18000	26,03	56		-	**109**	72	55	36	27	94500	23900		
18000	29,49	49		-	**96**	63	48	32	24	94500	23900		
18000	33,08	44		-	**86**	57	43	28	22	94500	23900		
18000	37,29	39		-	**76**	50	38	25	19	94500	23900		
18000	42,30	34		-	**67**	44	34	22	17	94500	23900		
18000	48,86	30		-	**58**	38	29	19	15	94500	23900		
18000	54,80	26		-	**52**	34	26	17	13	94500	23900		
18000	61,77	23		-	**46**	30	23	15	12	94500	23900		
18000	70,07	21		-	**41**	27	21	14	10	94500	23900		
18000	82,20	18		-	**35**	23	18	12	8,8	94500	23900		
18000	91,56	16		-	**31**	21	16	10	7,9	94500	23900		
18000	102,69	14		-	**28**	18	14	9,3	7,1	94500	23900		
18000	116,17	12		-	**25**	16	13	8,2	6,2	94500	23900		
18000	132,83	11		43	**22**	14	11	7,2	5,5	94500	23900		
18000	150,02	9,7		38	**19**	13	9,7	6,4	4,8	94500	23900		
18000	166,73	8,7		35	**17**	11	8,7	5,8	4,4	94500	23900		
18000	186,95	7,8		31	**16**	10	7,8	5,1	3,9	94500	23900		
18000	172,08	8,4	**MT974**	34	**17**	11	8,5	5,6	4,2	94500	-	1050	350
18000	193,13	7,5	**NT974**	30	**15**	10	7,6	5,0	3,8	94500	333	1100	
18000	216,03	6,7		27	**14**	8,9	6,8	4,5	3,4	94500	496		
18000	272,24	5,3		22	**11**	7,1	5,4	3,6	2,7	94500	1009		
18000	305,33	4,7		19	**9,7**	6,3	4,8	3,2	2,4	94500	2129		
18000	344,17	4,2		17	**8,6**	5,6	4,3	2,8	2,1	94500	3134		
18000	390,41	3,7		15	**7,6**	5,0	3,8	2,5	1,9	94500	3339		
18000	457,99	3,2		13	**6,5**	4,2	3,2	2,1	1,6	94500	3565		

Nominal Torques	Ratio	Output Speeds	Type	P_e= Nominal Power [kW] (For Service Factor f_s=1,0)						Radial Loads (Output)	Radial Loads (Input)	Weight	Dim. Page
				Input speed [rpm]									
M_a [Nm] (n_1=1450rpm)	i	n_2 [r.p.m] (n_1=1450rpm)		n_1=2900	n_1=1450	n_1=950	n_1=725	n_1=475	n_1=360	F_{qam} [N] (n_1=1450rpm)	F_{qem} [N] (n_1=1450rpm)	[kg]	
18000	510,11	2,8	**MT974** **NT974**	11	**5,6**	3,6	3,0	1,8	1,4	94500	3755	1050 1100	350
18000	462,18	3,1	**MT975**	13	**6,5**	4,3	3,3	2,1	1,6	94500	1743	1100	351
18000	546,94	2,7	**NT975**	11	**5,5**	3,6	2,8	1,8	1,4	94500	1801	1150	
18000	588,87	2,5		10	**5,1**	3,4	2,6	1,7	1,3	94500	1844		
18000	662,54	2,2		9,1	**4,6**	3,0	2,3	1,5	1,1	94500	1876		
18000	750,24	1,9		8,1	**4,0**	2,7	2,0	1,3	1,0	94500	1905		
18000	842,80	1,7		7,2	**3,6**	2,4	1,8	1,2	0,90	94500	1922		
18000	914,74	1,6		6,6	**3,3**	2,2	1,7	1,1	0,82	94500	1943		
18000	1082,31	1,3		5,6	**2,8**	1,8	1,4	0,92	0,70	94500	1971		
18000	1213,85	1,2		5,0	**2,5**	1,7	1,3	0,82	0,62	94500	2040		
18000	1368,27	1,1		4,5	**2,2**	1,5	1,1	0,73	0,55	94500	2103		
18000	1552,10	0,93		3,9	**2,0**	1,3	0,98	0,64	0,49	94500	2162		
18000	1820,78	0,80		3,4	**1,7**	1,1	0,84	0,55	0,42	94500	2226		
18000	2027,97	0,71		3,0	**1,5**	0,99	0,75	0,49	0,37	94500	2265		
18000	2836,64	0,51	**MT976**	2,2	**1,1**	0,72	0,55	0,36	0,27	94500	2396	1105	351
18000	3594,81	0,40	**NT976**	1,7	**0,87**	0,57	0,43	0,28	0,24	94500	2411	1155	
18000	4227,50	0,34		1,5	**0,74**	0,48	0,37	0,27	0,20	94500	2463		
18000	4474,67	0,32		1,4	**0,70**	0,46	0,35	0,25	0,19	94500	2466		
18000	5357,43	0,27		1,2	**0,59**	0,38	0,29	0,21	0,16	94500	2473		
18000	6842,29	0,21		0,92	**0,46**	0,30	0,26	0,17	0,13	94500	2491		
18000	8620,11	0,17		0,73	**0,36**	0,27	0,20	0,13	0,10	94500	2506		
18000	11064,86	0,13		0,57	**0,28**	0,21	0,16	0,10	0,08	94500	2520		
18000	15951,72	0,09		0,44	**0,22**	0,16	0,12	0,08	0,06	94500	2535		
18000	20051,59	0,07		0,35	**0,18**	0,13	0,10	0,06	0,05	94500	2542		

DANA BREVINI®
Motion Systems

DIMENSION PAGES

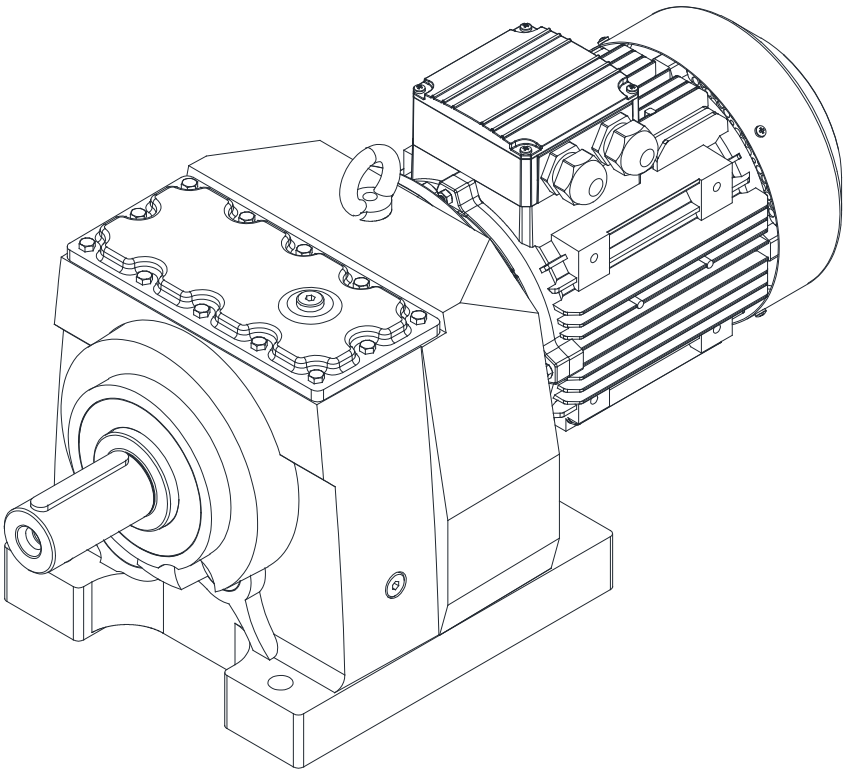

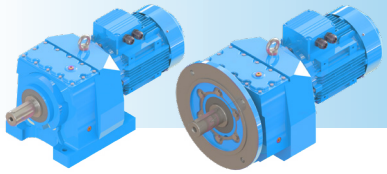

MR / NR - DIMENSION PAGES

MR002
MR003

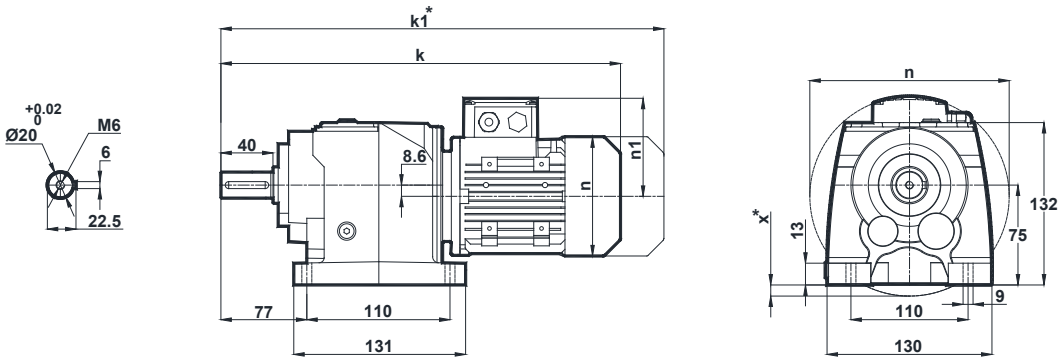

NR002
NR003

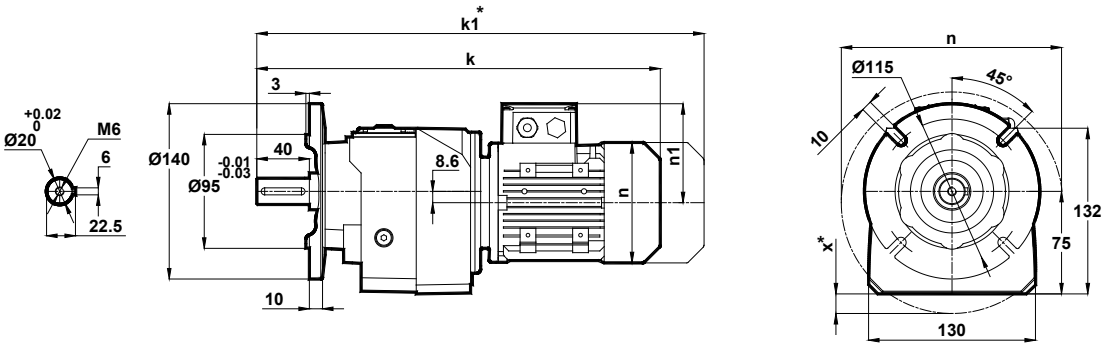

Motor Size					
	63	71	80	90S	90L
k	368.5	397	431	470	470
k1	429.5	488	524	573.5	573.5
n	121	137	155	176	176
n1	97	112	121	132	132
x	-	3	12	22	22

Terminal Box

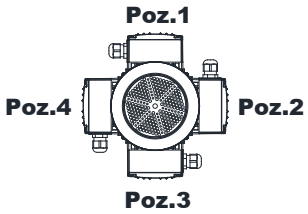

63-71-80-90

Optional Flange Dimensions

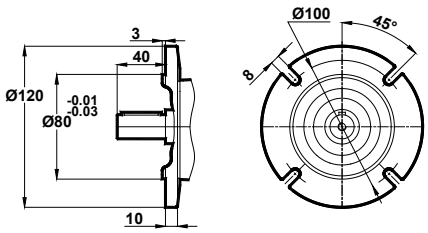

Opt. 1

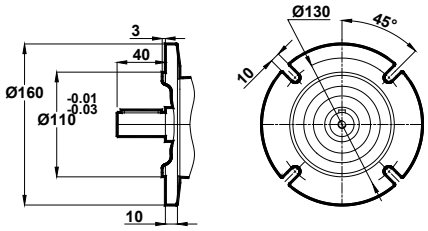

Opt. 2

*Dimension " k1" is for motors with brake.
x: If Motor is lower than foot mounting plane

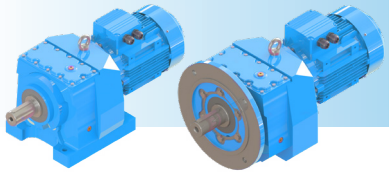

MR102
MR103

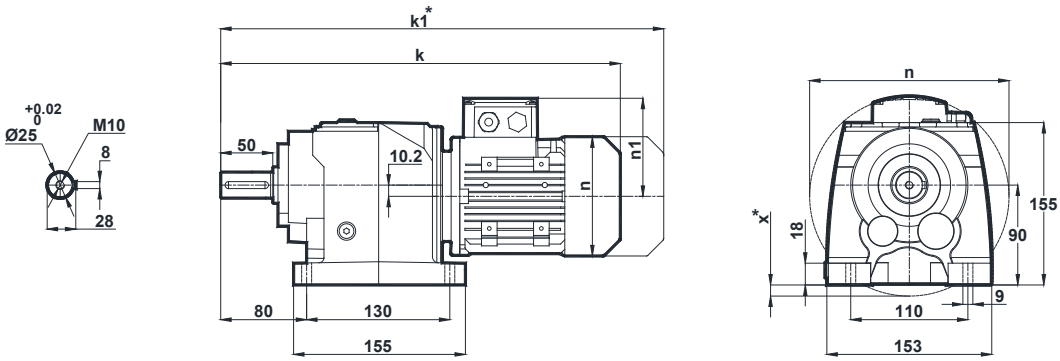

NR102
NR103

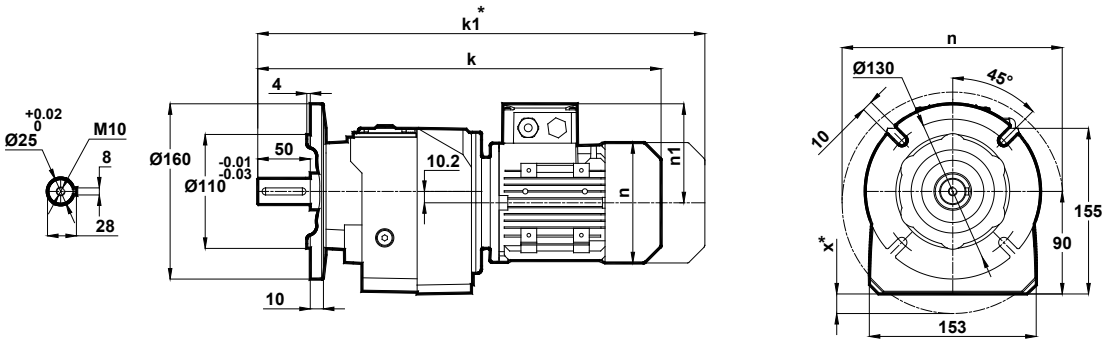

Motor Size					
	63	71	80	90S	90L
k	398	424	458	497	497
k1	459	515	551	600.5	600.5
n	121	137	155	176	176
n1	97	112	121	132	132
x	-	-	-	9	9

Terminal Box

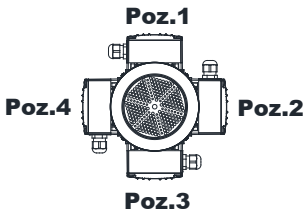

63-71-80-90

Optional Flange Dimensions

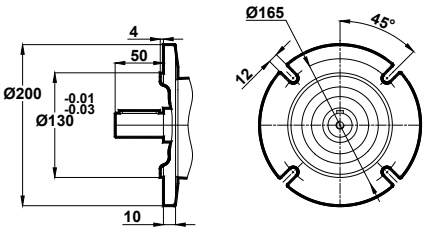

Opt. 1

*Dimension " k1" is for motors with brake.
x: If Motor is lower than foot mounting plane

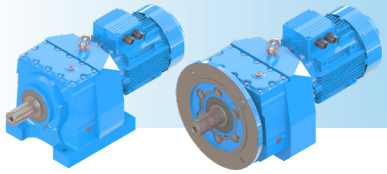

MR / NR - DIMENSION PAGES

MR172
MR173

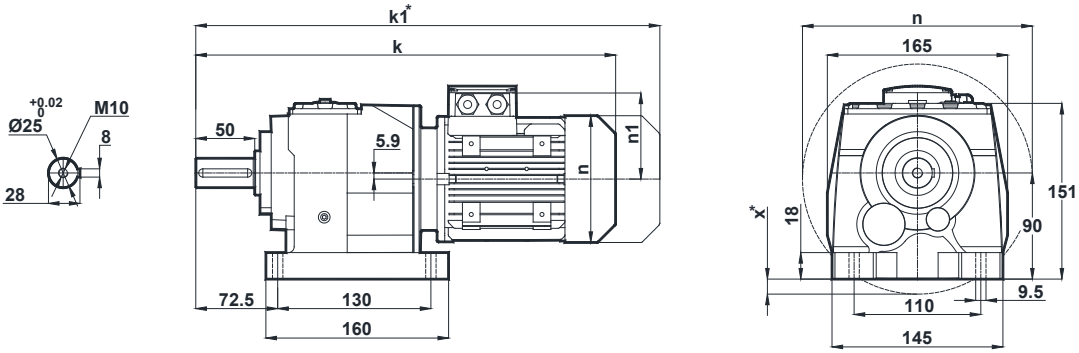

NR172
NR173

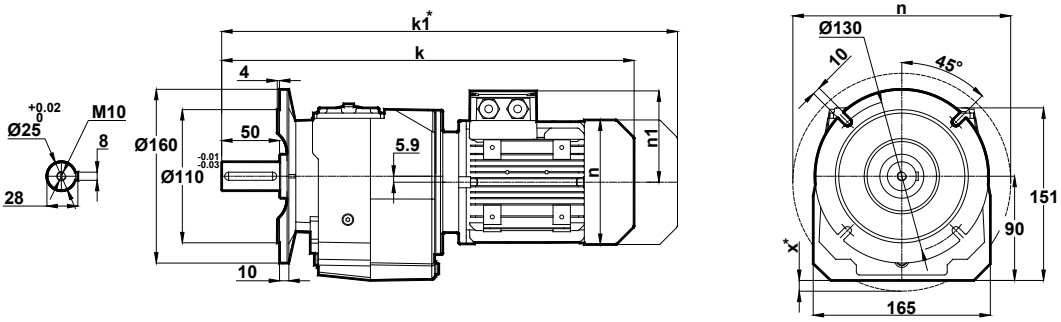

Motor Size							
	63	71	80	90S	90L	100L	112M
k	395.5	424	458	497	497	545	569
k1	456.5	515	551	600.5	600.5	653.5	673.5
n	121	137	155	176	176	193	215
n1	97	112	121	132	132	147	158
x	-	-	-	4	4	13	24

Terminal Box

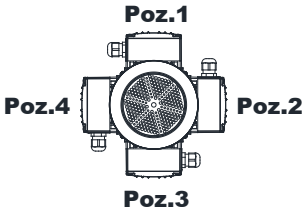

63-71-80-90-100-112

Optional Flange Dimensions

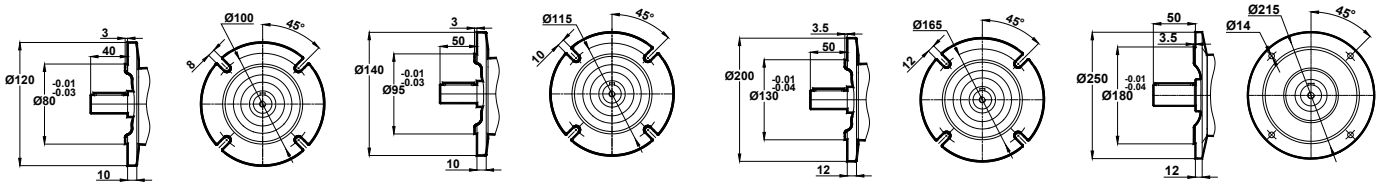

Opt. 1 **Opt. 2** **Opt. 3** **Opt. 4**

*Dimension " k1" is for motors with brake.
x: If Motor is lower than foot mounting plane

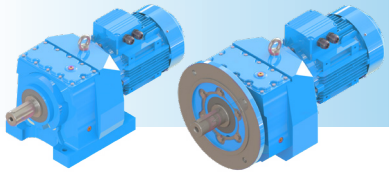

MR202
MR203

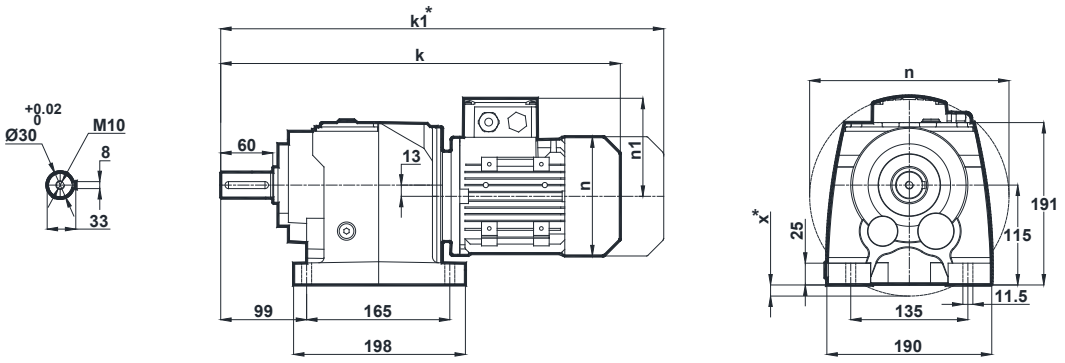

NR202
NR203

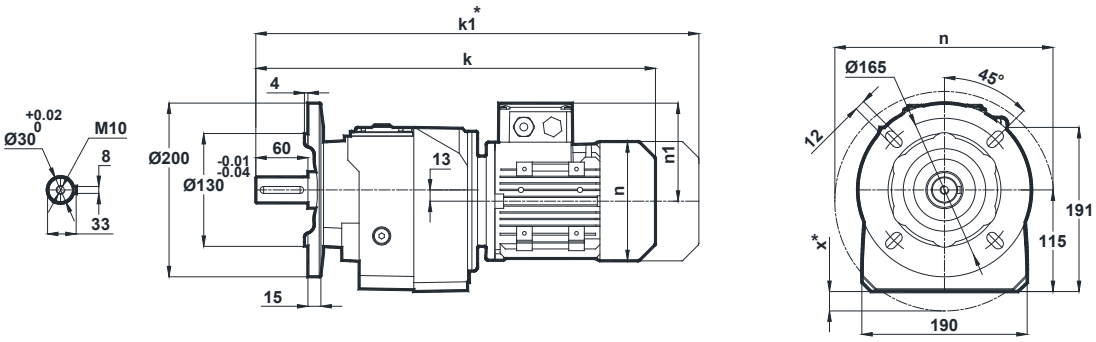

Motor Size							
	63	71	80	90S	90L	100L	112M
k	443	470	504	543	543	591	615
k1	504	561	597	646.5	646.5	699.5	719.5
n	121	137	155	176	176	193	215
n1	97	112	121	132	132	147	158
x	-	-	-	-	-	-	6

Terminal Box

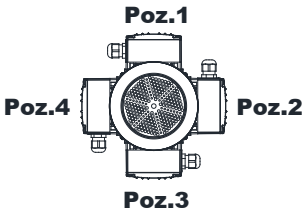

63-71-80-90-100-112

Optional Flange Dimensions

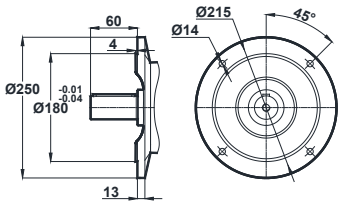

Opt. 1

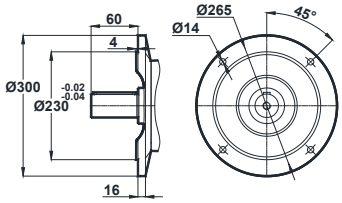

Opt. 2

*Dimension " k1" is for motors with brake.
x: If Motor is lower than foot mounting plane

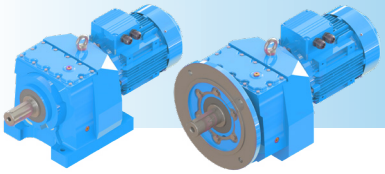

MR / NR - DIMENSION PAGES

MR272
MR273

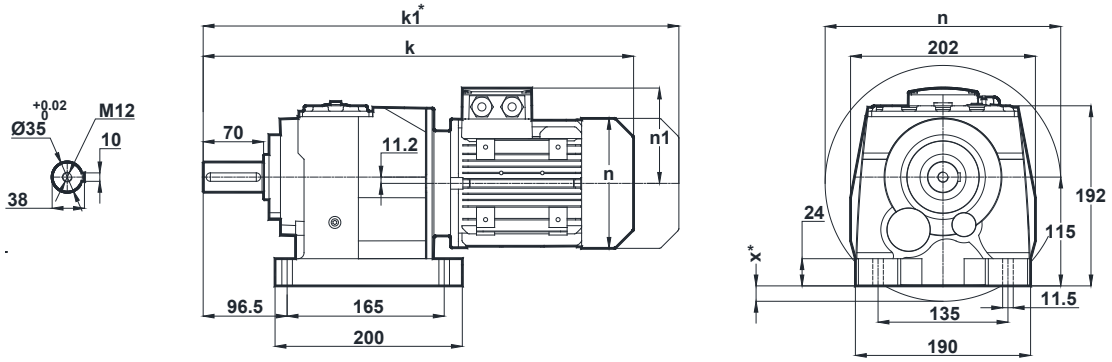

NR272
NR273

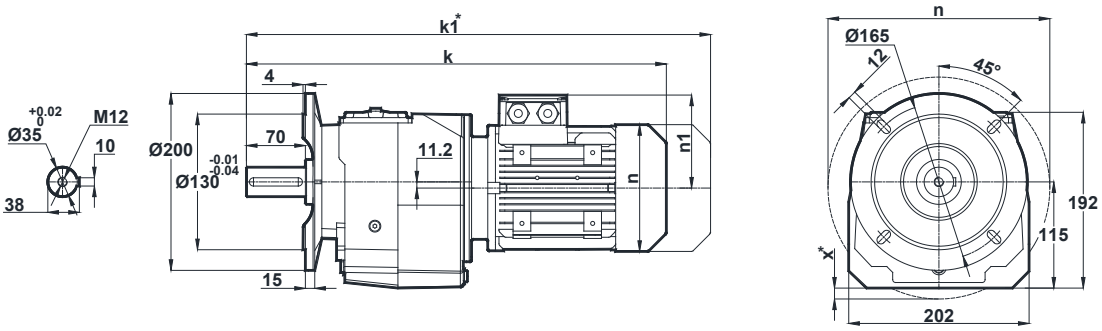

Motor Size									
	63	71	80	90S	90L	100L	112M	132S	132M
k	444	471	505	544	544	592	616	699	699
k1	505	562	598	647.5	647.5	700.5	720.5	829	829
n	121	137	155	176	176	193	215	257	257
n1	97	112	121	132	132	147	158	179	179
x	-	-	-	-	-	-	4	25	25

Terminal Box

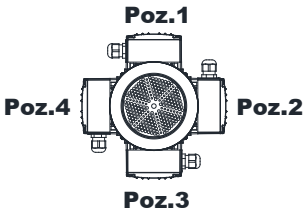

63-71-80-90-100-112-132

Optional Flange Dimensions

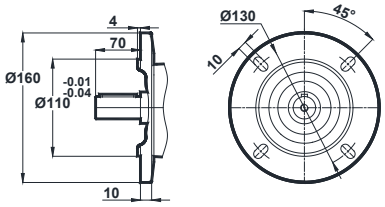

Opt. 1

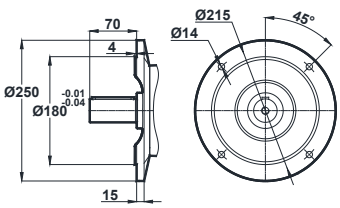

Opt. 2

*Dimension " k1" is for motors with brake.
x: If Motor is lower than foot mounting plane

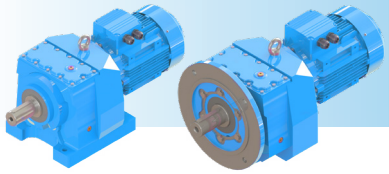

MR275
MR276

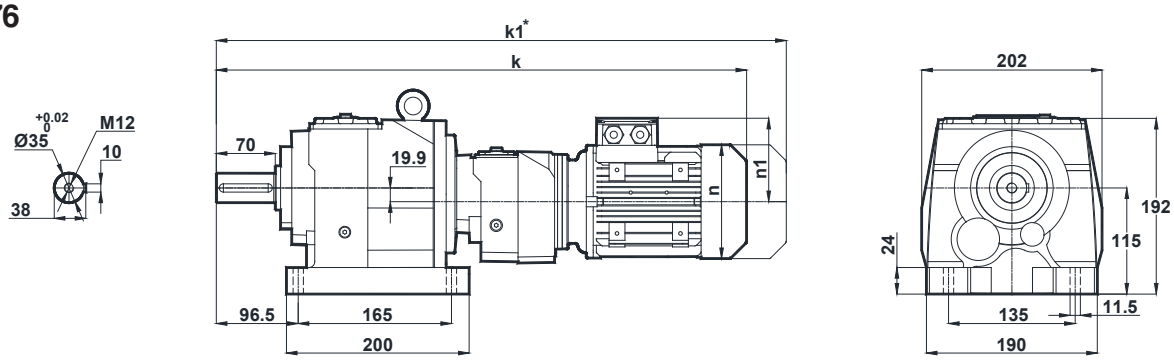

NR275
NR276

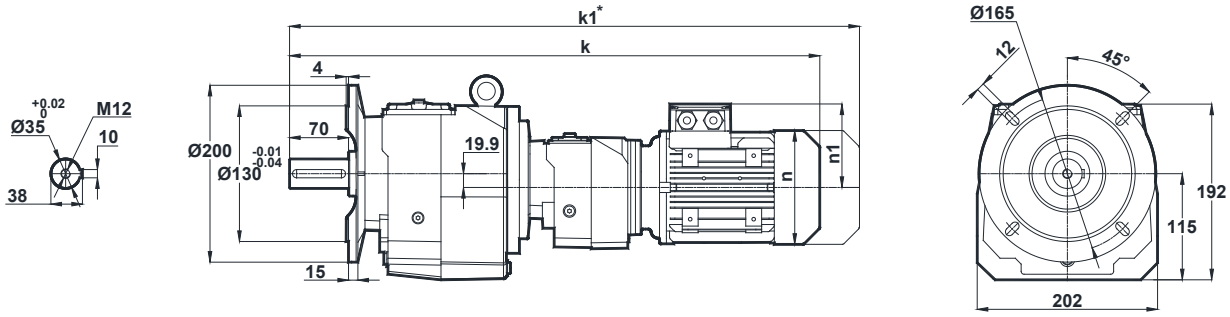

Motor Size		
	63	71
k	593.5	622
k1	654.5	713
n	121	137
n1	97	112

Terminal Box

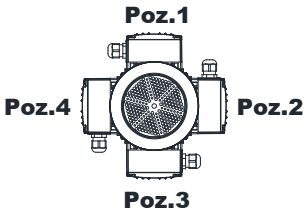

63-71

Optional Flange Dimensions

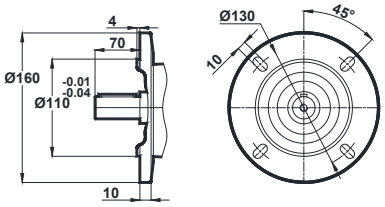

Opt. 1

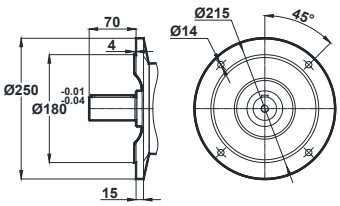

Opt. 2

*Dimension " k1" is for motors with brake.

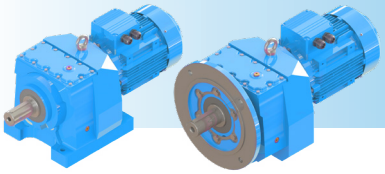

MR / NR - DIMENSION PAGES

MR282
MR283

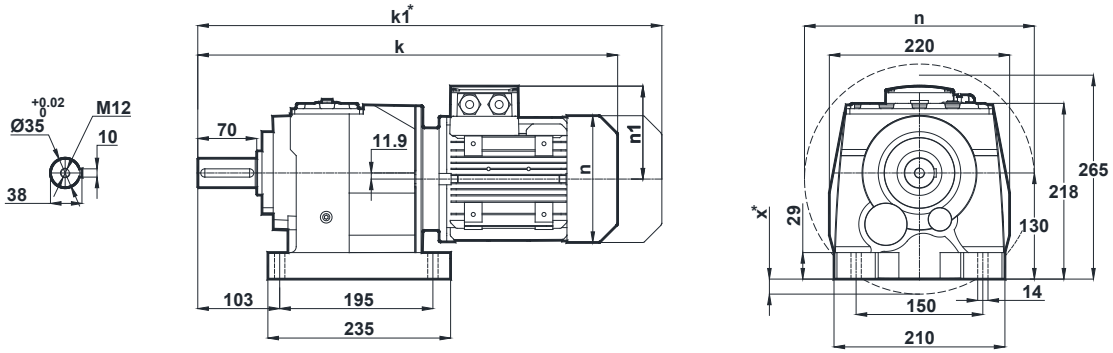

NR282
NR283

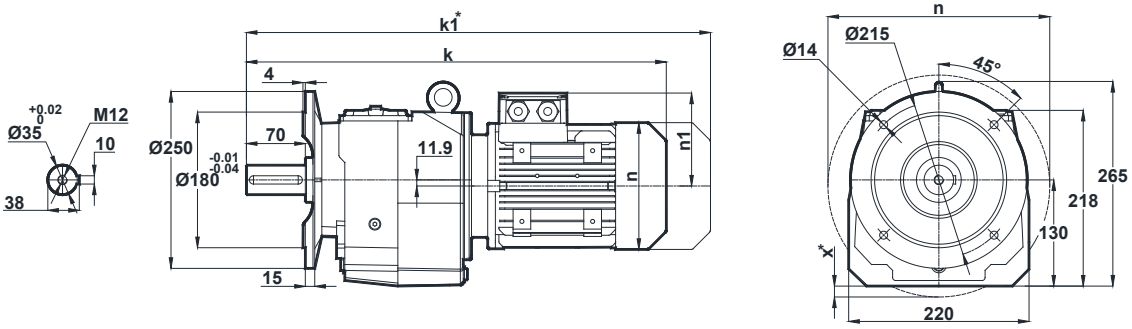

Motor Size								
	71	80	90S	90L	100L	112M	132S	132M
k	488.5	522.5	561.5	561.5	609.5	633.5	720	720
k1	579.5	615.5	665	665	718	738	850	850
n	137	155	176	176	193	215	257	257
n1	112	121	132	132	147	158	179	179
x	-	-	-	-	-	-	11	11

Terminal Box

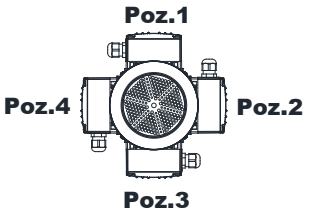

71-80-90-100-112-132

Optional Flange Dimensions

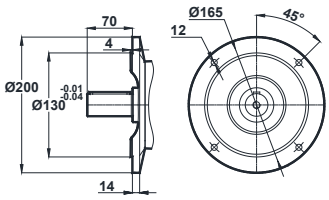

Opt. 1

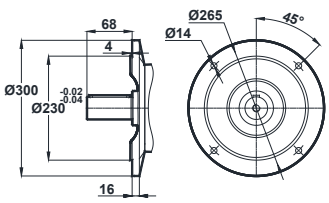

Opt. 2

*Dimension " k1" is for motors with brake.
x: If Motor is lower than foot mounting plane

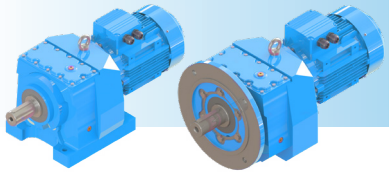

MR284

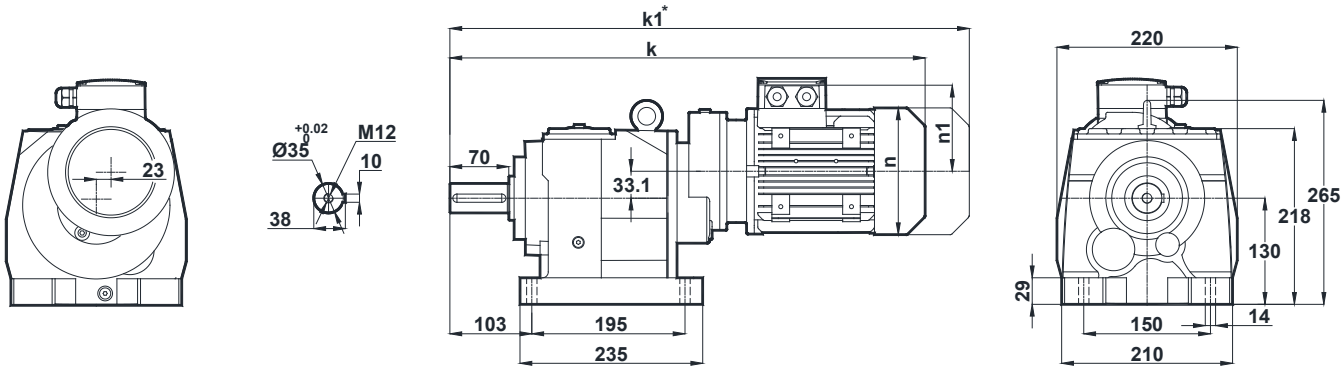

NR284

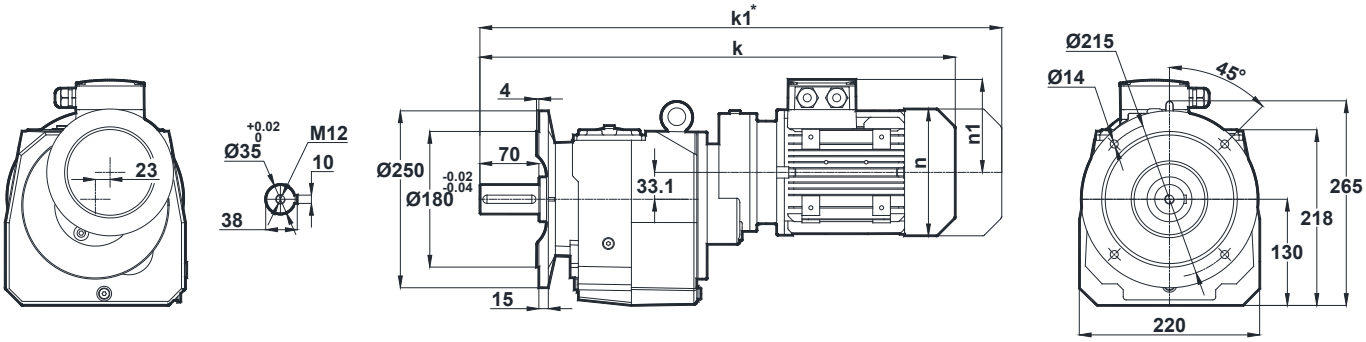

Motor Size		
	63	71
k	540.5	567.5
k1	601.5	658.5
n	121	137
n1	97	112

Terminal Box

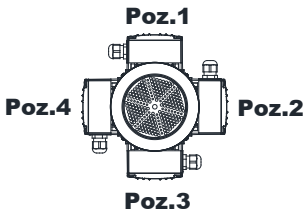

63-71

Optional Flange Dimensions

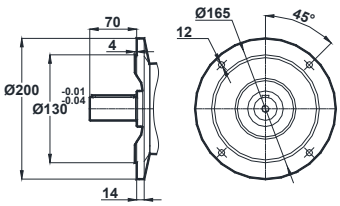

Opt. 1

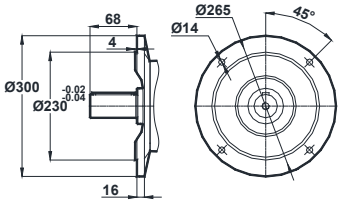

Opt. 2

*Dimension " k1" is for motors with brake.

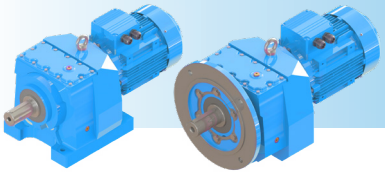

MR / NR - DIMENSION PAGES

MR285
MR286

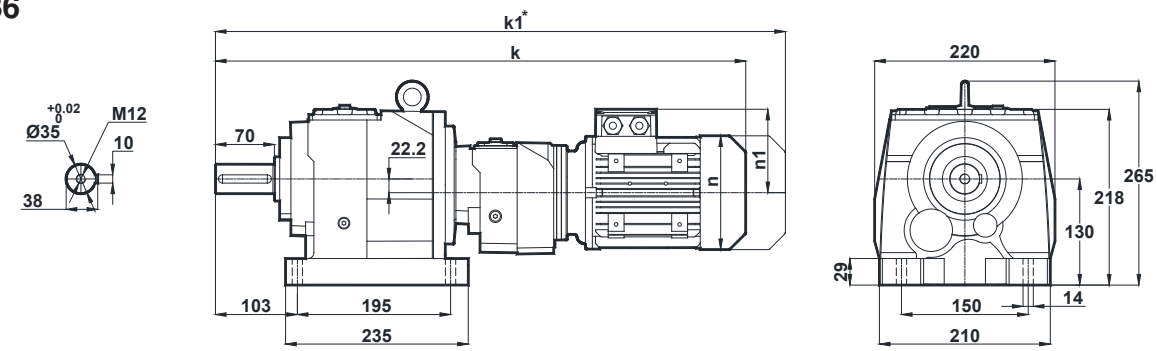

NR285
NR286

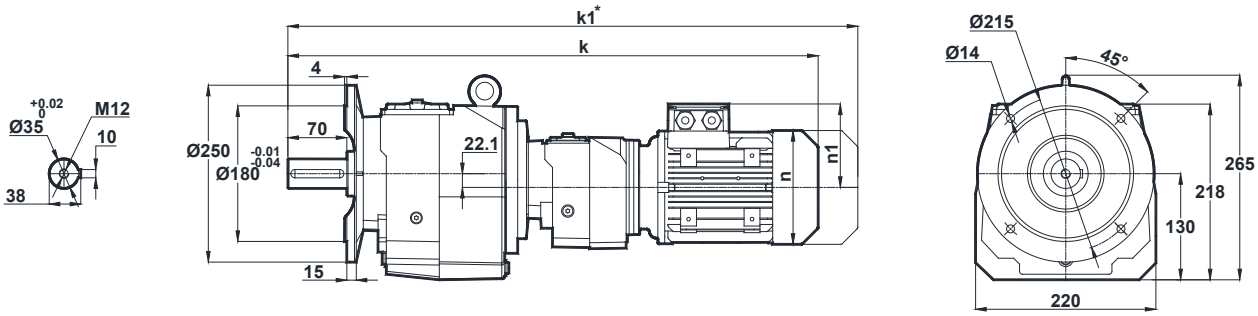

Motor Size	
	63
k	645
k1	706
n	121
n1	97

Terminal Box

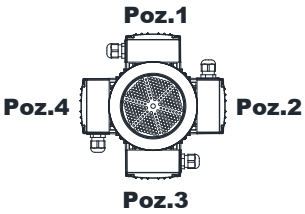

63

Optional Flange Dimensions

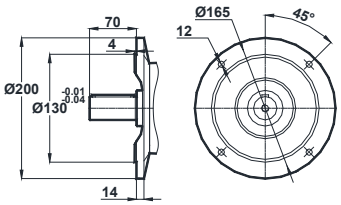

Opt. 1

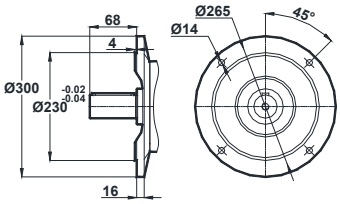

Opt. 2

*Dimension " k1" is for motors with brake.

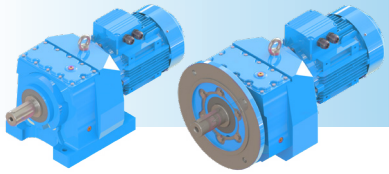

MR372
MR373

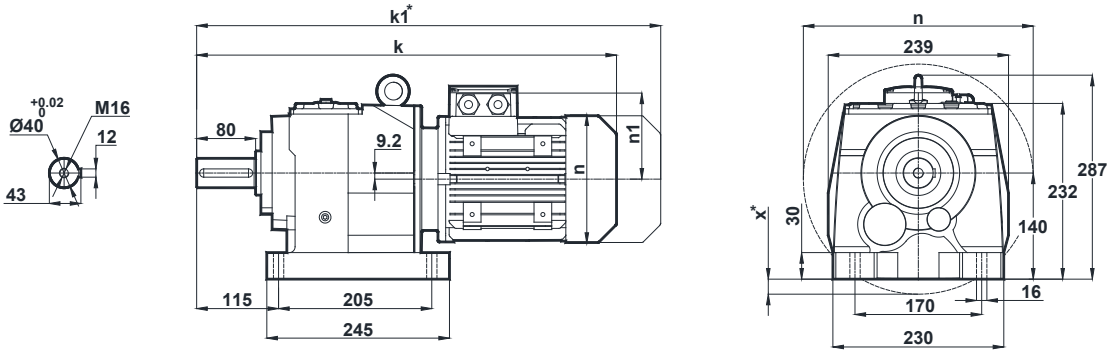

NR372
NR373

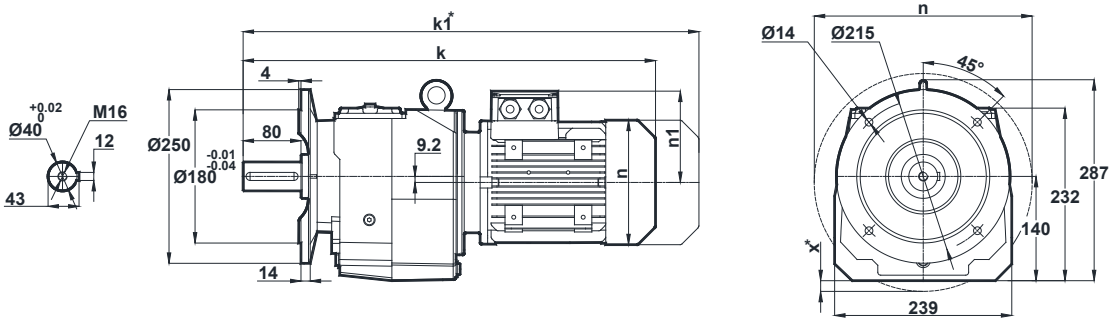

Motor Size								
	71	80	90S	90L	100L	112M	132S	132M
k	509.5	543.5	582.5	582.5	630.5	645.5	741	741
k1	600.5	636.5	686	686	739	759	871	871
n	137	155	176	176	193	215	257	257
n1	112	121	132	132	147	158	179	179
x	-	-	-	-	-	-	-	-

Terminal Box

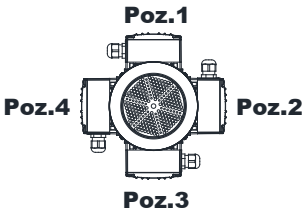

71-80-90-100-112-132

Optional Flange Dimensions

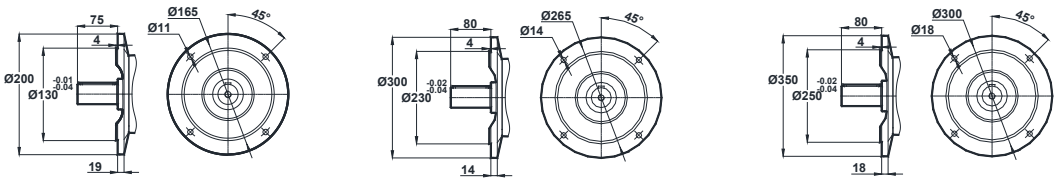

Opt. 1 **Opt. 2** **Opt. 3**

*Dimension " k1" is for motors with brake.
x: If Motor is lower than foot mounting plane

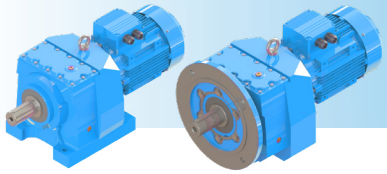

MR / NR - DIMENSION PAGES

MR374

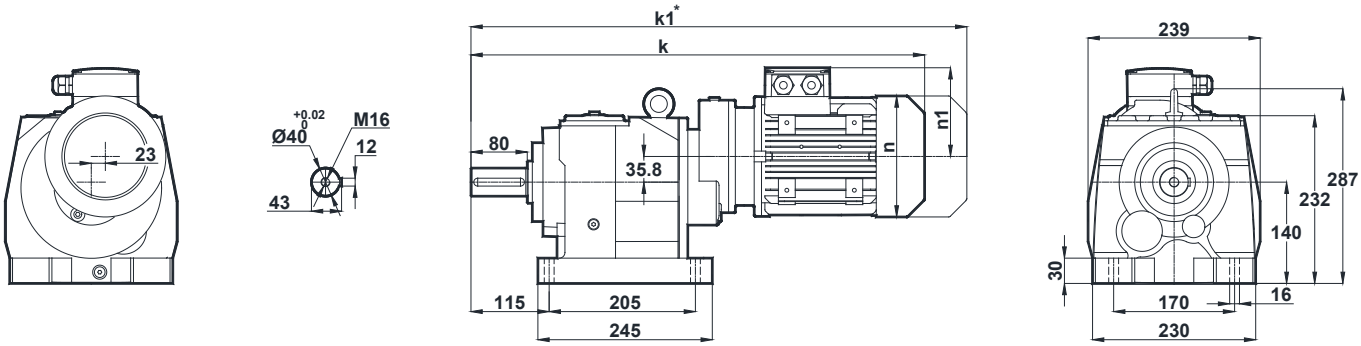

NR374

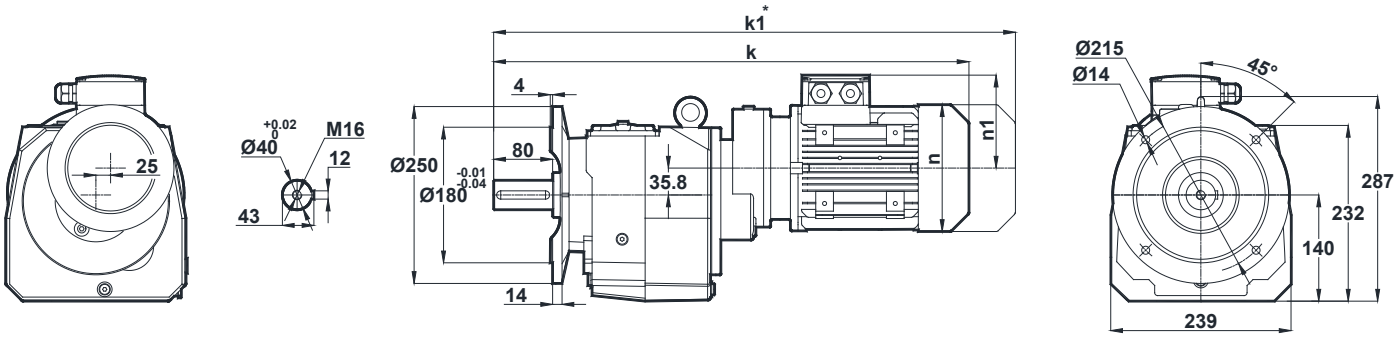

Motor Size			
	63	71	80
k	561.5	588.5	622.5
k1	622.5	679.5	715.5
n	121	137	155
n1	97	112	121

Terminal Box

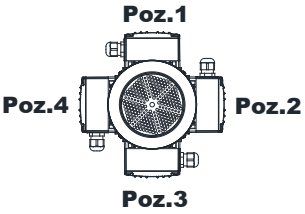

63-71-80

Optional Flange Dimensions

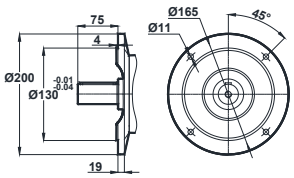

Opt. 1

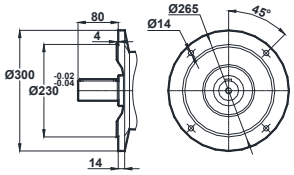

Opt. 2

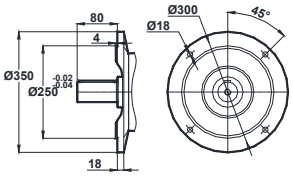

Opt. 3

*Dimension " k1" is for motors with brake.

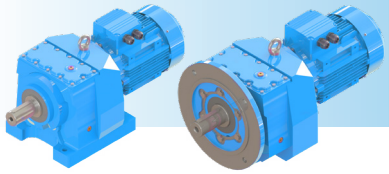

MR375
MR376

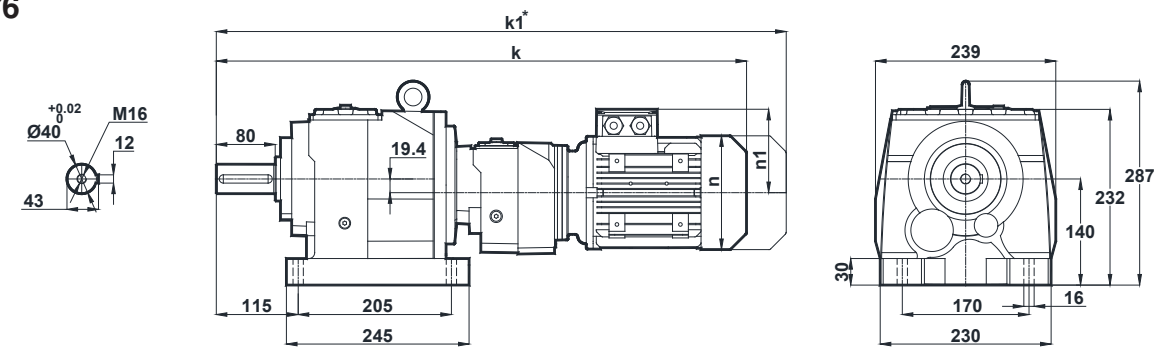

NR375
NR376

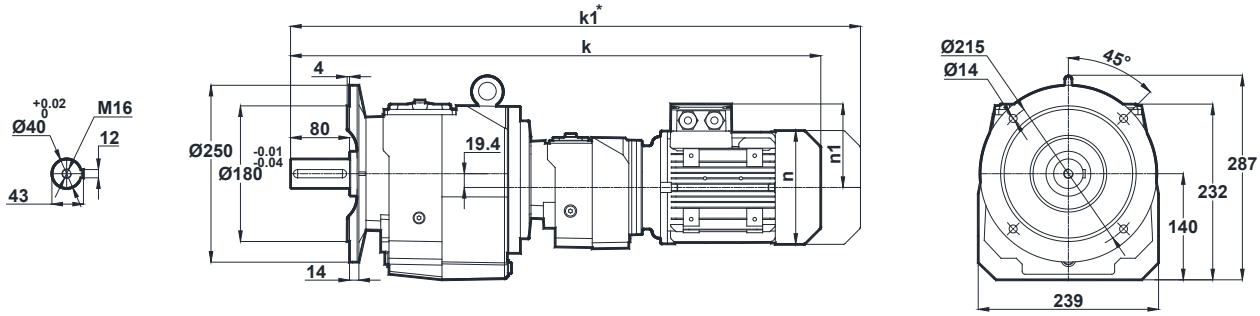

Motor Size	
	63
k	666
k1	727
n	121
n1	97

Terminal Box

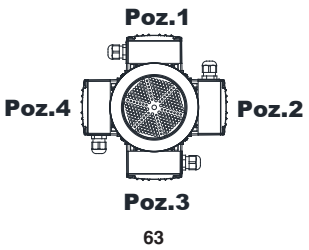

Optional Flange Dimensions

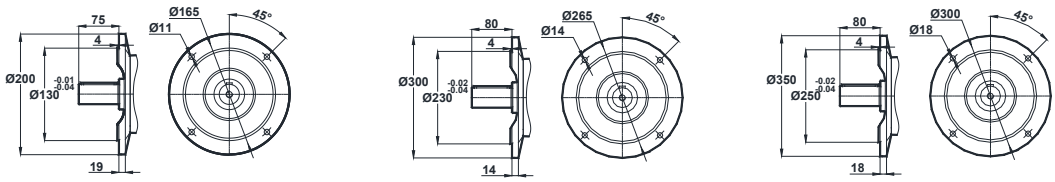

Opt. 1 **Opt. 2** **Opt. 3**

*Dimension " k1" is for motors with brake.

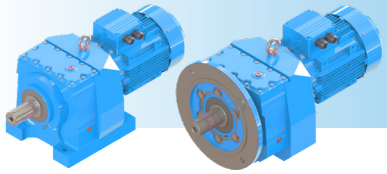

MR / NR - DIMENSION PAGES

MR472
MR473

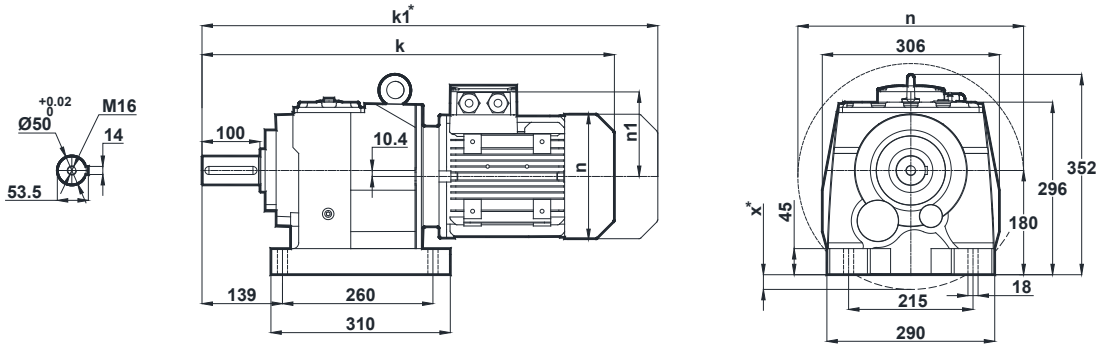

NR472
NR473

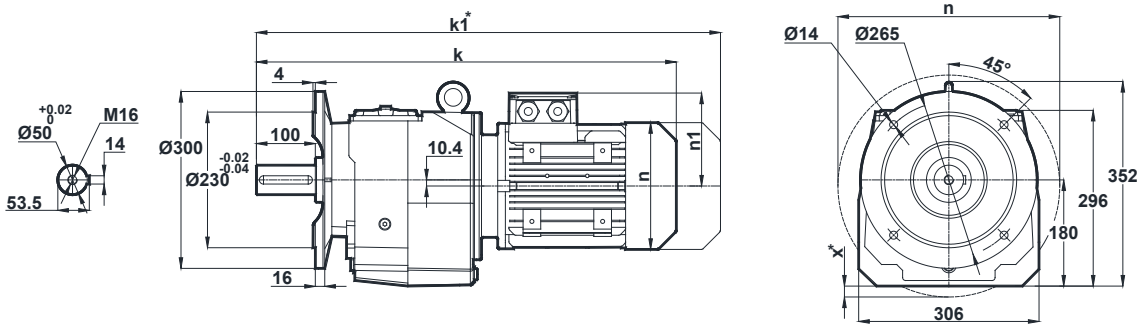

	Motor Size										
	80	90S	90L	100L	112M	132S	132M	160M	160L	180M	180L
k	610.5	649.5	649.5	694.5	718.5	803.5	803.5	899.5	899.5	971.5	971.5
k1	703.5	753	753	803	823	933.5	933.5	1047.5	1047.5	1130	1130
n	155	176	176	193	215	257	257	315	315	347	347
n1	121	132	132	147	158	179	179	219	219	234	234
x	-	-	-	-	-	-	-	-	-	3	3

Terminal Box

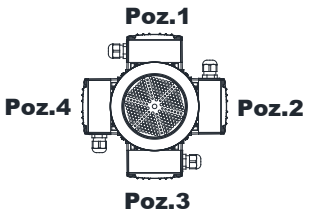

80-90-100-112-132-160-180

Optional Flange Dimensions

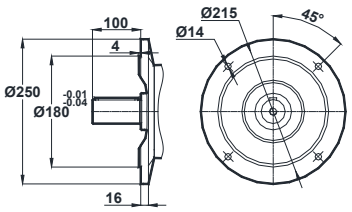

Opt. 1

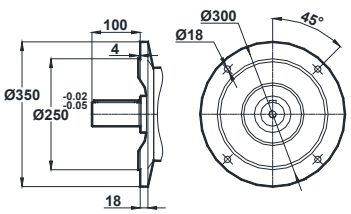

Opt. 2

*Dimension " k1" is for motors with brake.
x: If Motor is lower than foot mounting plane

MR474

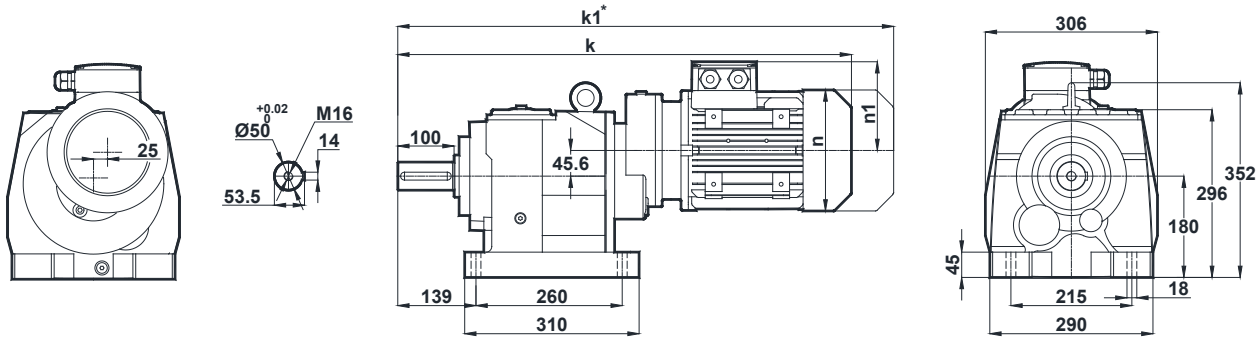

NR474

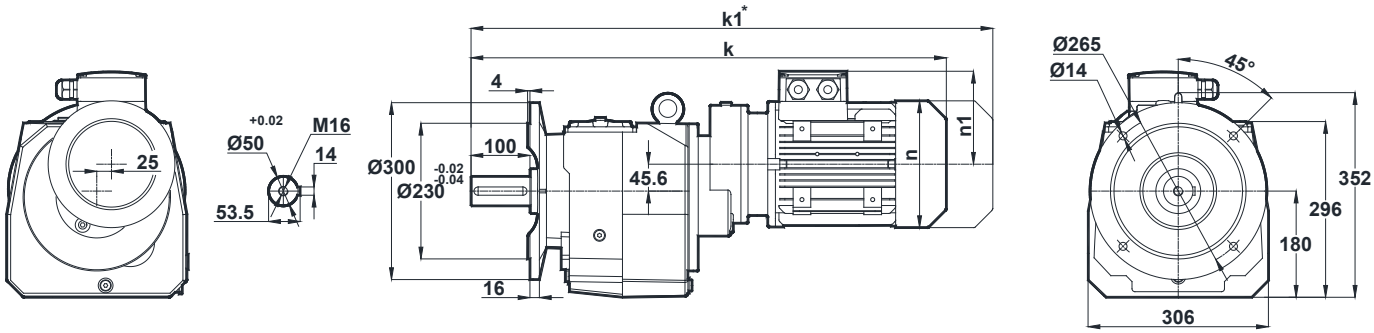

Motor Size		
	71	80
k	670	704
k1	761	797
n	137	155
n1	112	121

Terminal Box

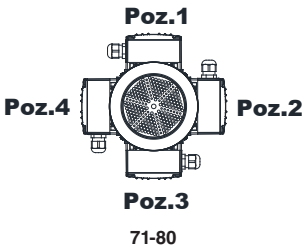

Optional Flange Dimensions

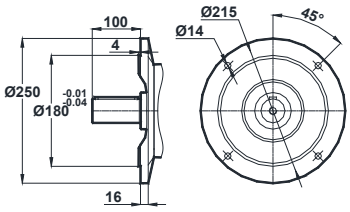

Opt. 1

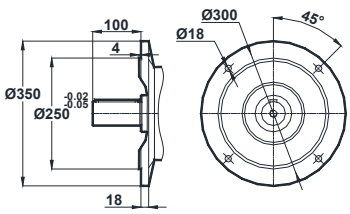

Opt. 2

*Dimension " k1" is for motors with brake.

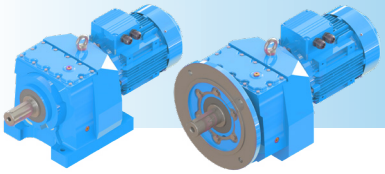

MR / NR - DIMENSION PAGES

MR475
MR476

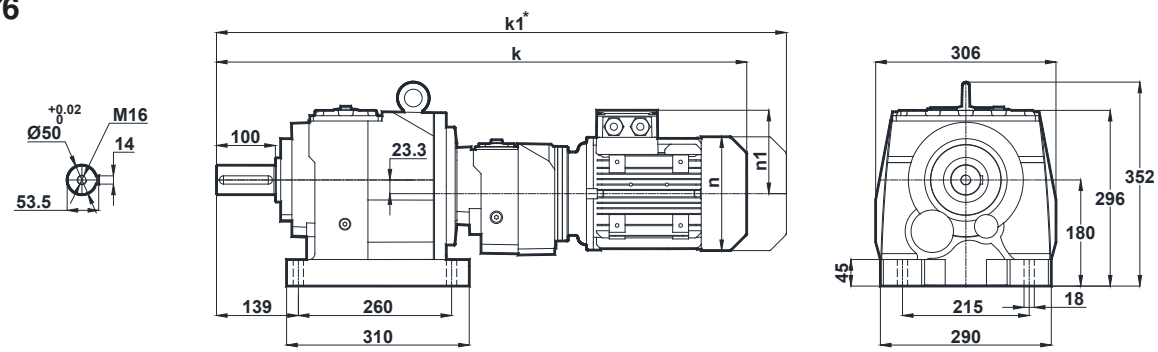

NR475
NR476

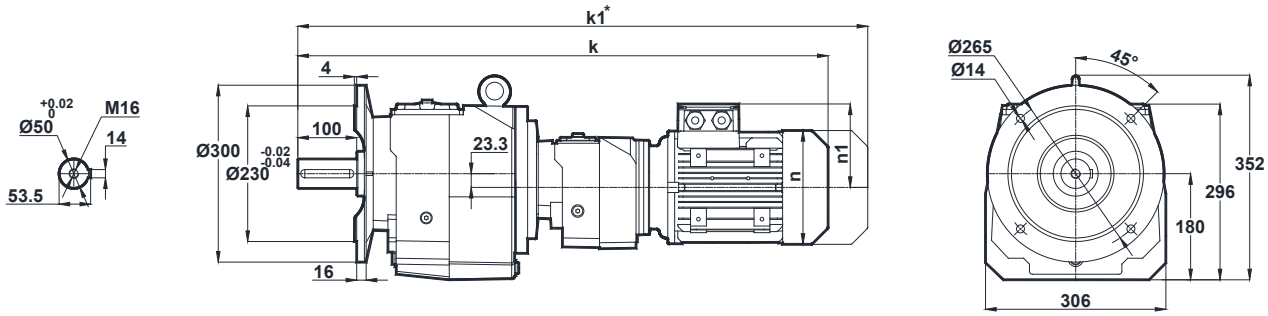

Motor Size		
	63	71
k	773	800
k1	834	891
n	121	137
n1	97	112

Terminal Box

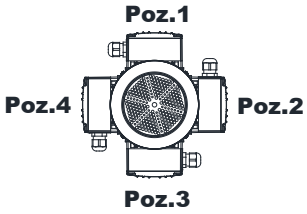

63-71

Optional Flange Dimensions

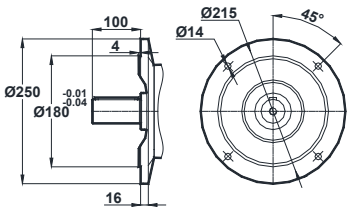

Opt. 1

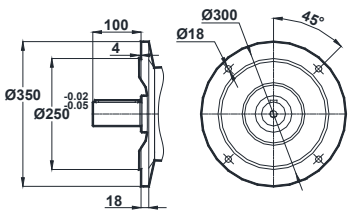

Opt. 2

*Dimension " k1" is for motors with brake.

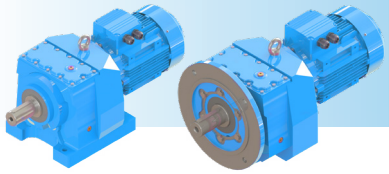

MR572
MR573

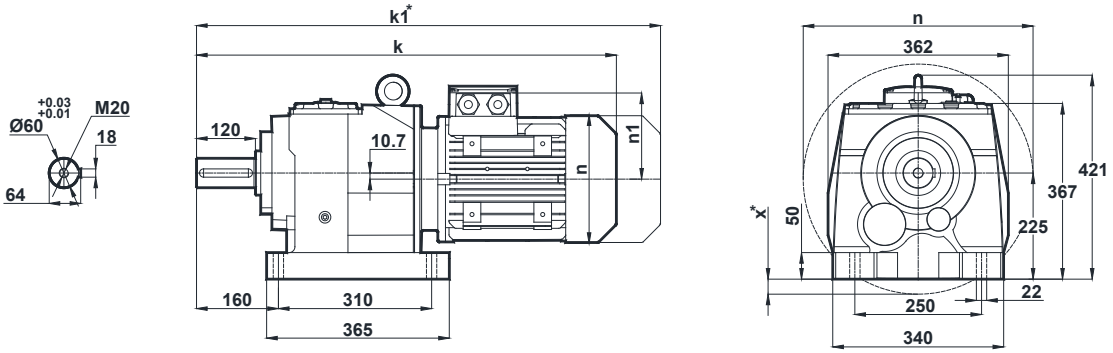

NR572
NR573

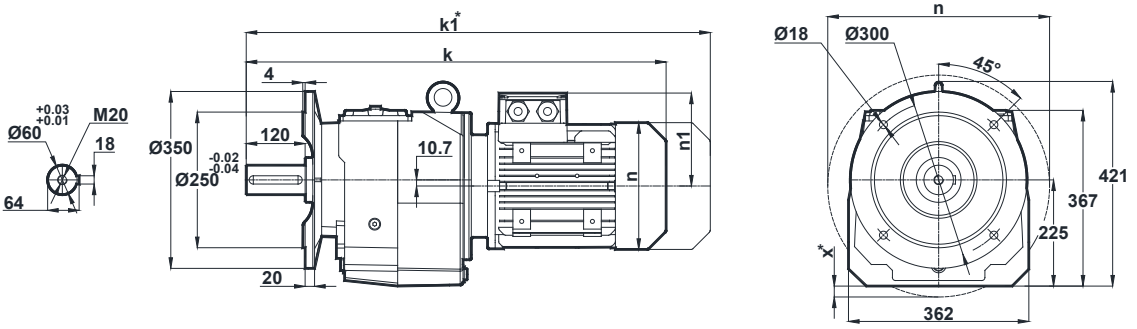

Motor Size									
	100L	112M	132S	132M	160M	160L	180M	180L	200L
k	753	777	863.5	863.5	959.5	959.5	1031.5	1031.5	1077.5
k1	861.5	881.5	993.5	993.5	1107.5	1107.5	1190	1190	1204
n	193	215	257	257	315	315	347	347	390
n1	147	158	179	179	219	219	234	234	275
x	-	-	-	-	-	-	-	-	-

Terminal Box

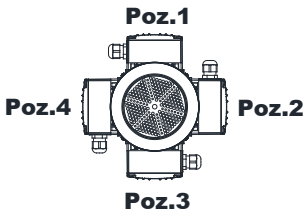

100-112-132-160-180-200

Optional Flange Dimensions

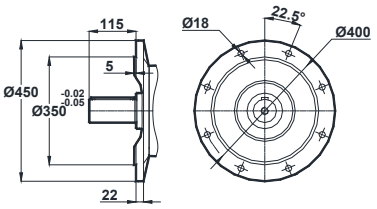

Opt. 1

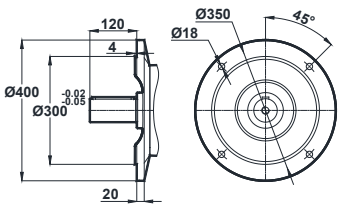

Opt. 2

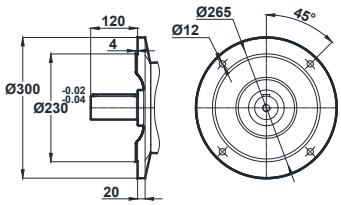

Opt. 3

*Dimension " k1" is for motors with brake.
x: If Motor is lower than foot mounting plane

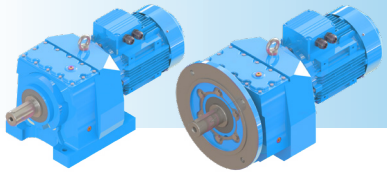

MR / NR - DIMENSION PAGES

MR574

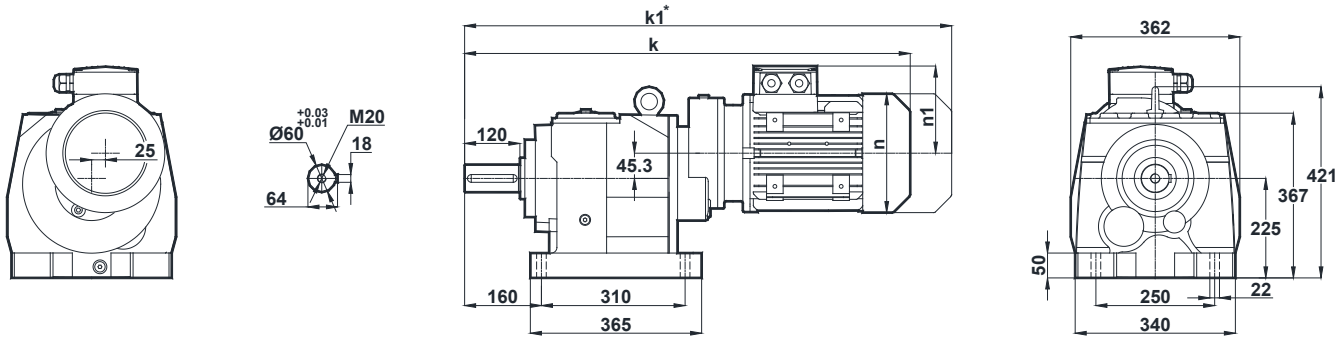

NR574

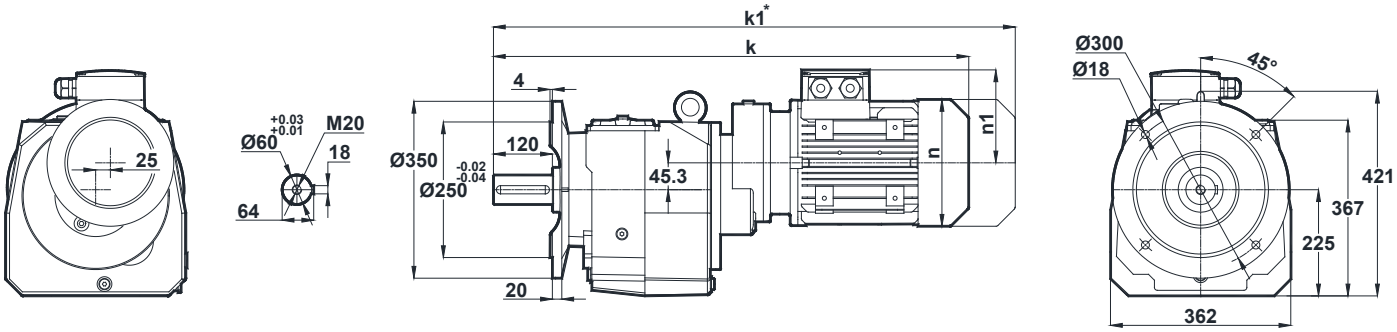

Motor Size					
	71	80	90S	90L	100L
k	733	767	806	806	854
k1	824	860	909.5	909.5	962.5
n	137	155	176	176	193
n1	112	121	132	132	147

Terminal Box

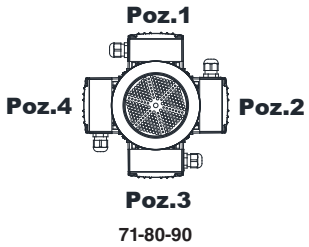

Optional Flange Dimensions

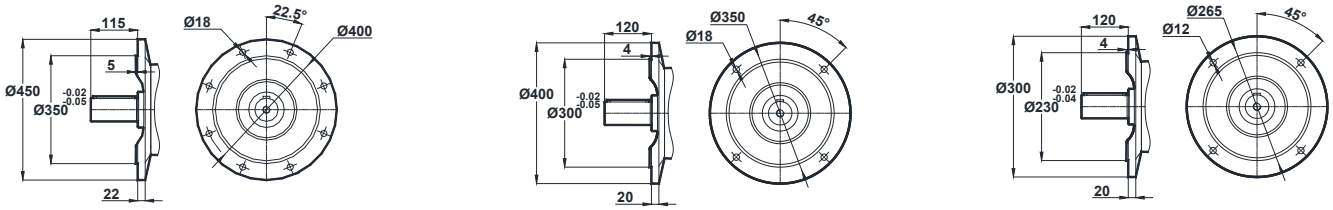

Opt. 1 **Opt. 2** **Opt. 3**

*Dimension " k1" is for motors with brake.

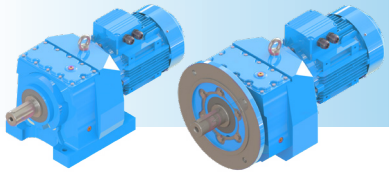

MR575
MR576

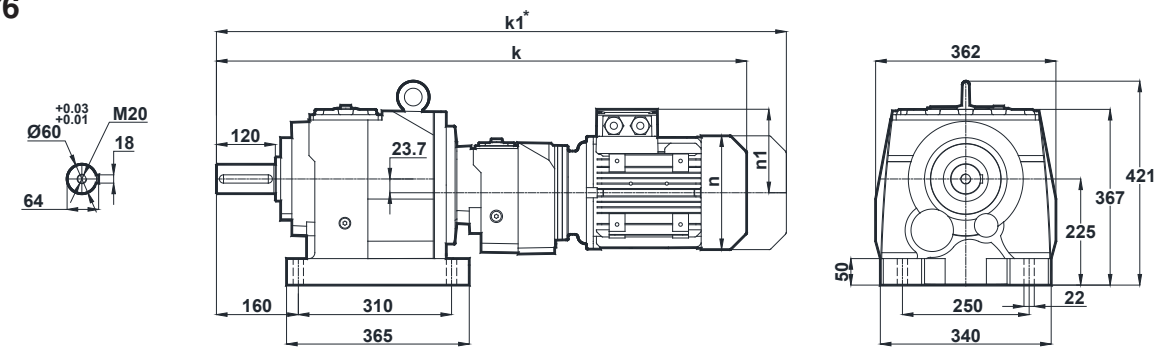

NR575
NR576

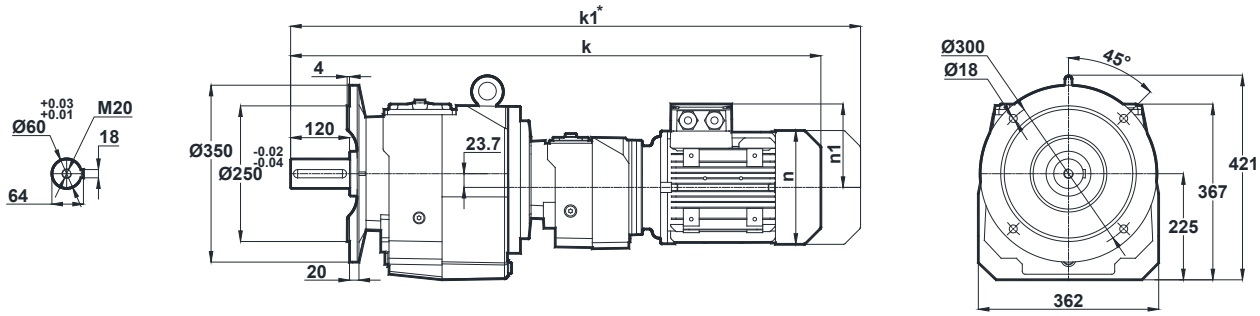

Motor Size		
	63	71
k	838	865
k1	899	956
n	121	137
n1	97	112

Terminal Box

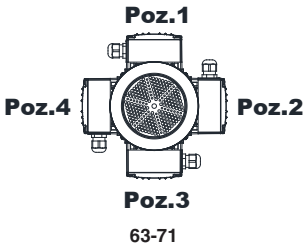

Optional Flange Dimensions

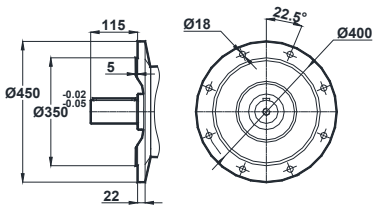

Opt. 1

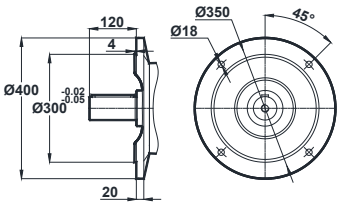

Opt. 2

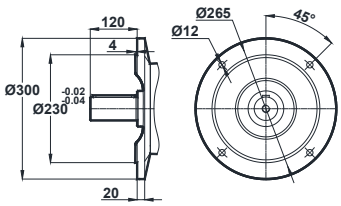

Opt. 3

*Dimension " k1" is for motors with brake.

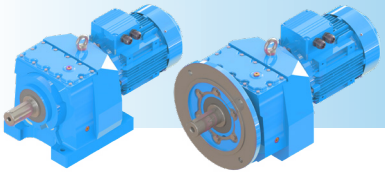

MR / NR - DIMENSION PAGES

MR672
MR673

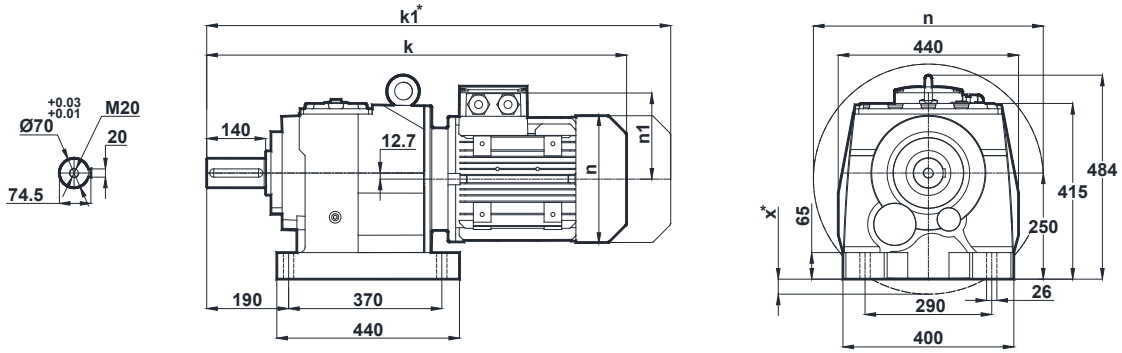

NR672
NR673

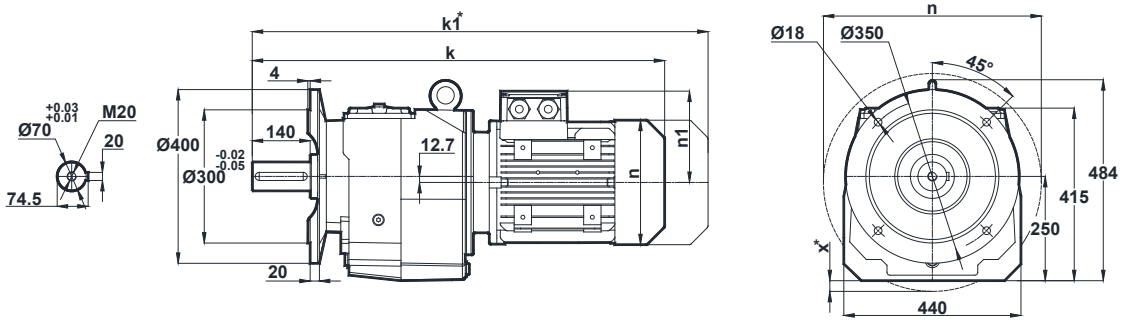

	Motor Size									
	112M	132S	132M	160M	160L	180M	180L	200L	225S	225M
k	833	919.5	919.5	1015.5	1015.5	1087.5	1087.5	1133.5	1160	1185
k1	937.5	1049.5	1049.5	1163.5	1163.5	1246	1246	1320	1325	1350
n	215	257	257	315	315	347	347	390	434	434
n1	158	179	179	219	219	234	234	275	285	285
x	-	-	-	-	-	-	-	-	-	-

Terminal Box

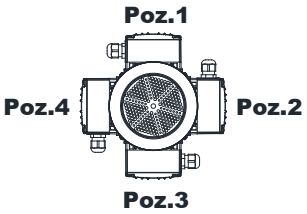

112-132-160-180-200-225

Optional Flange Dimensions

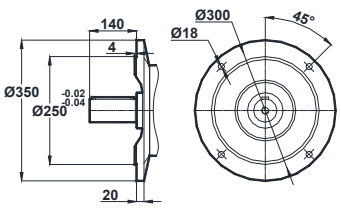

Opt. 1

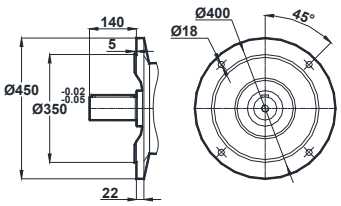

Opt. 2

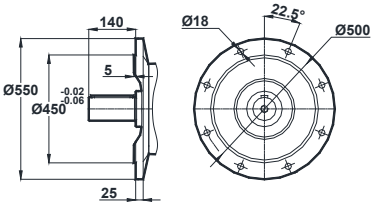

Opt. 3

*Dimension " k1" is for motors with brake.
x: If Motor is lower than foot mounting plane

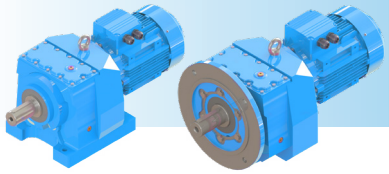

MR674

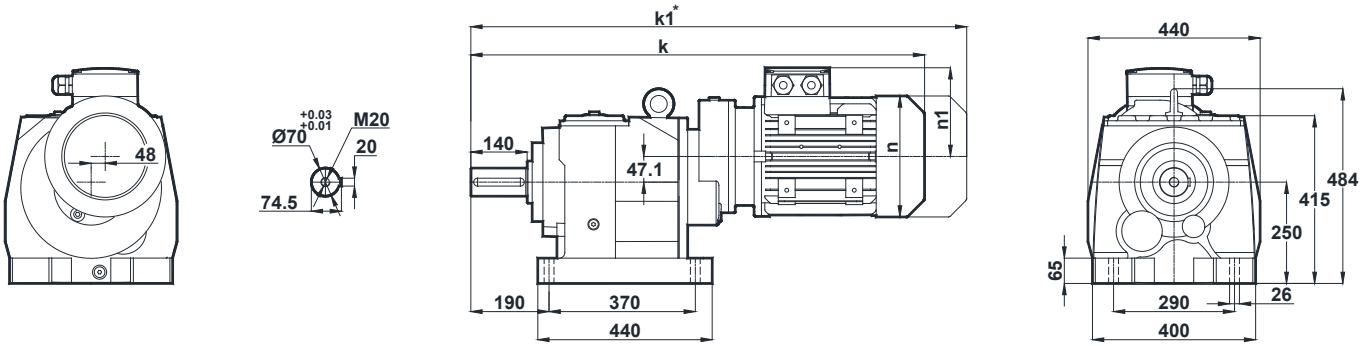

NR674

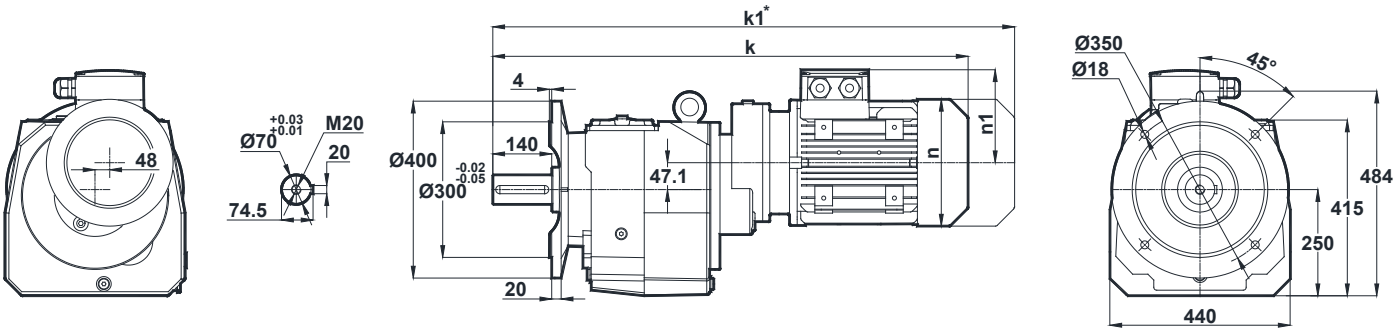

Motor Size			
	80	90S	90L
k	841.5	880.5	880.5
k1	934.5	984	984
n	155	176	176
n1	121	132	132

Terminal Box

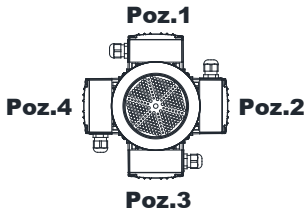

80-90

Optional Flange Dimensions

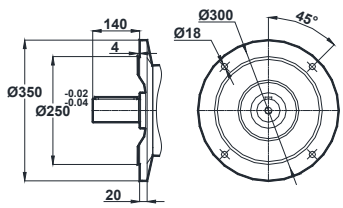

Opt. 1

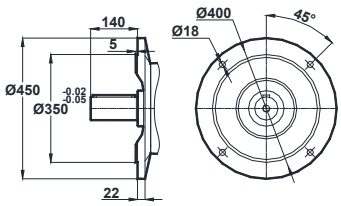

Opt. 2

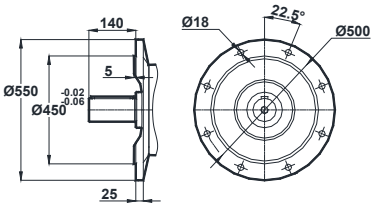

Opt. 3

*Dimension " k1" is for motors with brake.

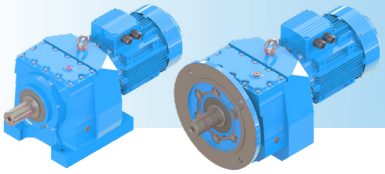

MR / NR - DIMENSION PAGES

MR675
MR676

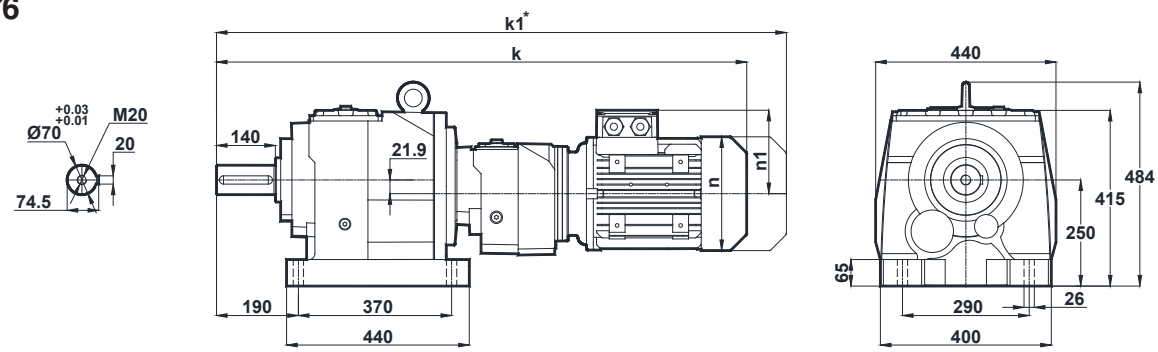

NR675
NR676

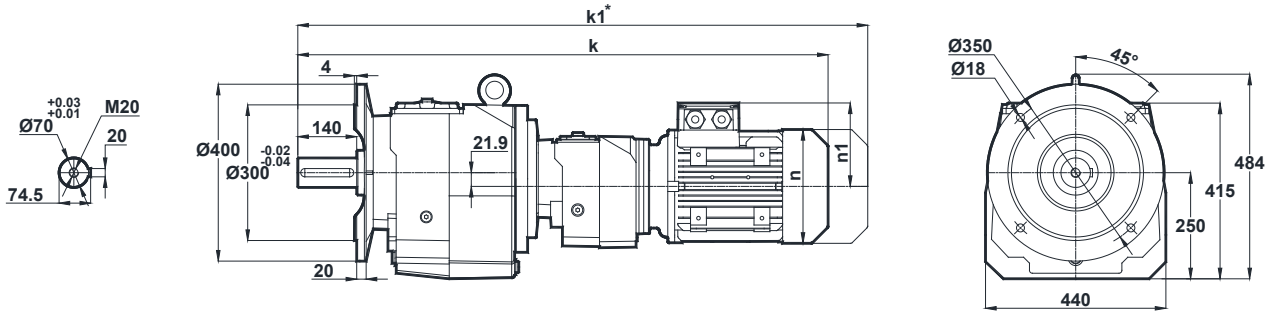

Motor Size		
	71	80
k	953.5	987.5
k1	1044.5	1080.5
n	137	155
n1	112	121

Terminal Box

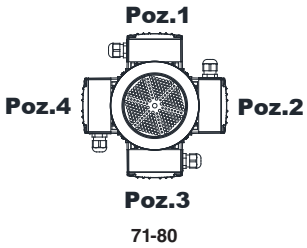

Optional Flange Dimensions

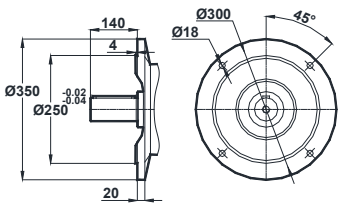

Opt. 1

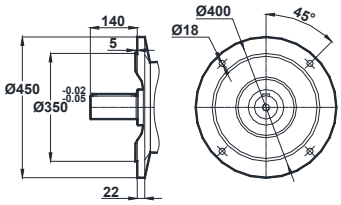

Opt. 2

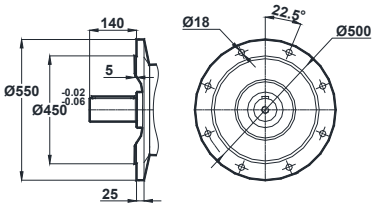

Opt. 3

*Dimension " k1" is for motors with brake.

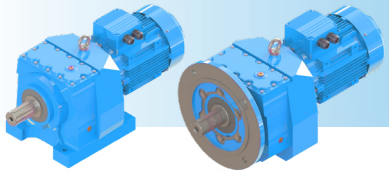

MR772
MR773

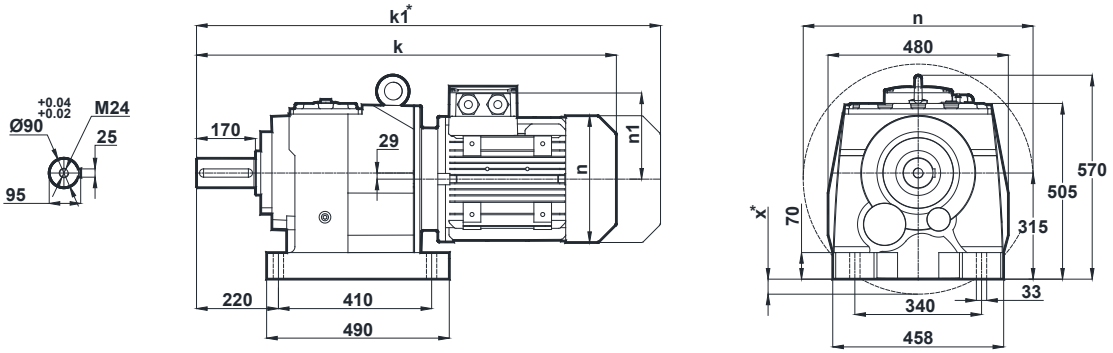

NR772
NR773

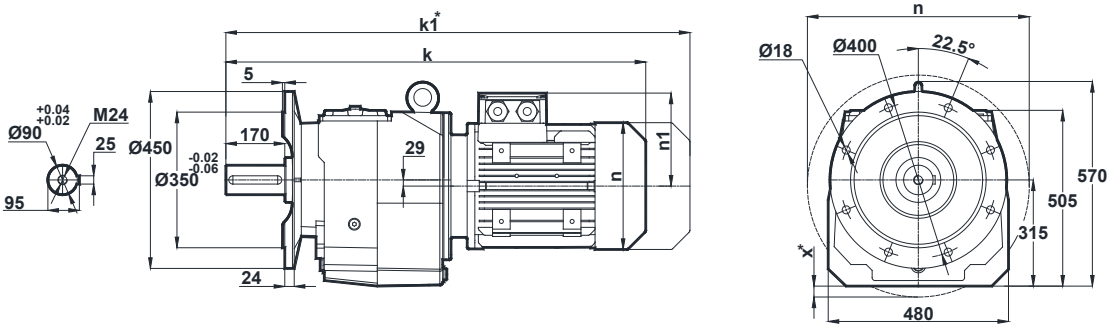

Motor Size										
	132S	132M	160M	160L	180M	180L	200L	225S	225M	250M
k	1000.5	1000.5	1096.5	1096.5	1168.5	1168.5	1214.5	1241.5	1266.5	1358.5
k1	1130.5	1130.5	1244.5	1244.5	1327	1327	1401	1406.5	1431.5	1529
n	257	257	315	315	347	347	390	434	434	480
n1	179	179	219	219	234	234	275	285	285	322
x	-	-	-	-	-	-	-	-	-	-

Terminal Box

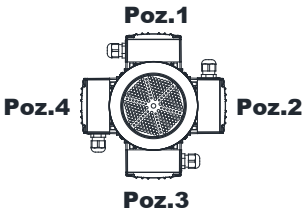

132-160-180-200-225-250

Optional Flange Dimensions

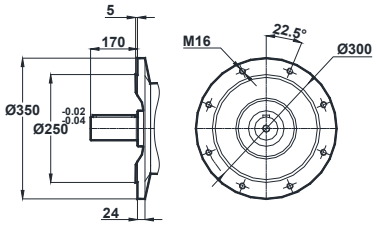

Opt. 1

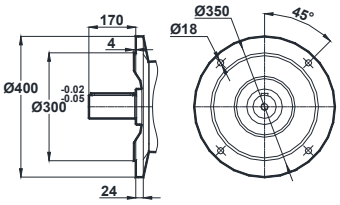

Opt. 2

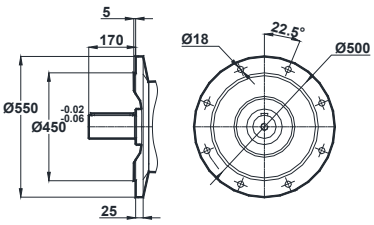

Opt. 3

*Dimension " k1" is for motors with brake.
x: If Motor is lower than foot mounting plane

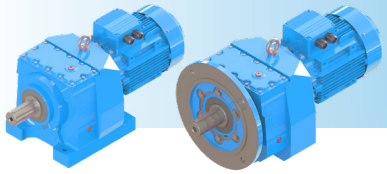

MR / NR - DIMENSION PAGES

MR774

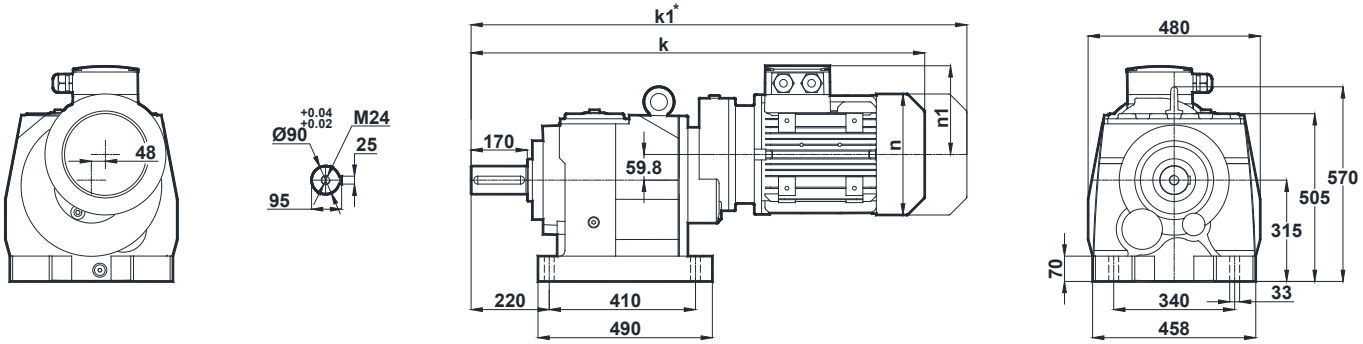

NR774

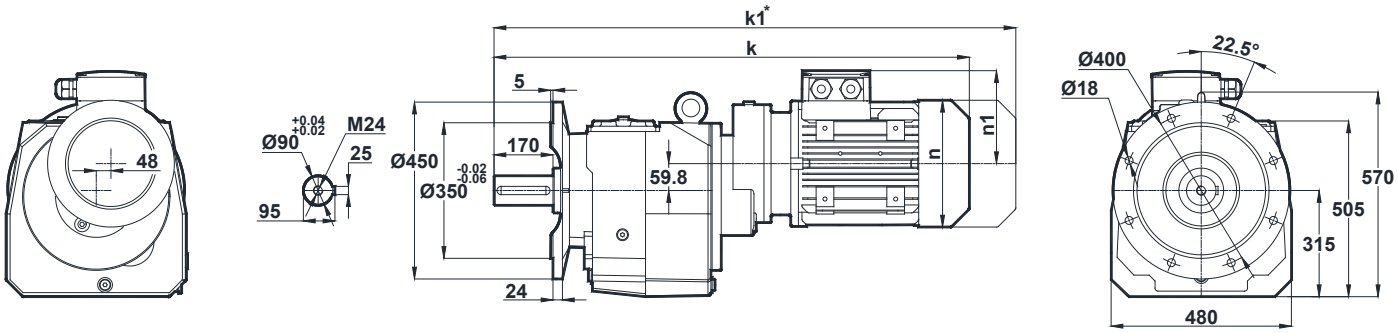

Motor Size				
	80	90S	90L	100L
k	926.5	965.5	965.5	1010.5
k1	1019.5	1069	1069	1119
n	155	176	176	193
n1	121	132	132	147

Terminal Box

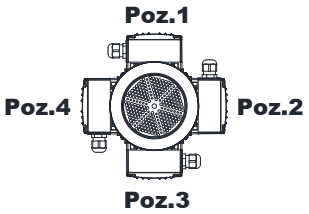

80-90-100

Optional Flange Dimensions

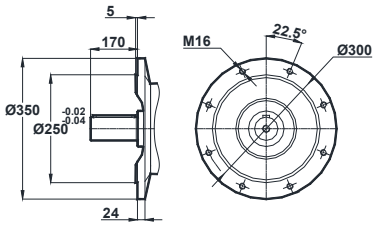

Opt. 1

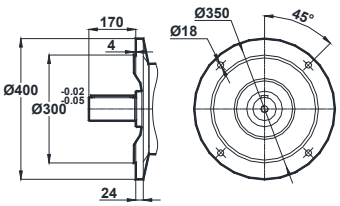

Opt. 2

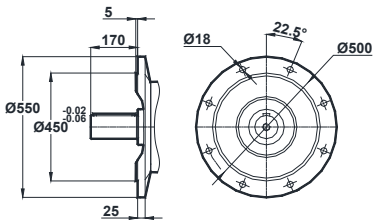

Opt. 3

*Dimension " k1" is for motors with brake.

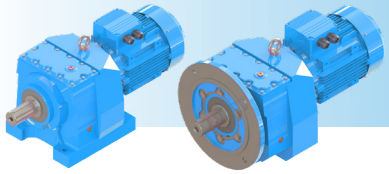

MR775
MR776

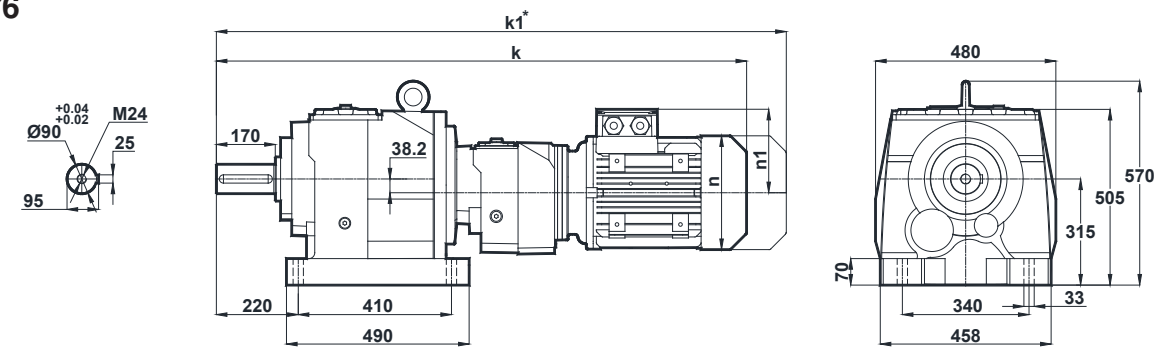

NR775
NR776

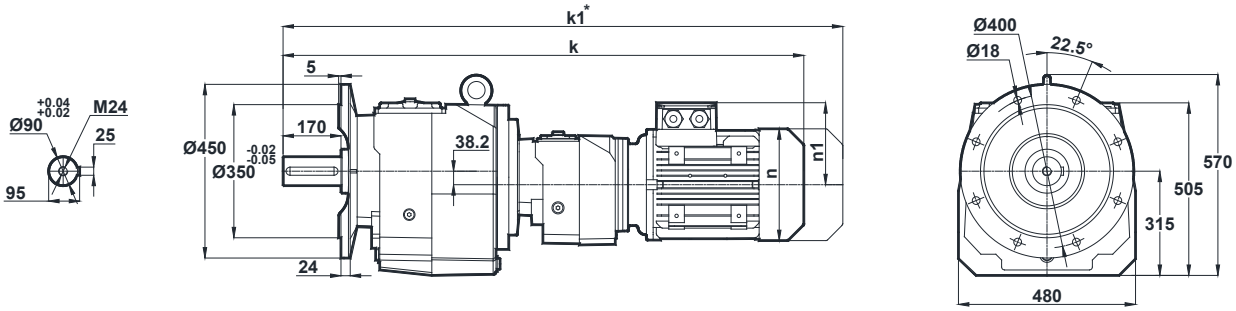

Motor Size				
	71	80	90S	90L
k	1041.5	1075.5	1114.5	1114.5
k1	1132.5	1168.5	1218	1218
n	137	155	176	176
n1	112	121	132	132

Terminal Box

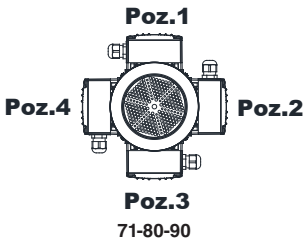

Optional Flange Dimensions

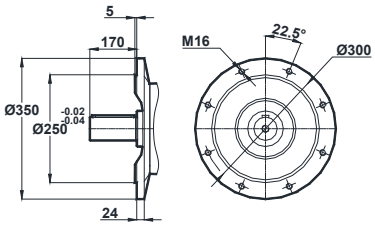

Opt. 1

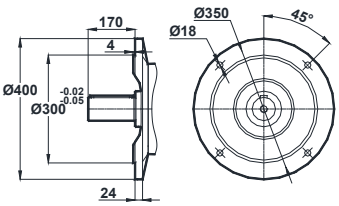

Opt. 2

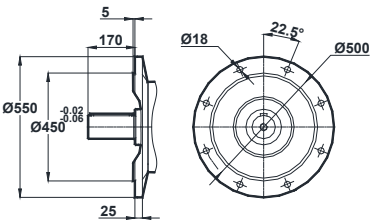

Opt. 3

*Dimension " k1" is for motors with brake.

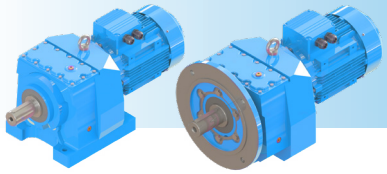

MR / NR - DIMENSION PAGES

MR872
MR873

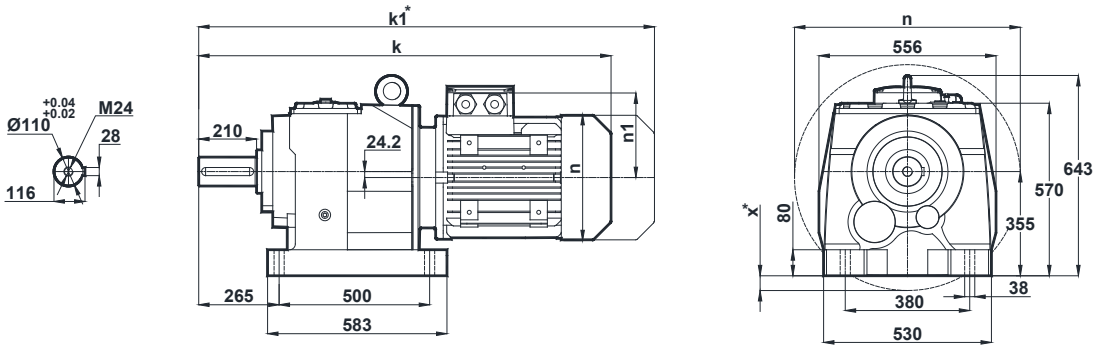

NR872
NR873

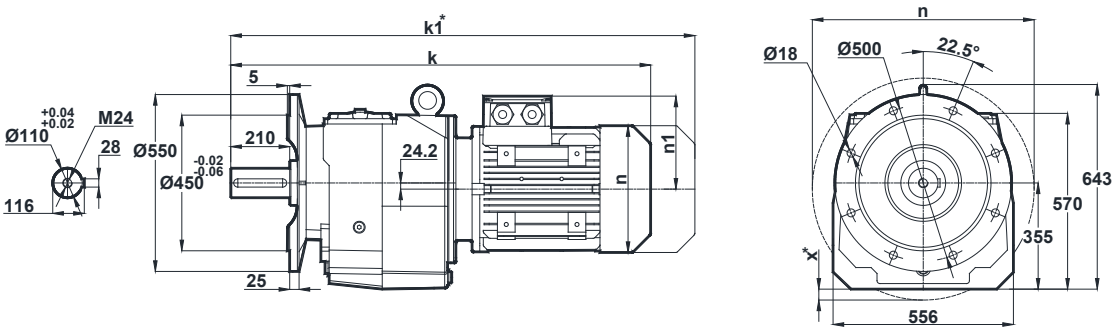

Motor Size											
	132M	160M	160L	180M	180L	200L	225S	225M	250M	280S	280M
k	1109.5	1205.5	1205.5	1277.5	1277.5	1323.5	1353	1378	1468.5	1530.5	1530.5
k1	1239.5	1353.5	1353.5	1436	1436	1510	1518	1543	1639	1703.5	1709.5
n	257	315	315	347	347	390	434	434	480	544	544
n1	179	219	219	234	234	275	285	285	322	350	350
x	-	-	-	-	-	-	-	-	-	-	-

Terminal Box

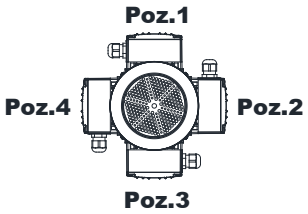

132-160-180-200-225-250-280

Optional Flange Dimensions

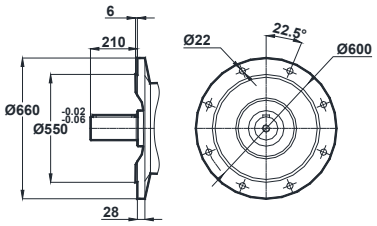

Opt. 1

*Dimension " k1" is for motors with brake.
x: If Motor is lower than foot mounting plane

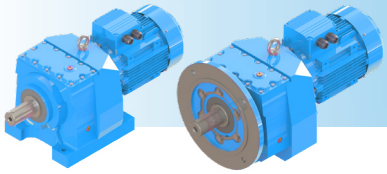

MR874

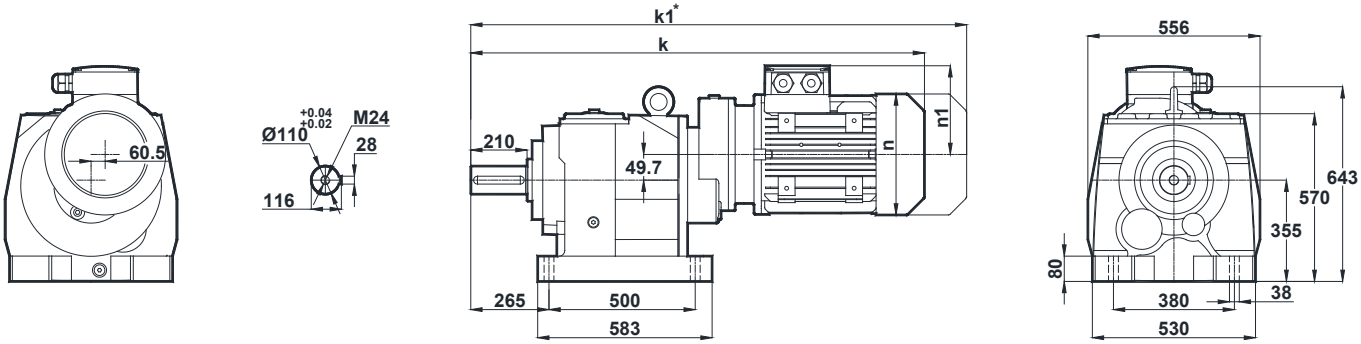

NR874

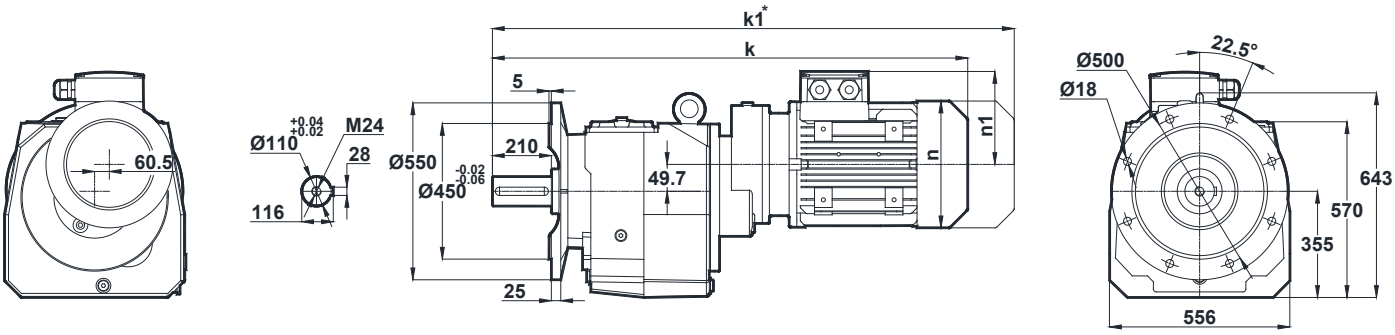

Motor Size				
	100L	112M	132S	132M
k	1141	1165	1251.5	1251.5
k1	1249.5	1269.5	1381.5	1381.5
n	193	215	257	257
n1	147	158	179	179

Terminal Box

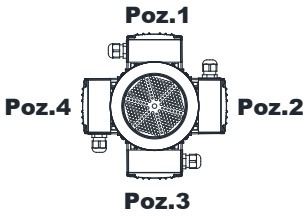

100-112-132

Optional Flange Dimensions

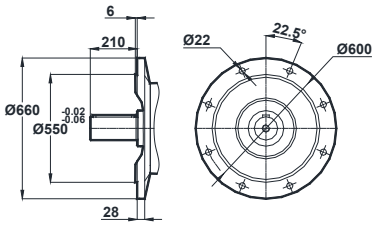

Opt. 1

*Dimension " k1" is for motors with brake.

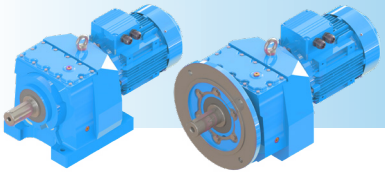

MR / NR - DIMENSION PAGES

MR875
MR876

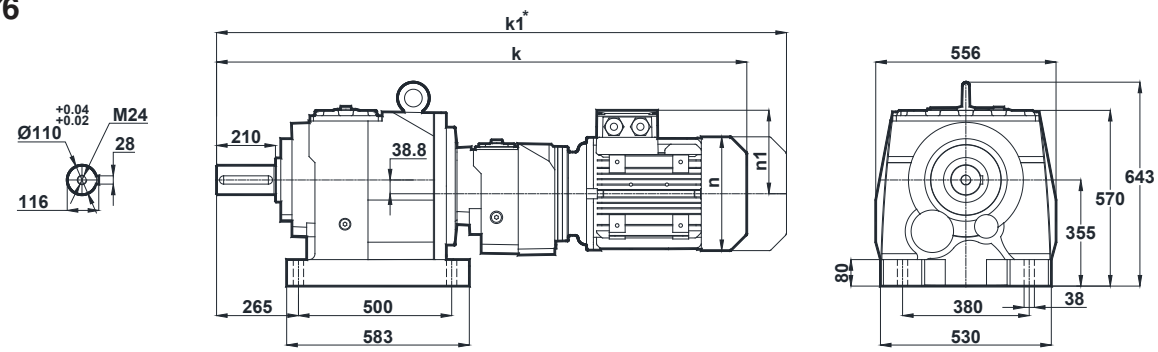

NR875
NR876

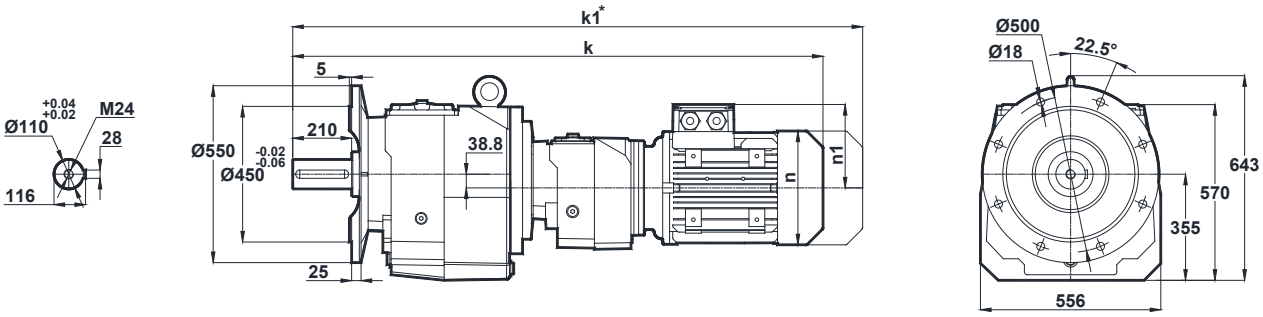

Motor Size					
	71	80	90S	90L	100L
k	1158.5	1192.5	1231.5	1231.5	1279.5
k1	1249.5	1285.5	1335	1335	1388
n	137	155	176	176	193
n1	112	121	132	132	147

Terminal Box

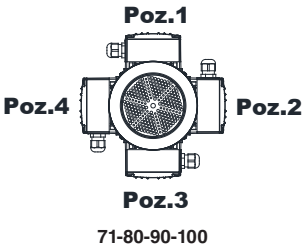

Optional Flange Dimensions

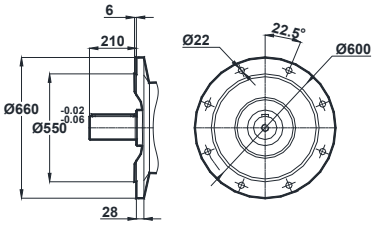

Opt. 1

*Dimension " k1" is for motors with brake.

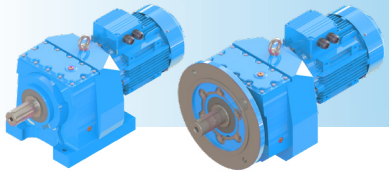

MR972
MR973

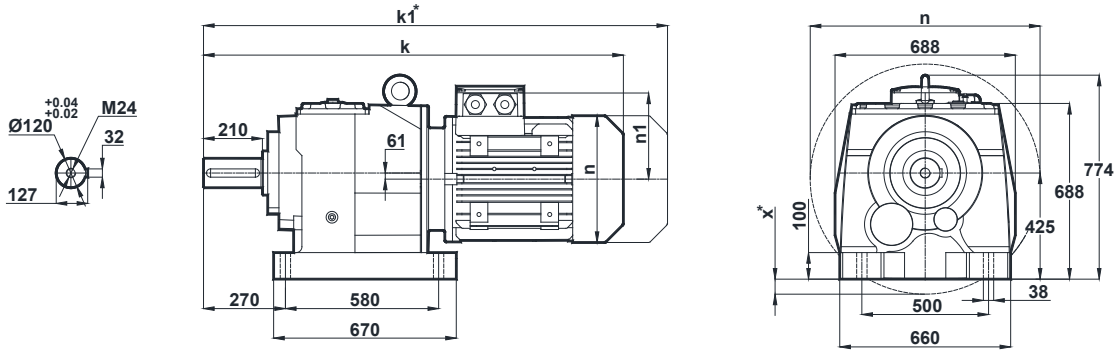

NR972
NR973

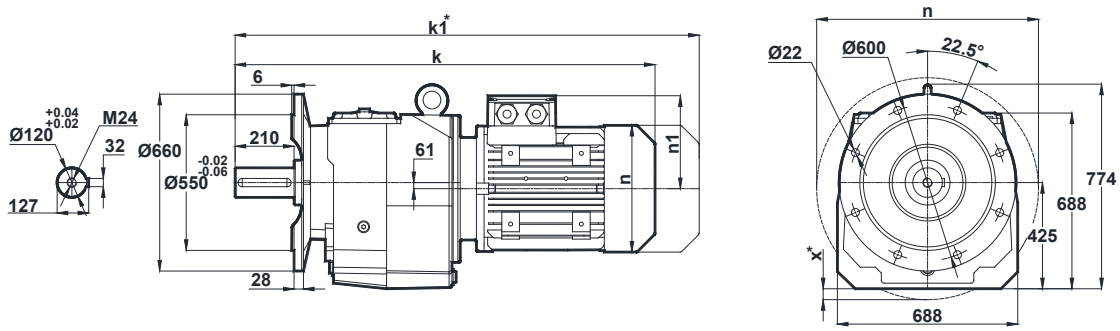

Motor Size												
	160M	160L	180M	180L	200L	225S	225M	250M	280S	280M	315S	315M
k	1271	1271	1343	1343	1389	1402.5	1430.5	1521	1583	1583	1701.5	1753.5
k1	1419	1419	1501.5	1501.5	1575.5	1567.5	1595.5	1691.5	1756	1762	-	-
n	315	315	347	347	390	434	434	480	544	544	614	614
n1	219	219	234	234	275	285	285	322	350	350	510	510
x	-	-	-	-	-	-	-	-	-	-	-	-

Terminal Box

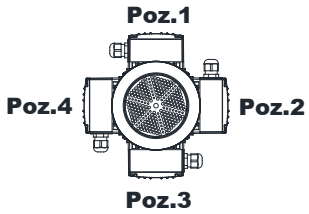

160-180-200-225-250-280-315

*Dimension " k1" is for motors with brake.
x: If Motor is lower than foot mounting plane

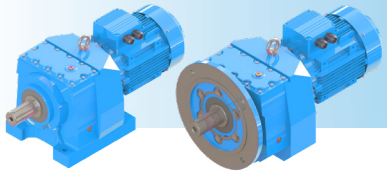

MR / NR - DIMENSION PAGES

MR974

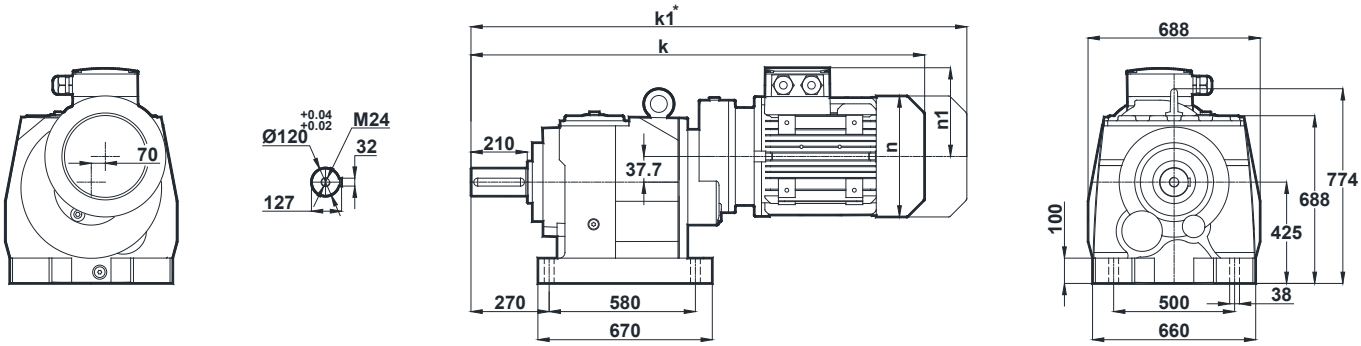

NR974

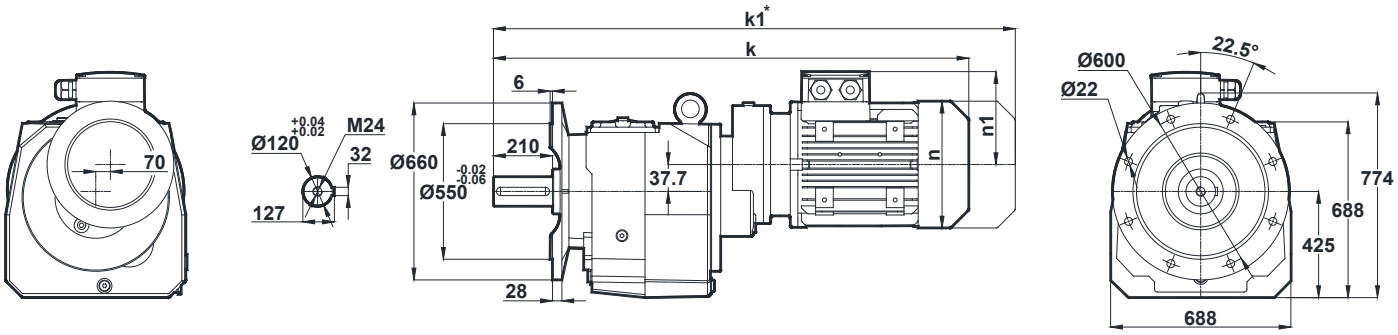

Motor Size				
	100L	112M	132S	132M
k	1240.5	1264.5	1351	1351
k1	1349	1369	1481	1481
n	193	215	257	257
n1	147	158	179	179

Terminal Box

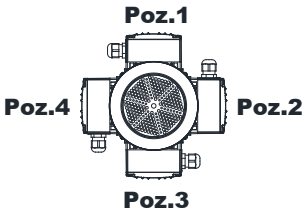

100-112-132

*Dimension " k1" is for motors with brake.

MR975
MR976

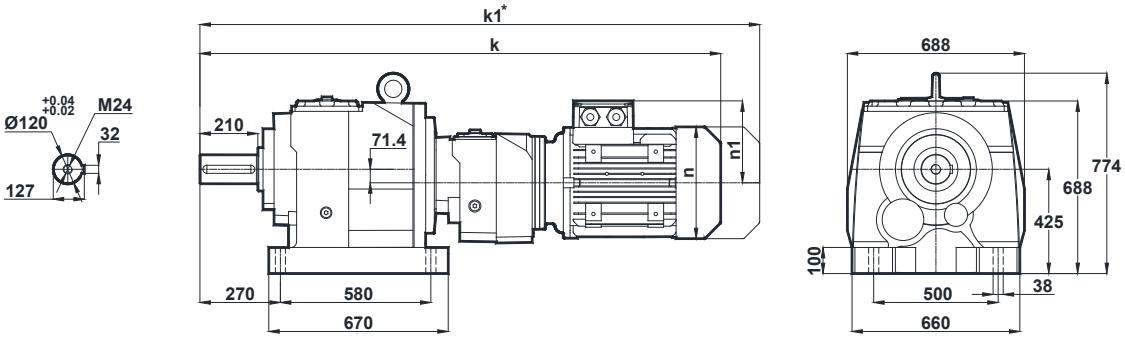

NR975
NR976

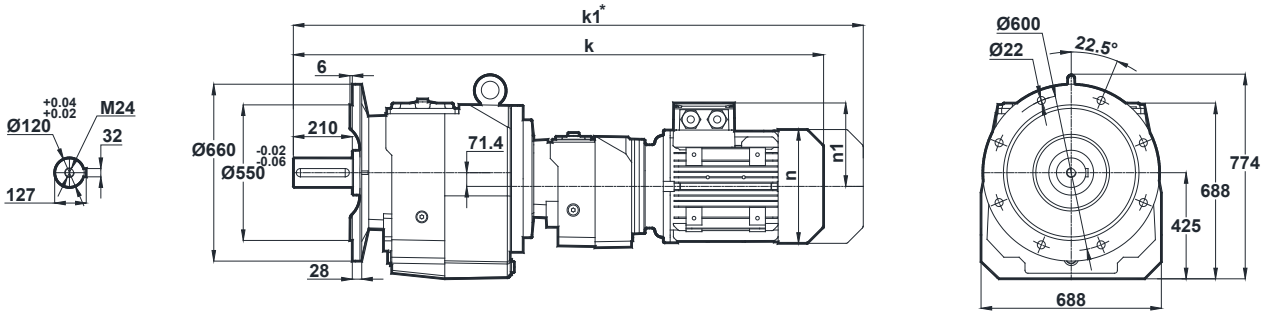

Motor Size						
	80	90S	90L	100L	112M	132S
k	1319	1358	1358	1403	1427	1512
k1	1412	1461.5	1461.5	1511.5	1531.5	1642
n	155	176	176	193	215	257
n1	121	132	132	147	158	179

Terminal Box

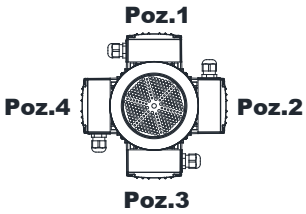

80-90-100-112-132

*Dimension " k1" is for motors with brake.

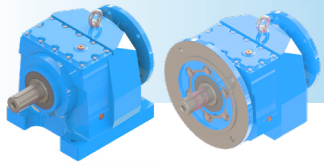

MN / NN - DIMENSION PAGES

Tapped center hole to DIN 332, sheet 2

MN002-A..
MN003-A..

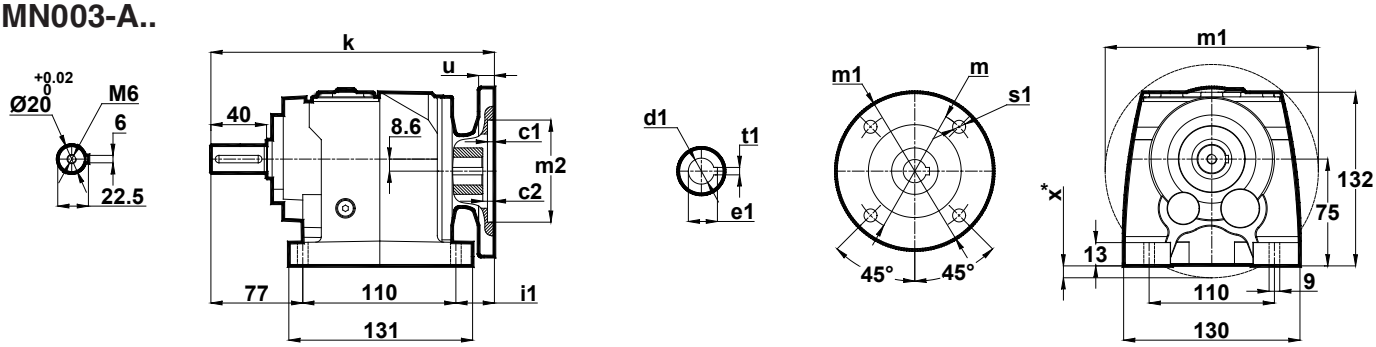

NN002-A..
NN003-A..

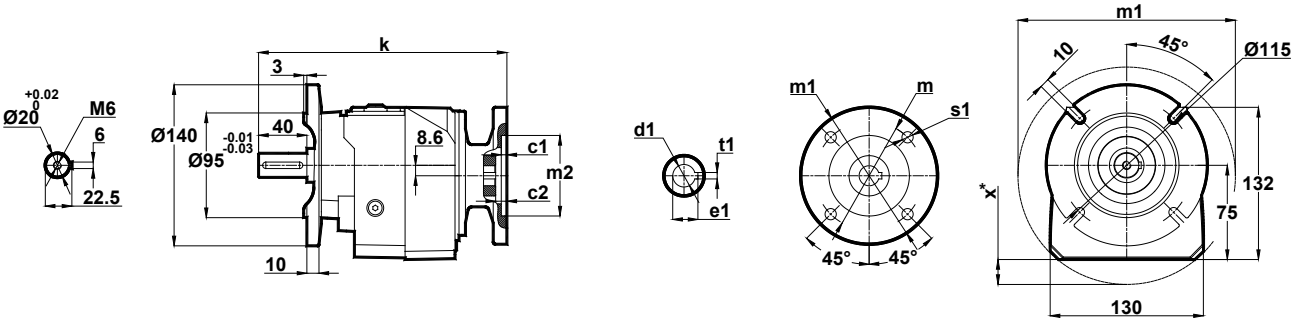

IEC	c1	c2	s1	m	m1	m2	i1	u	k	d1	t1	e1	x
63/B5	3.5	5	10	115	140	95	28	10	214	11	4	12.8	4
71/B5	4	4.5	11	130	160	110	29.5	12	215.5	14	5	16.3	14
80/B5	4	5	12	165	200	130	44.5	12	230.5	19	6	21.8	34
90/B5	4	5	12	165	200	130	44.5	12	230.5	24	8	27.3	34

Optional Flange Dimensions

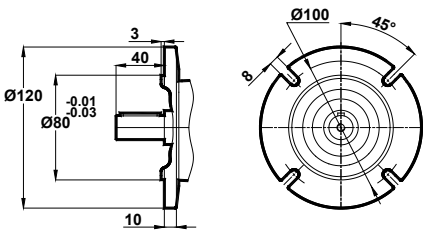

Opt. 1

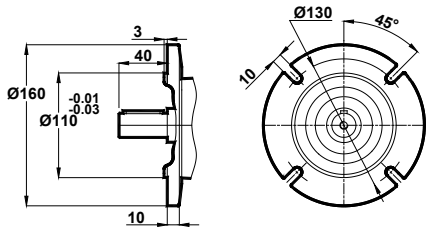

Opt. 2

x: If Motor is lower than foot mounting plane

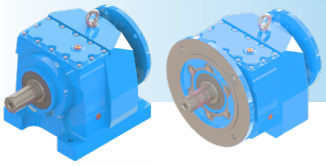

Tapped center hole to DIN 332, sheet 2

MN002-B..
MN003-B..

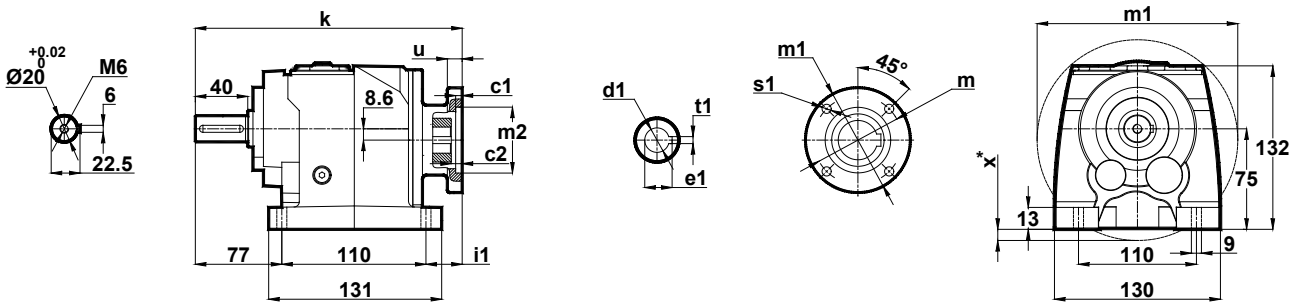

NN002-B..
NN003-B..

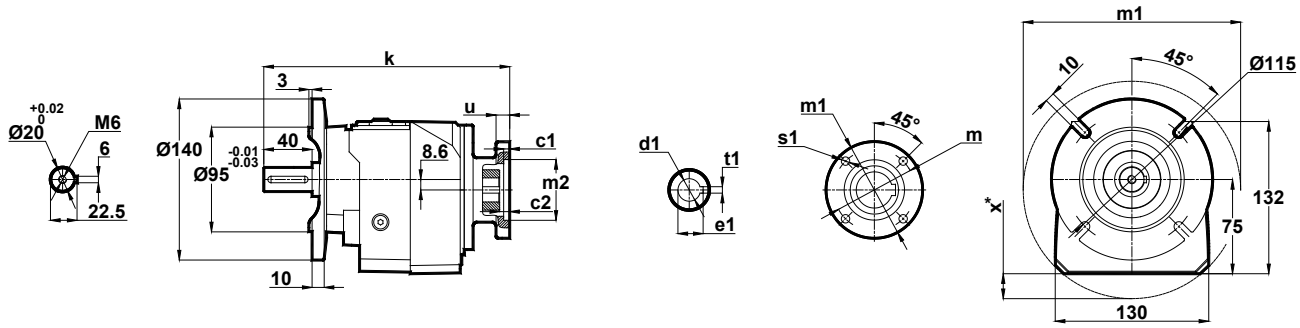

IEC	c1	c2	s1	m	m1	m2	i1	u	k	d1	t1	e1	x
63/B14	2.5	5	5.5	75	90	60	28	10	214	11	4	12.8	-
71/B14	3	4.5	7	85	105	70	29.5	10	215.5	14	5	16.3	-
80/B14	4	5	7	100	120	80	44.5	12	230.5	19	6	21.8	-
90/B14	4	5	9	115	140	95	44.5	12	230.5	24	8	27.3	4

Optional Flange Dimensions

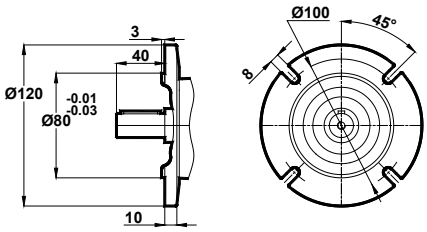

Opt. 1

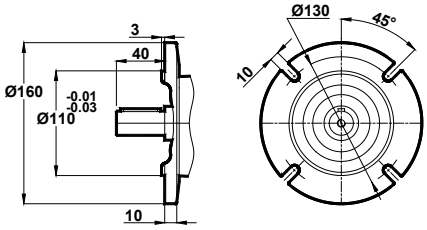

Opt. 2

x: If Motor is lower than foot mounting plane

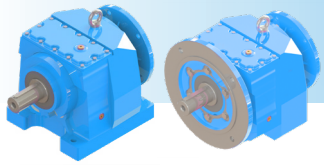

MN / NN - DIMENSION PAGES

Tapped center hole to DIN 332, sheet 2

MN102-A..
MN103-A..

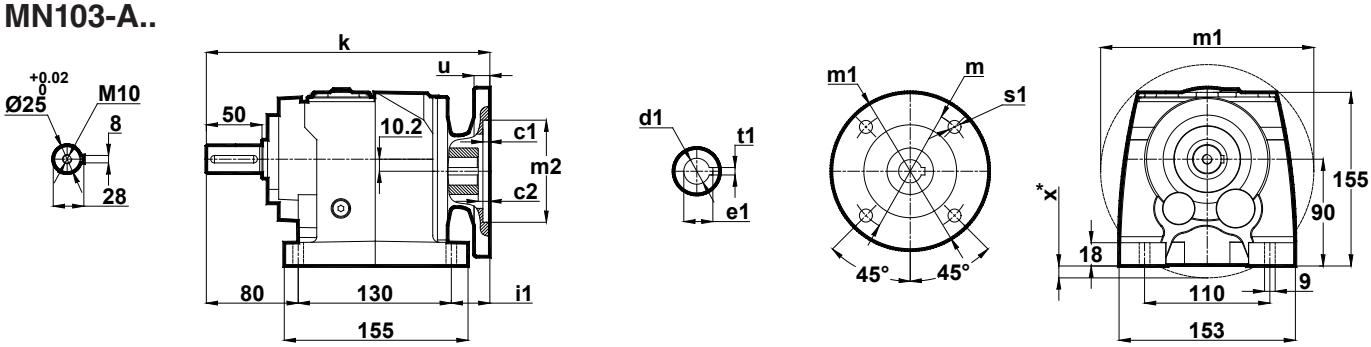

NN102-A..
NN103-A..

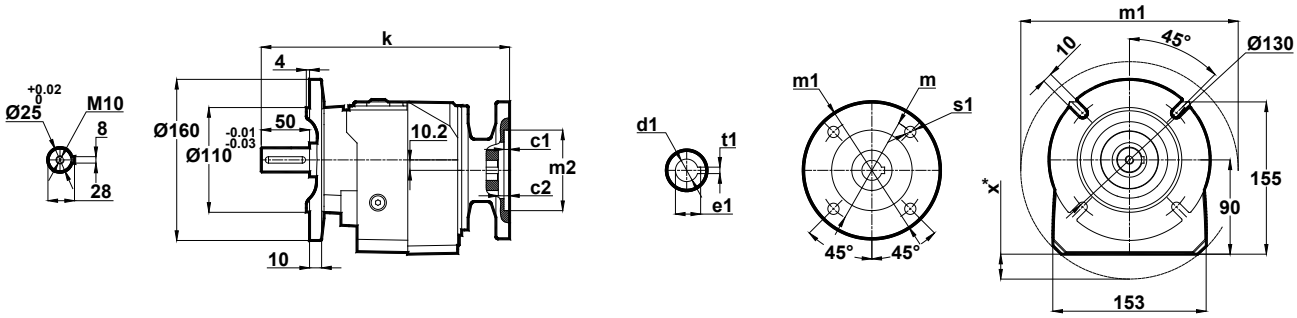

IEC	c1	c2	s1	m	m1	m2	i1	u	k	d1	t1	e1	x
63/B5	3.5	5	10	115	140	95	28.5	12	241	11	4	12.8	-
71/B5	4	4.5	12	130	160	110	28.5	12	242.5	14	5	16.3	0.5
80/B5	4	5	12	165	200	130	43.5	12	257.5	19	6	21.8	20
90/B5	4	5	12	165	200	130	43.5	12	257.5	24	8	27.3	20

Optional Flange Dimensions

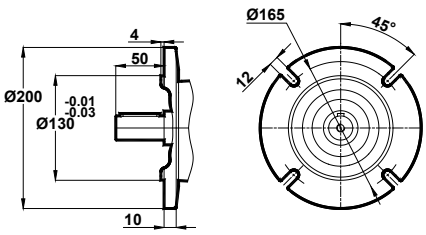

x: If Motor is lower than foot mounting plane

Opt. 1

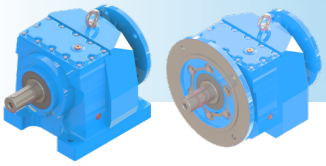

Tapped center hole to DIN 332, sheet 2

MN102-B..
MN103-B..

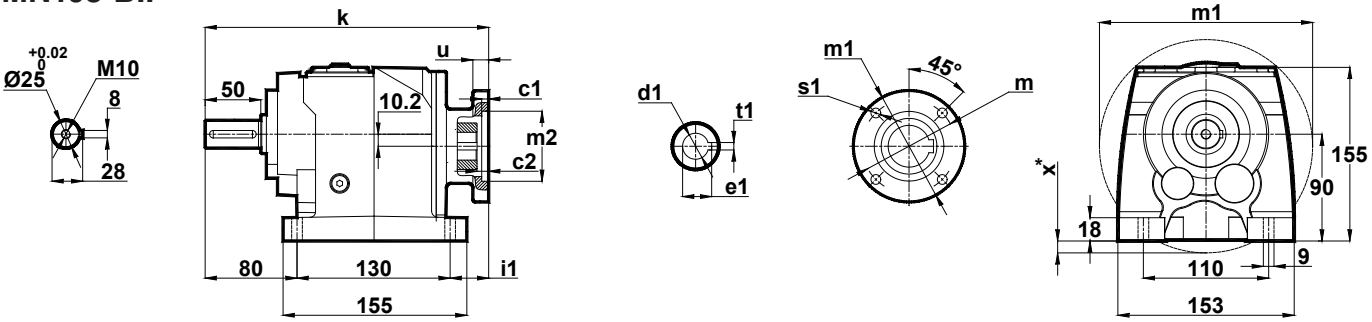

NN102-B..
NN103-B..

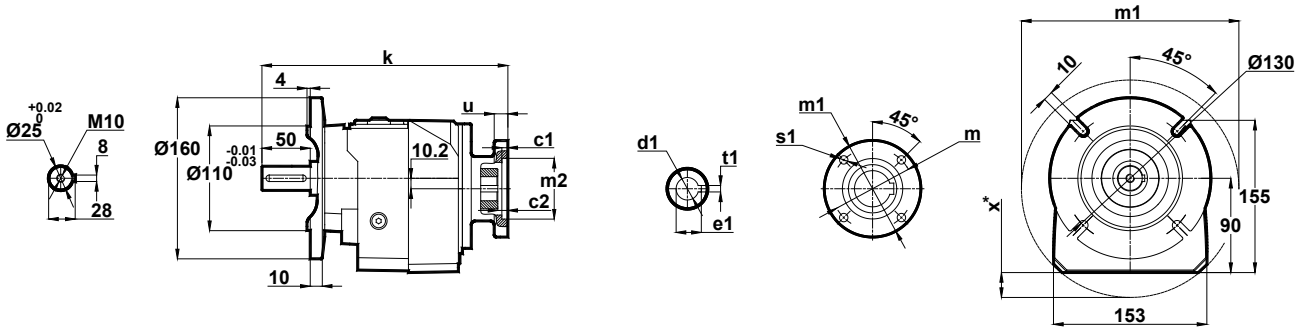

IEC	c1	c2	s1	m	m1	m2	i1	u	k	d1	t1	e1	x
63/B14	2.5	5	5.5	75	90	60	28.5	10	241	11	4	12.8	-
71/B14	3	4.5	7	85	105	70	28.5	10	242.5	14	5	16.3	-
80/B14	4	5	7	100	120	80	43.5	12	257.5	19	6	21.8	-
90/B14	4	5	9	115	140	95	43.5	12	257.5	24	8	27.3	-

Optional Flange Dimensions

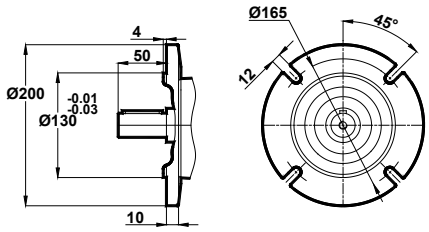

Opt. 1

x: If Motor is lower than foot mounting plane

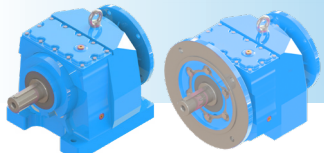

MN / NN - DIMENSION PAGES

Tapped center hole to DIN 332, sheet 2

MN172-A..
MN173-A..

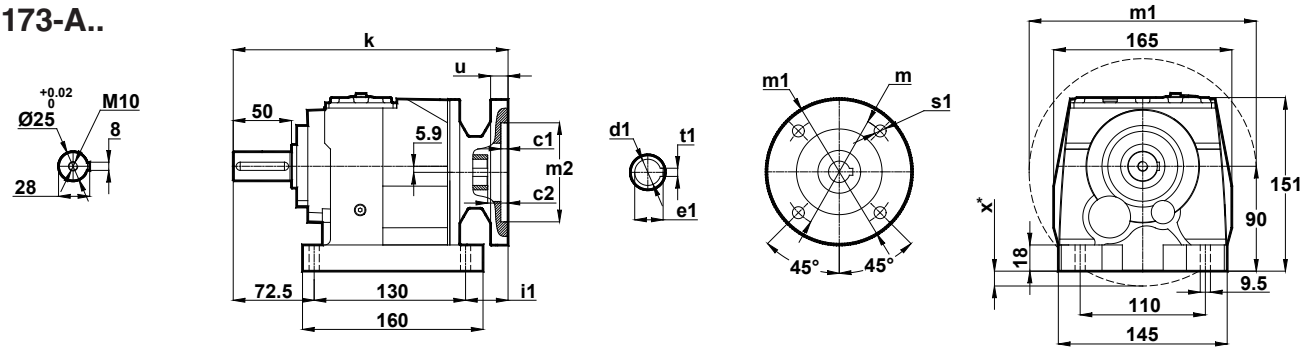

NN172-A..
NN173-A..

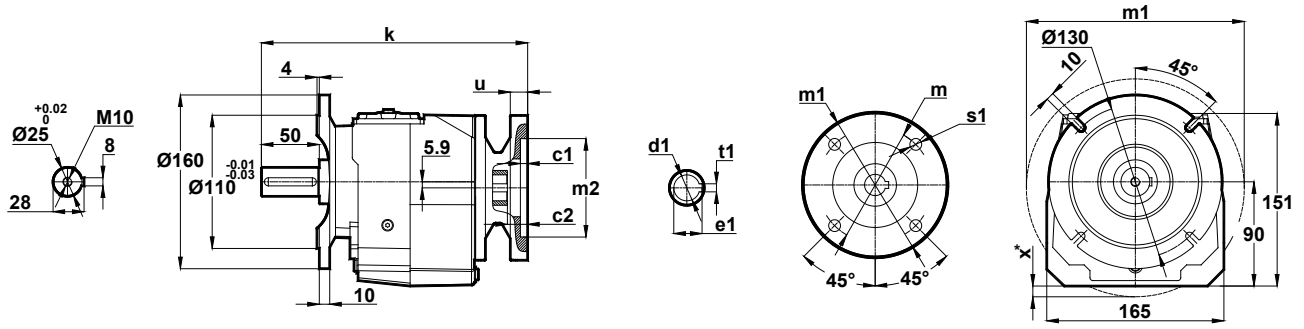

IEC	c1	c2	s1	m	m1	m2	i1	u	k	d1	t1	e1	x
63/B5	3.5	5	10	115	140	95	38.5	10	241	11	4	12.8	-
71/B5	4	4.5	11	130	160	110	40	12	242.5	14	5	16.3	-
80/B5	4	5	12	165	200	130	55	12	257.5	19	6	21.8	16
90/B5	4	5	12	165	200	130	55	12	257.5	24	8	27.3	16
100/B5	4.5	5	15	215	250	180	66	12	268.5	28	8	31.3	41
112/B5	4.5	5	15	215	250	180	66	12	268.5	28	8	31.3	41

Optional Flange Dimensions

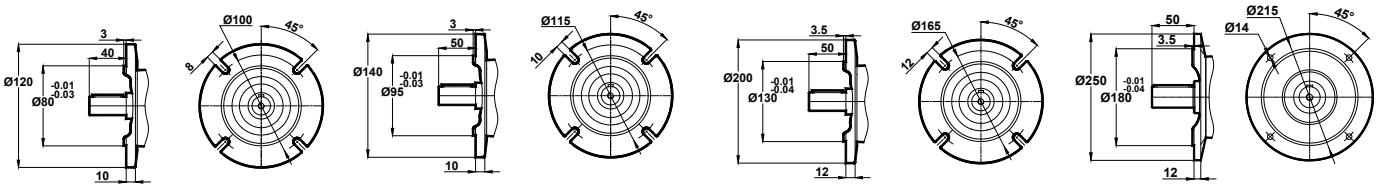

Opt. 1 **Opt. 2** **Opt. 3** **Opt. 4**

x: If Motor is lower than foot mounting plane

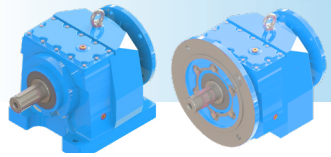

Tapped center hole to DIN 332, sheet 2

MN172-B..
MN173-B..

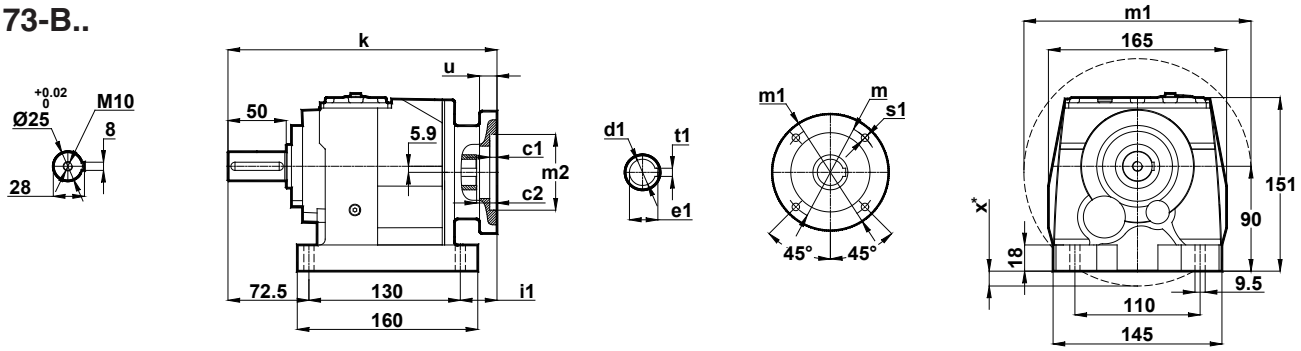

NN172-B..
NN173-B..

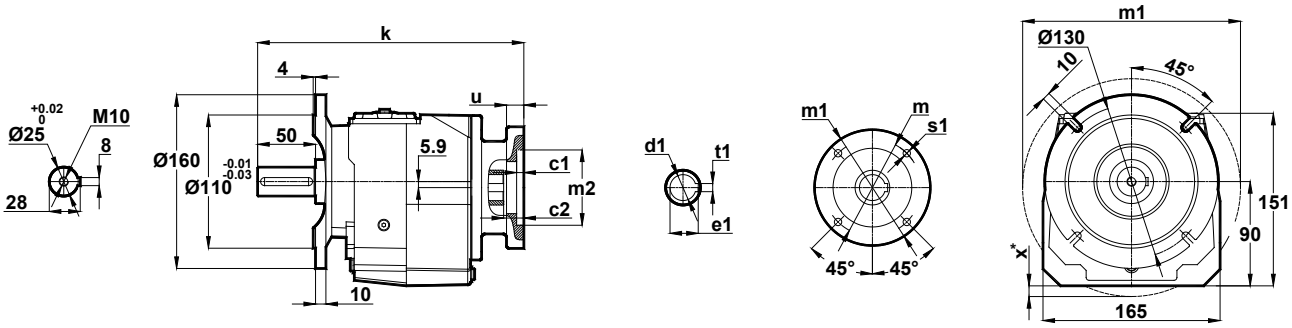

IEC	c1	c2	s1	m	m1	m2	i1	u	k	d1	t1	e1	x
63/B14	2.5	5	5.5	75	90	60	28.5	10	241	11	4	12.8	-
71/B14	3	4.5	7	85	105	70	40	10	242.5	14	5	16.3	-
80/B14	4	5	7	100	120	80	55	12	257.5	19	6	21.8	-
90/B14	4	5	9	115	140	95	55	12	257.5	24	8	27.3	-
100/B14	4	5.5	9	130	160	110	66	12	268.5	28	8	31.3	-
112/B14	4	5.5	9	130	160	110	66	12	268.5	28	8	31.3	-

Optional Flange Dimensions

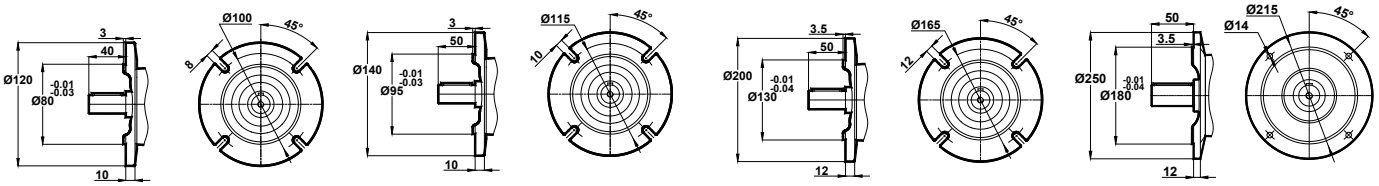

Opt. 1 **Opt. 2** **Opt. 3** **Opt. 4**

x: If Motor is lower than foot mounting plane

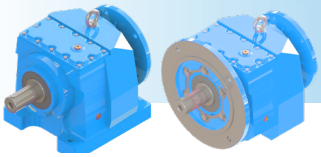

MN / NN - DIMENSION PAGES

Tapped center hole to DIN 332, sheet 2

MN202-A..
MN203-A..

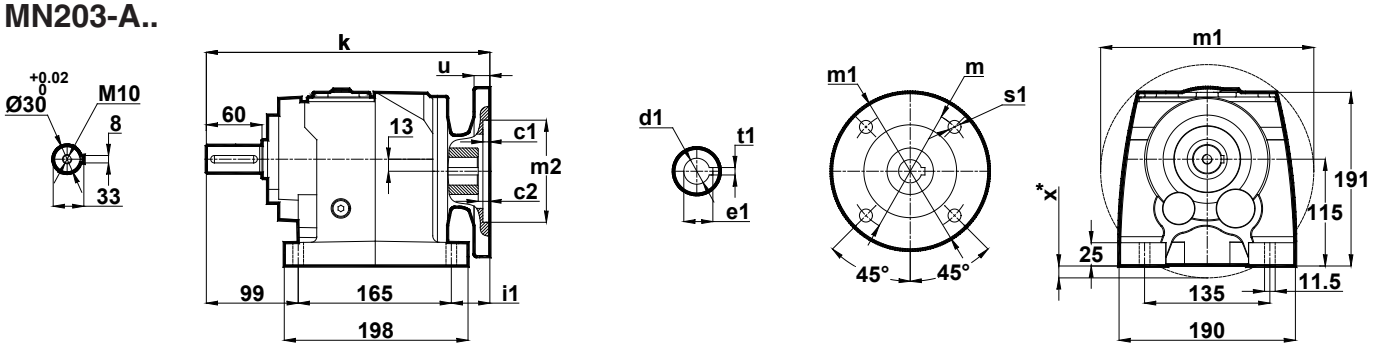

NN202-A..
NN203-A..

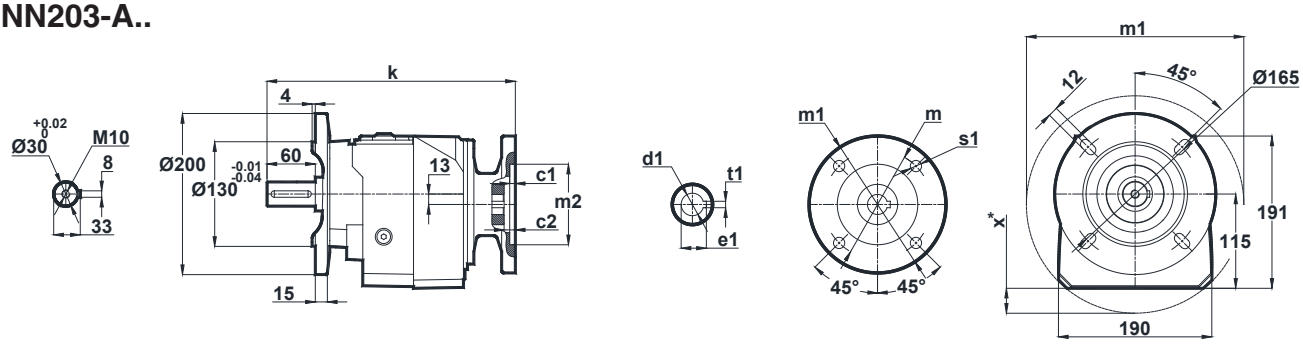

IEC	c1	c2	s1	m	m1	m2	i1	u	k	d1	t1	e1	x
63/B5	4	5	9	115	140	95	58.5	12	322.5	11	4	12.8	-
71/B5	4	8.5	11	130	160	110	29.5	12	293.5	14	5	16.3	-
80/B5	4	5	12	165	200	130	58.5	12	322.5	19	6	21.8	-
90/B5	4	5	12	165	200	130	58.5	12	322.5	24	8	27.3	-
100/B5	4.5	5.5	15	215	250	180	51.5	12	315.5	28	8	31.3	23
112/B5	4.5	5.5	15	215	250	180	51.5	12	315.5	28	8	31.3	23

Optional Flange Dimensions

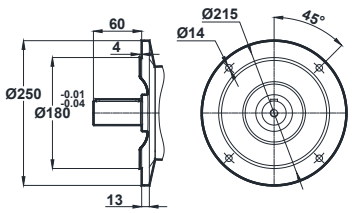

Opt. 1

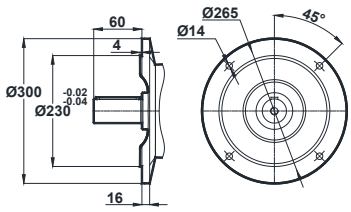

Opt. 2

x: If Motor is lower than foot mounting plane

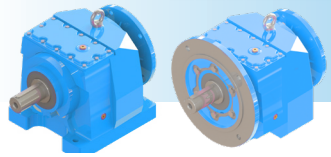

Tapped center hole to DIN 332, sheet 2

MN202-B..
MN203-B..

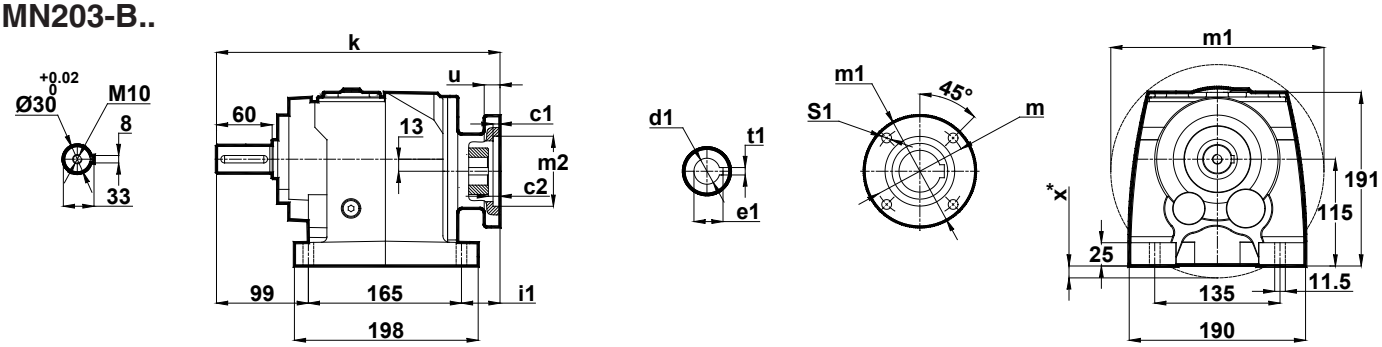

NN202-B..
NN203-B..

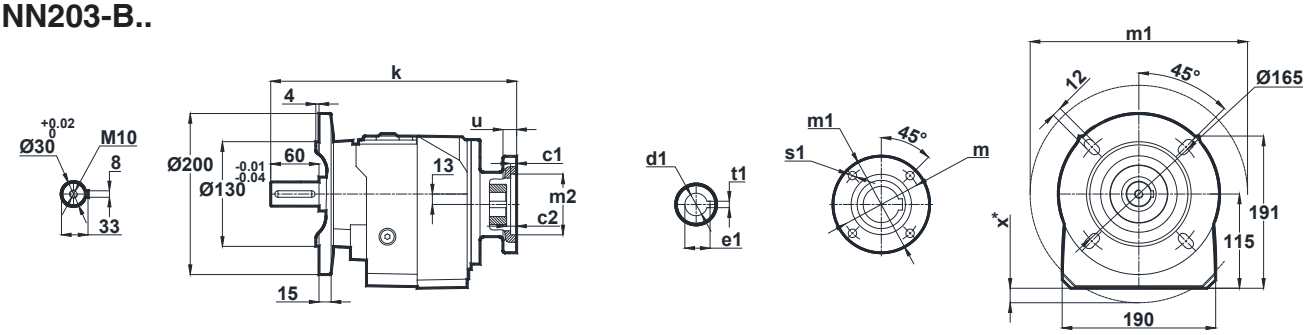

IEC	c1	c2	s1	m	m1	m2	i1	u	k	d1	t1	e1	x
71/B14	3	8.5	7	85	105	70	29.5	10	293.5	14	5	16.3	-
80/B14	4	5	7	100	120	80	58.5	12	322.5	19	6	21.8	-
90/B14	4	5	9	115	140	95	58.5	12	322.5	24	8	27.3	-
100/B14	4	5.5	9	130	160	110	51.5	12	315.5	28	8	31.3	-
112/B14	4	5.5	9	130	160	110	51.5	12	315.5	28	8	31.3	-

Optional Flange Dimensions

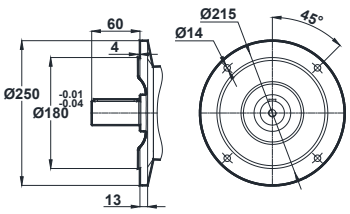

Opt. 1

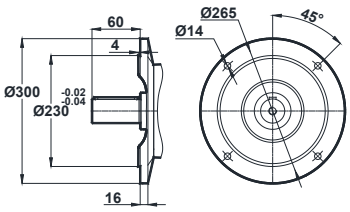

Opt. 2

x: If Motor is lower than foot mounting plane

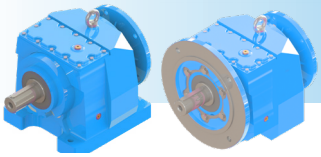

MN / NN - DIMENSION PAGES

Tapped center hole to DIN 332, sheet 2

MN272-A..
MN273-A..

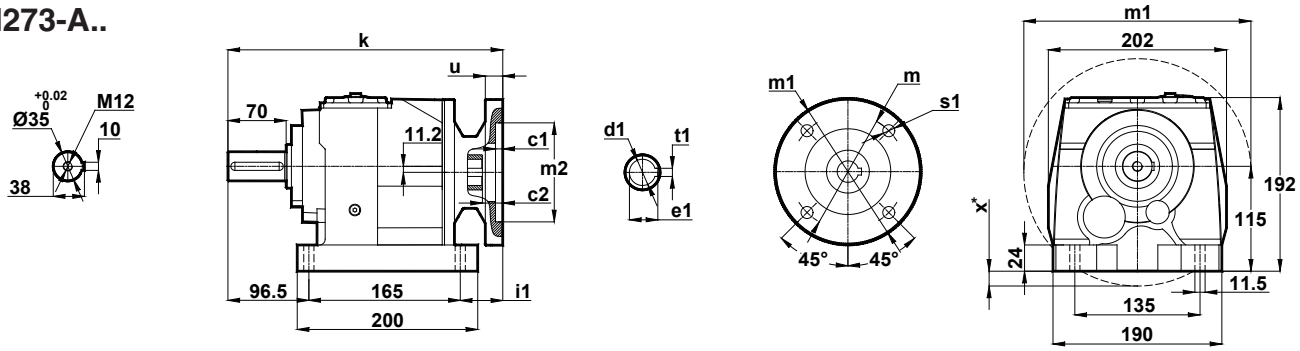

NN272-A..
NN273-A..

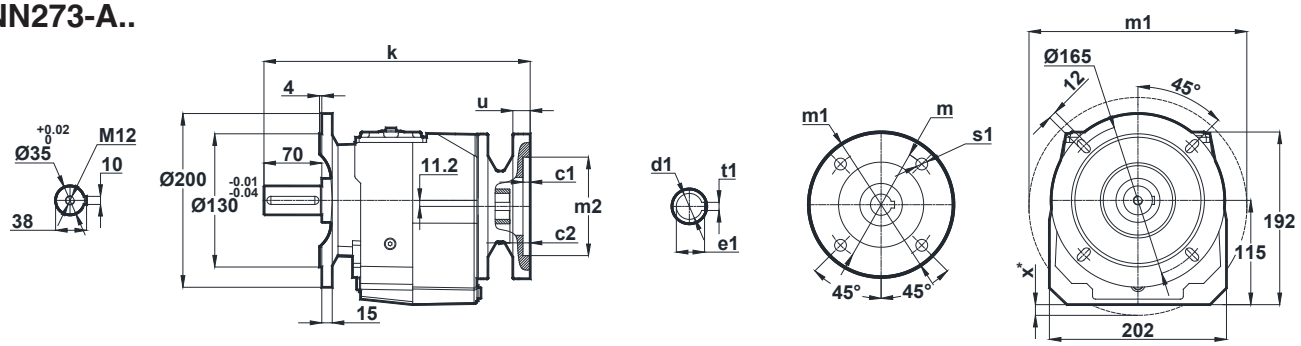

IEC	c1	c2	s1	m	m1	m2	i1	u	k	d1	t1	e1	x
63/B5	4	5	9	115	140	95	62	12	323.5	11	4	12.8	-
71/B5	4	8.5	11	130	160	110	33	12	294.5	14	5	16.3	-
80/B5	4	5	12	165	200	130	62	12	323.5	19	6	21.8	-
90/B5	4	5	12	165	200	130	62	12	323.5	24	8	27.3	-
100/B5	4.5	5.5	15	215	250	180	55	12	316.5	28	8	31.3	22
112/B5	4.5	5.5	15	215	250	180	55	12	316.5	28	8	31.3	22
132/B5	4.5	7	15	265	300	230	92	15	363.5	38	10	41.3	47

Optional Flange Dimensions

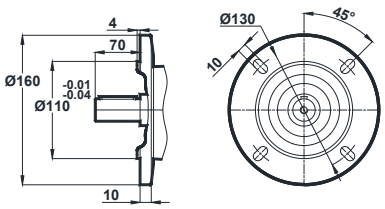

Opt. 1

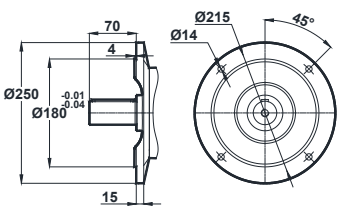

Opt. 2

x: If Motor is lower than foot mounting plane

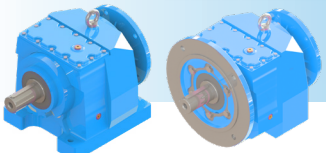

Tapped center hole to DIN 332, sheet 2

MN272-B..
MN273-B..

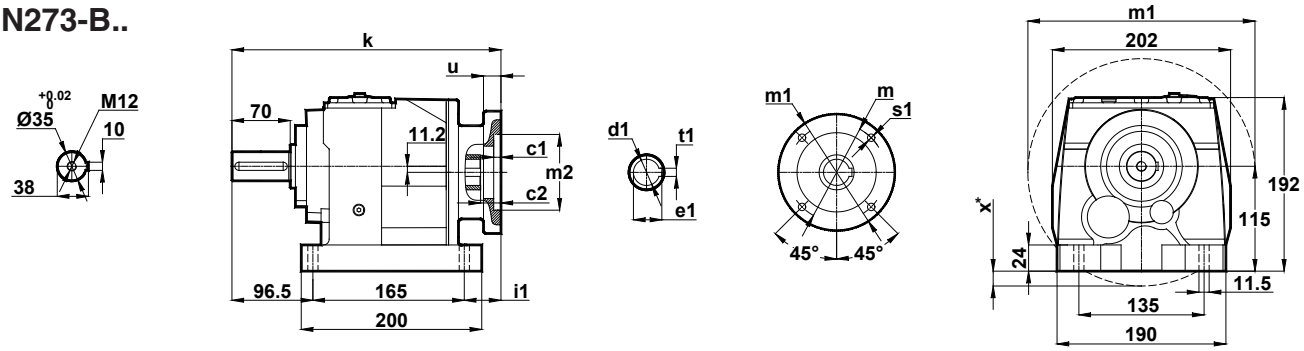

NN272-B..
NN273-B..

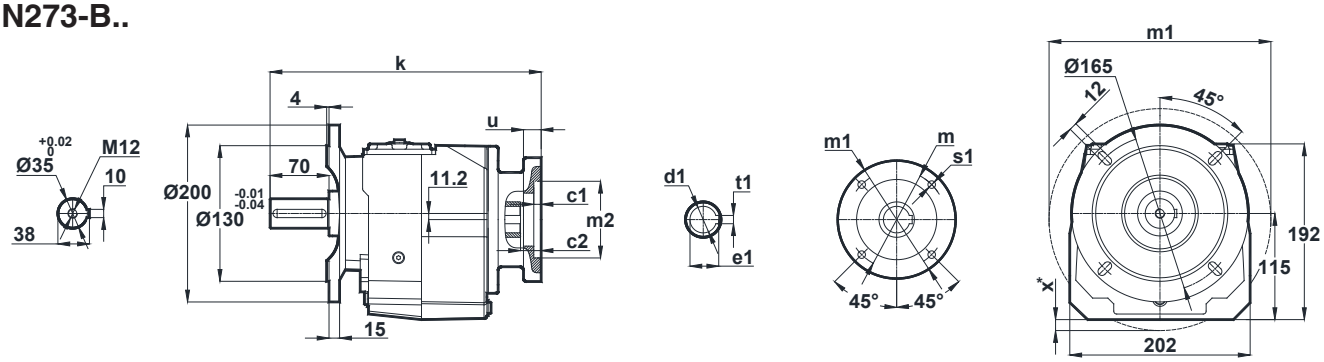

IEC	c1	c2	s1	m	m1	m2	i1	u	k	d1	t1	e1	x
71/B14	3	8.5	7	85	105	70	33	10	294.5	14	5	16.3	-
80/B14	4	5	7	100	120	80	62	12	323.5	19	6	21.8	-
90/B14	4	5	9	115	140	95	62	12	323.5	24	8	27.3	-
100/B14	4	5.5	9	130	160	110	55	12	316.5	28	8	31.3	-
112/B14	4	5.5	9	130	160	110	55	12	316.5	28	8	31.3	-
132/B14	4.5	6	11	165	200	130	92	15	363.5	35	10	41.3	-

Optional Flange Dimensions

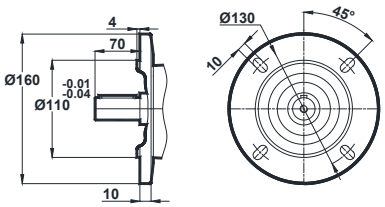

Opt. 1

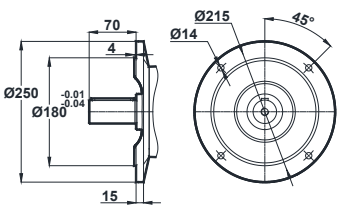

Opt. 2

x: If Motor is lower than foot mounting plane

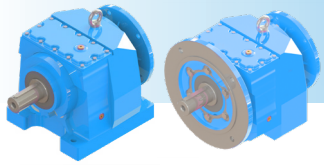

MN / NN - DIMENSION PAGES

Tapped center hole to DIN 332, sheet 2

MN275-A..
MN276-A..

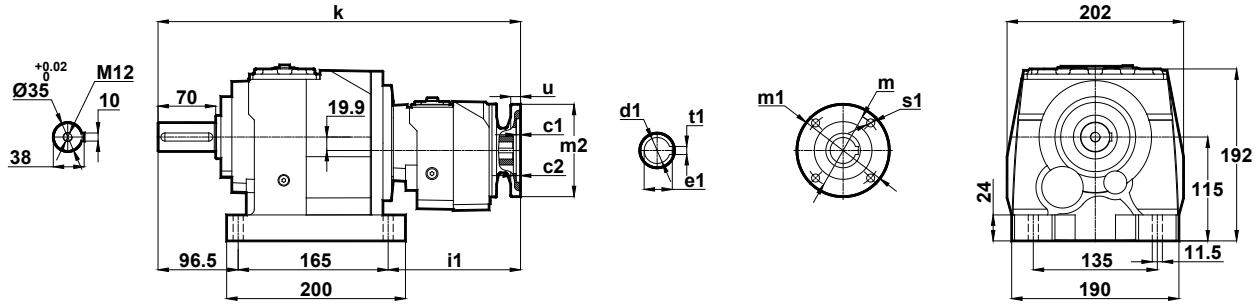

NN275-A..
NN276-A..

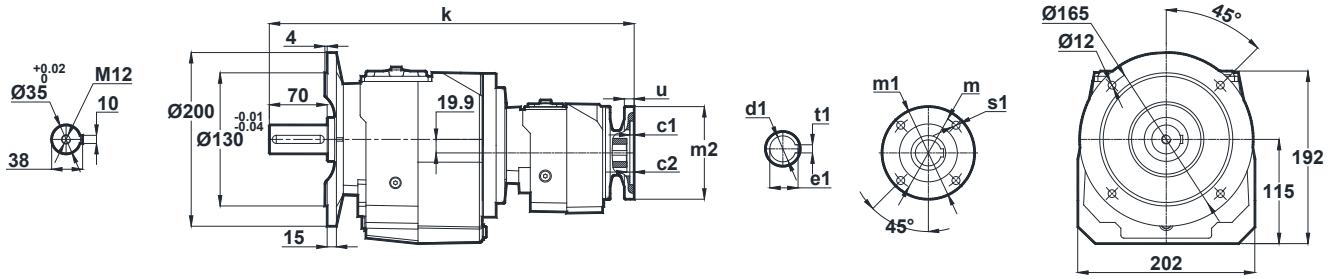

IEC	c1	c2	s1	m	m1	m2	i1	u	k	d1	t1	e1
63/B5	3.5	5	10	115	140	95	177.5	10	439	11	4	12.8
71/B5	4	4.5	11	130	160	110	179	12	440.5	14	5	16.3

Optional Flange Dimensions

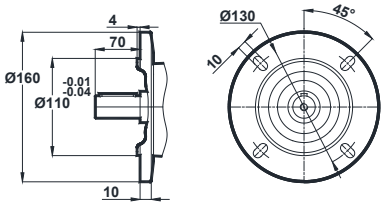

Opt. 1

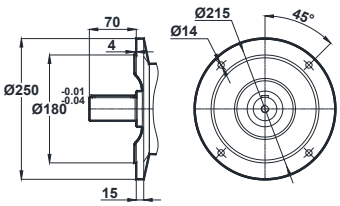

Opt. 2

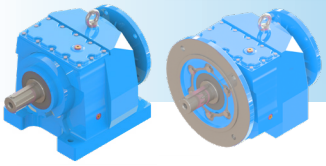

Tapped center hole to DIN 332, sheet 2

MN275-B..
MN276-B..

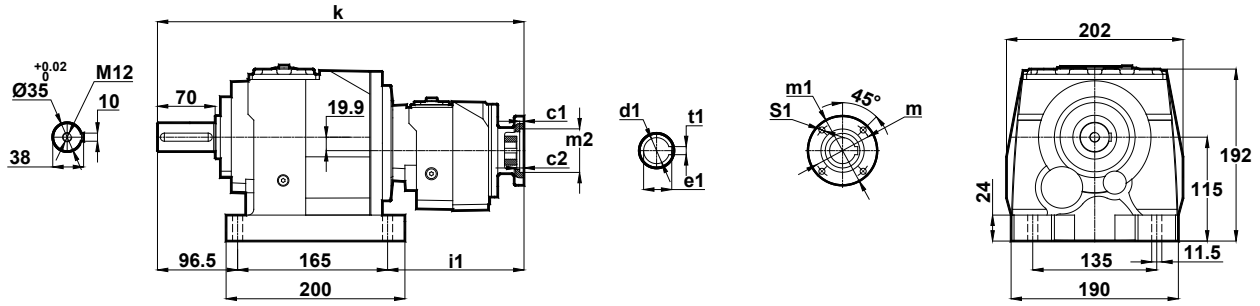

NN275-B..
NN276-B..

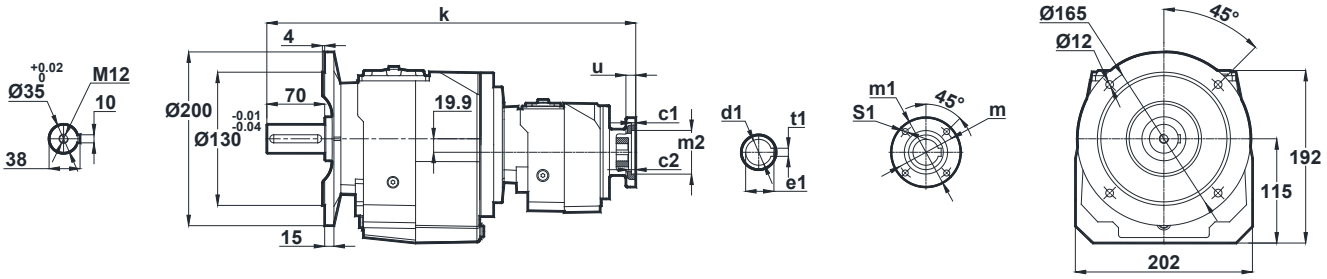

IEC	c1	c2	s1	m	m1	m2	i1	u	k	d1	t1	e1
63/B14	2.5	5	5.5	75	90	60	177.5	10	439	11	4	12.8
71/B14	3	4.5	7	85	105	70	179	10	440.5	14	5	16.3

Optional Flange Dimensions

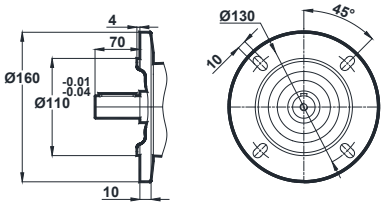

Opt. 1

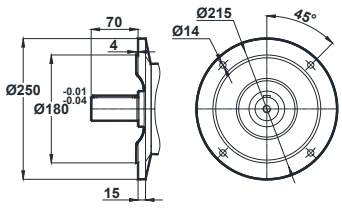

Opt. 2

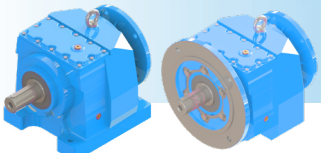

MN / NN - DIMENSION PAGES

Tapped center hole to DIN 332, sheet 2

MN282-A..
MN283-A..

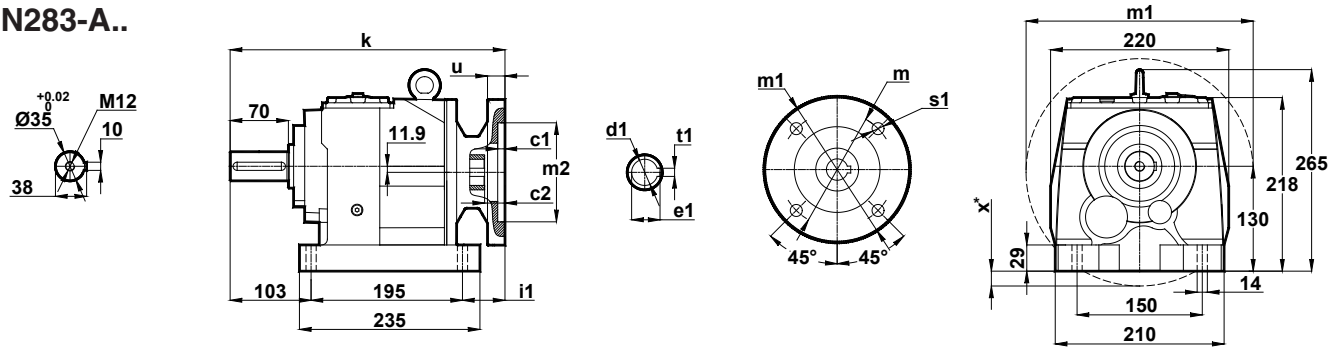

NN282-A..
NN283-A..

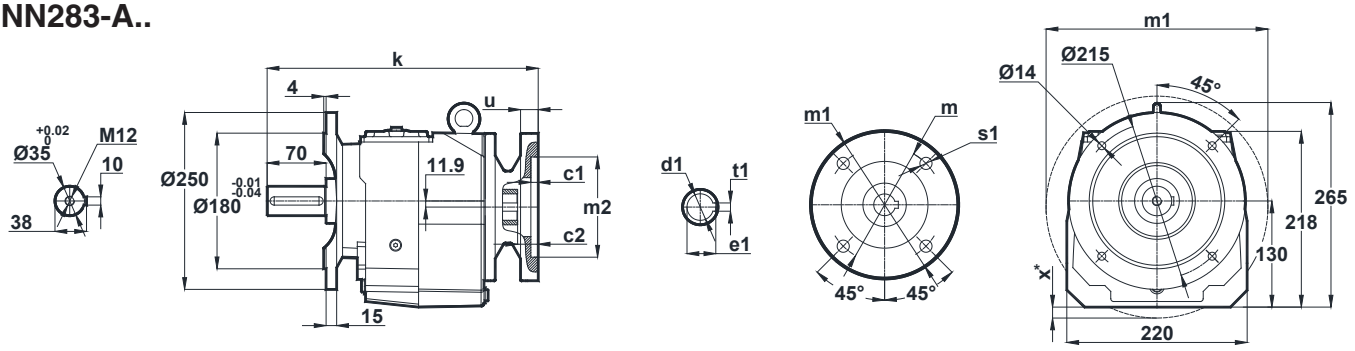

IEC	c1	c2	s1	m	m1	m2	i1	u	k	d1	t1	e1	x
71/B5	4	9	11	130	160	110	45	12	343	14	5	16.3	-
80/B5	4	9	12	165	200	130	45	12	343	19	6	21.8	-
90/B5	4	9	12	165	200	130	45	12	343	24	8	27.3	-
100/B5	4.5	9	15	215	250	180	52	15	360	28	8	31.3	7
112/B5	4.5	9	15	215	250	180	52	15	360	28	8	31.3	7
132/B5	4.5	7	15	265	300	230	82	15	380	38	10	41.3	32

Optional Flange Dimensions

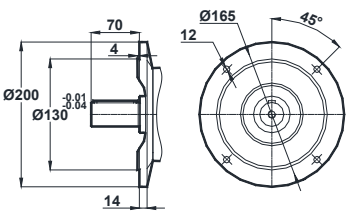

Opt. 1

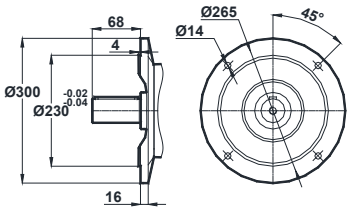

Opt. 2

x: If Motor is lower than foot mounting plane

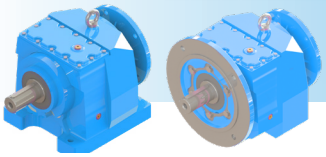

Tapped center hole to DIN 332, sheet 2

MN282-B..
MN283-B..

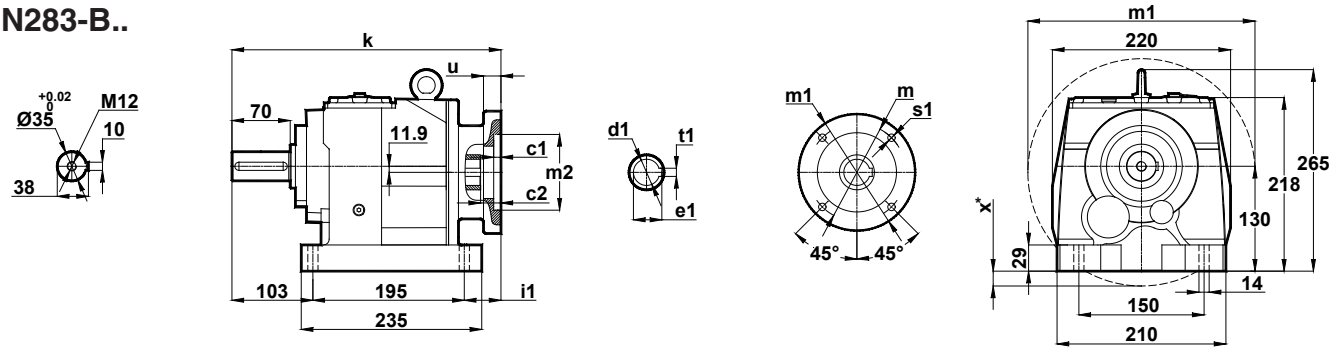

NN282-B..
NN283-B..

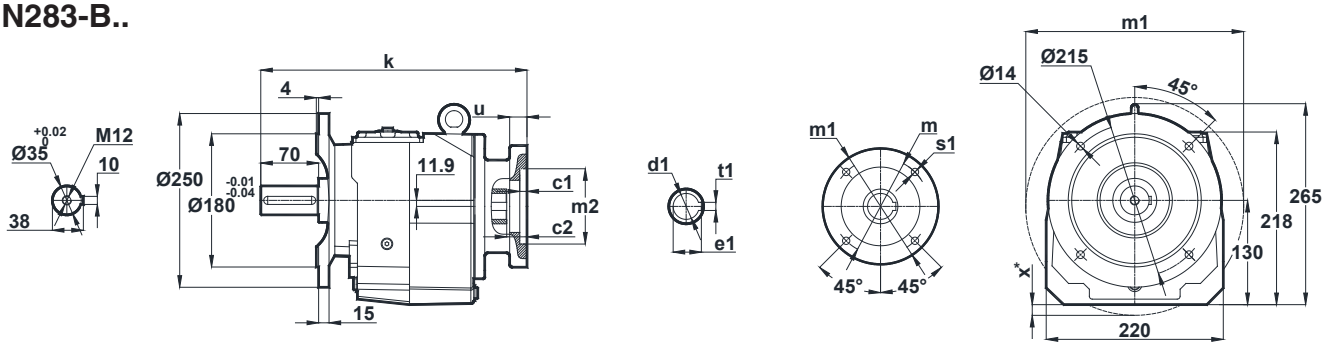

IEC	c1	c2	s1	m	m1	m2	i1	u	k	d1	t1	e1	x
80/B14	4	9	7	100	120	80	45	12	343	19	6	21.8	-
90/B14	4	9	9	115	140	95	45	12	343	24	8	26.3	-
100/B14	4	9	9	130	160	110	52	15	360	28	8	31.3	-
112/B14	4	9	9	130	160	110	52	15	360	28	8	31.3	-
132/B14	4.5	7	11	165	200	130	82	15	380	38	10	41.3	-

Optional Flange Dimensions

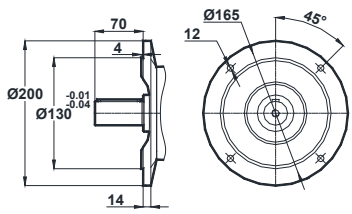

Opt. 1

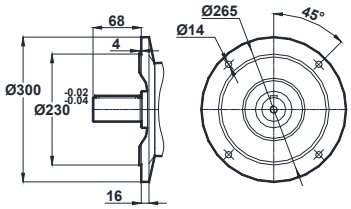

Opt. 2

x: If Motor is lower than foot mounting plane

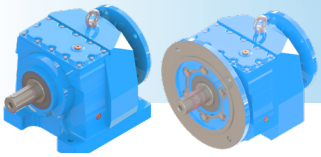

MN / NN - DIMENSION PAGES

Tapped center hole to DIN 332, sheet 2

MN284-A..
MN284-B..

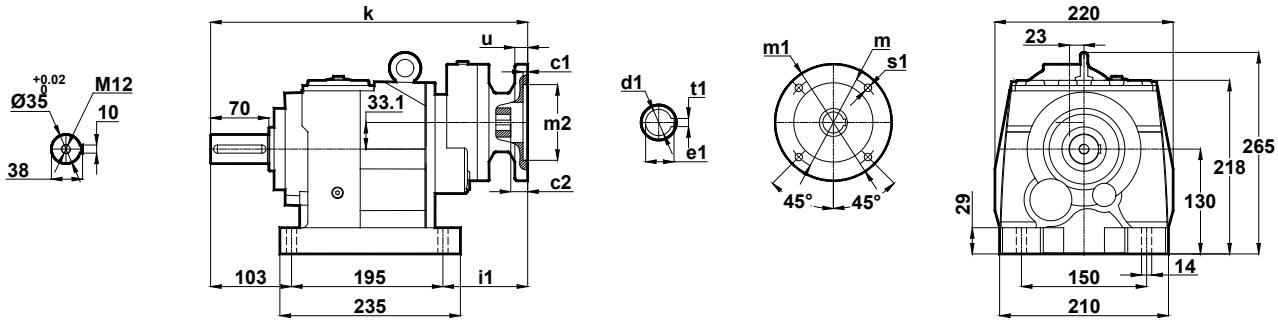

NN284-A..
NN284-B..

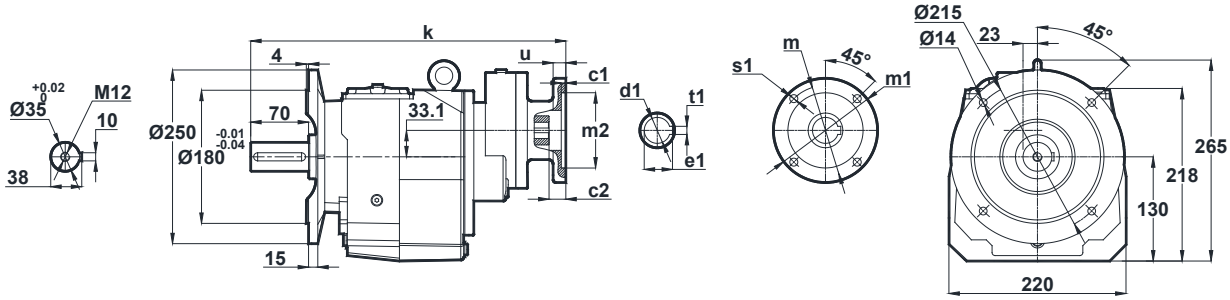

IEC	c1	c2	s1	m	m1	m2	i1	u	k	d1	t1	e1
63/B5	3.5	5	10	115	140	95	122	10	420	11	4	12.8
71/B5	4	4.5	11	130	160	110	93	12	391	14	5	16.3
71/B14	3	4.5	7	85	105	70	93	10	391	14	5	16.3

Optional Flange Dimensions

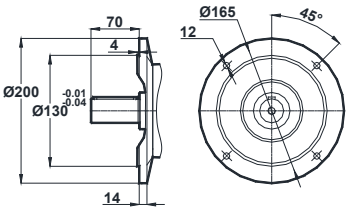

Opt. 1

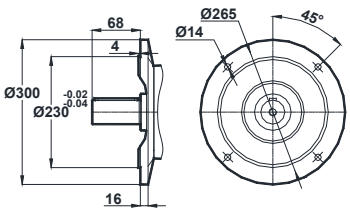

Opt. 2

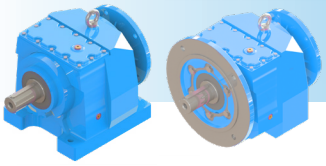

Tapped center hole to DIN 332, sheet 2

MN285-A.. / B..
MN286-A.. / B..

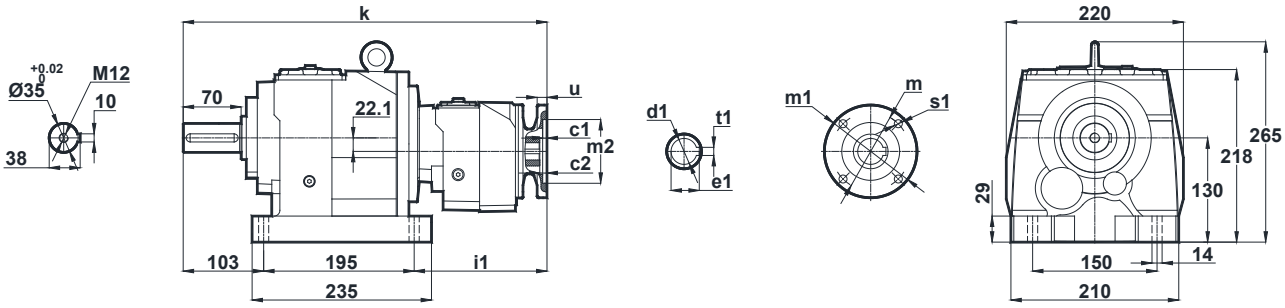

NN285-A.. / B..
NN286-A.. / B..

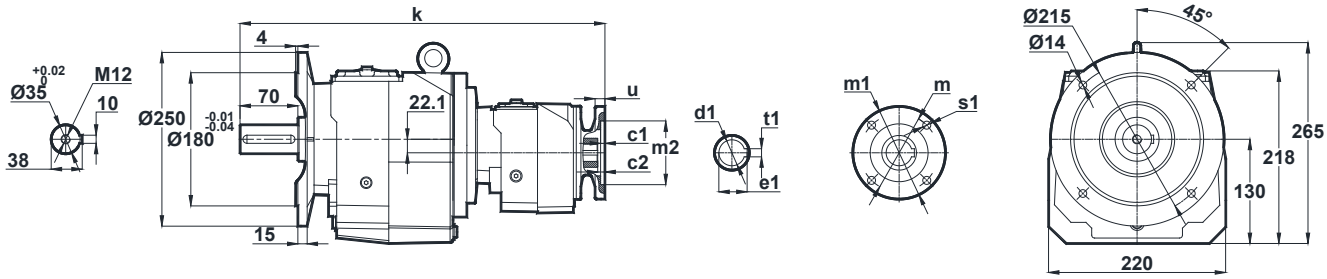

IEC	c1	c2	s1	m	m1	m2	i1	u	k	d1	t1	e1
63/B5	3.5	5	10	115	140	95	188	12	488	11	4	12.8
63/B14	2.5	5	5.5	75	90	60	188	10	488	11	4	12.8

Optional Flange Dimensions

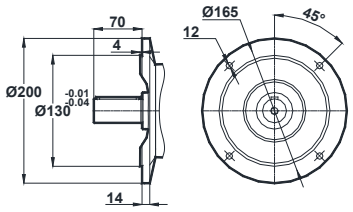

Opt. 1

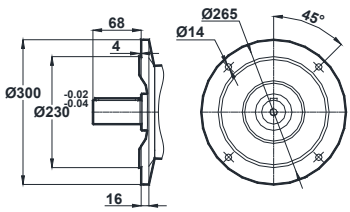

Opt. 2

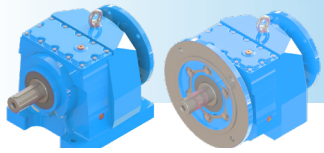

MN / NN - DIMENSION PAGES

Tapped center hole to DIN 332, sheet 2

MN372-A..
MN373-A..

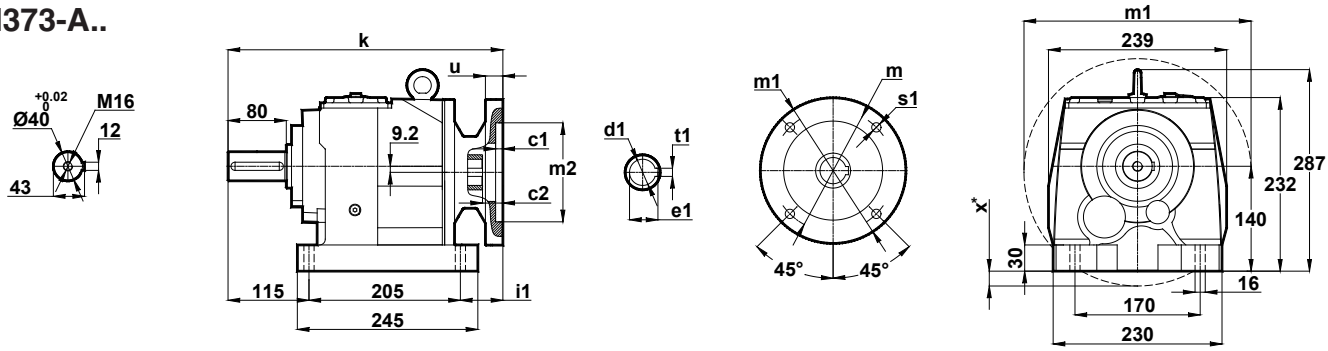

NN372-A..
NN373-A..

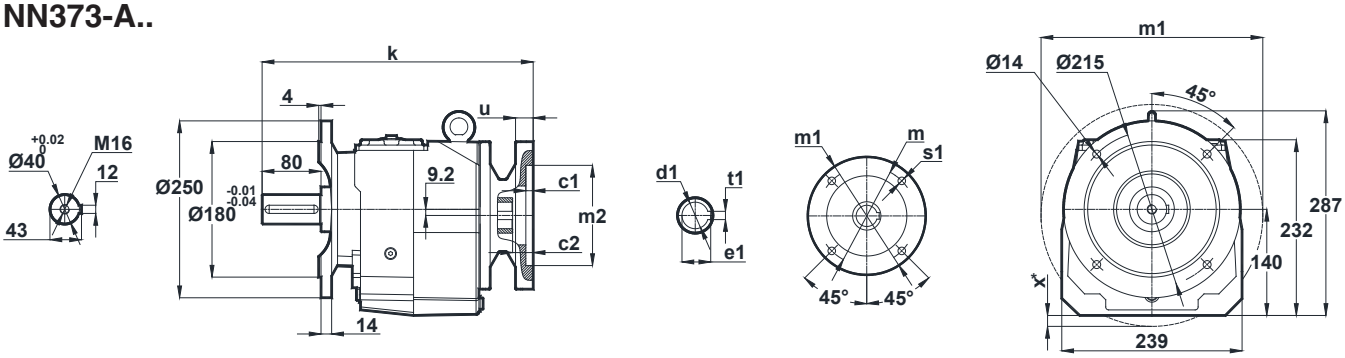

IEC	c1	c2	s1	m	m1	m2	i1	u	k	d1	t1	e1	x
71/B5	4	9	11	130	160	110	43.5	12	364	14	5	16.3	-
80/B5	4	9	12	165	200	130	43.5	12	364	19	6	21.8	-
90/B5	4	9	12	165	200	130	43.5	12	364	24	8	27.3	-
100/B5	4.5	9	15	215	250	180	60.5	15	381	28	8	31.3	-
112/B5	4.5	9	15	215	250	180	60.5	15	381	28	8	31.3	-
132/B5	4.5	7	15	265	300	230	80.5	15	401	38	10	41.3	20

Optional Flange Dimensions

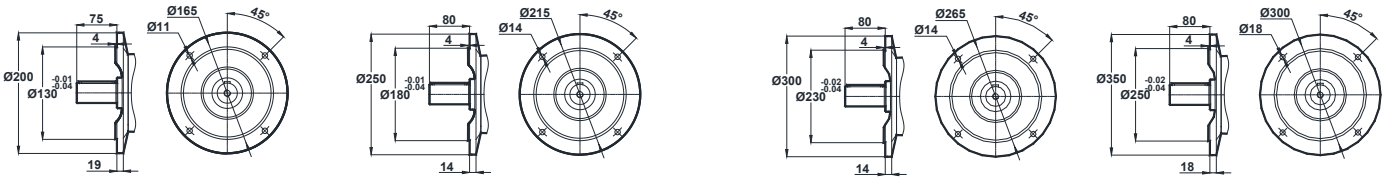

Opt. 1 **Opt. 2** **Opt. 3** **Opt. 4**

x: If Motor is lower than foot mounting plane

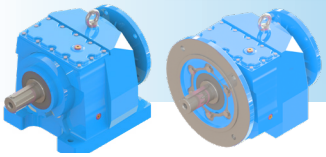

Tapped center hole to DIN 332, sheet 2

MN372-B..
MN373-B..

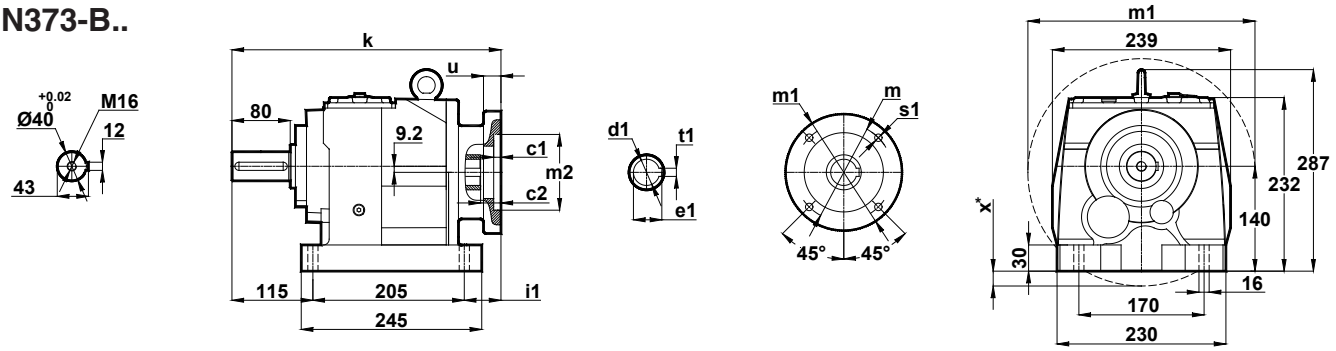

NN372-B..
NN373-B..

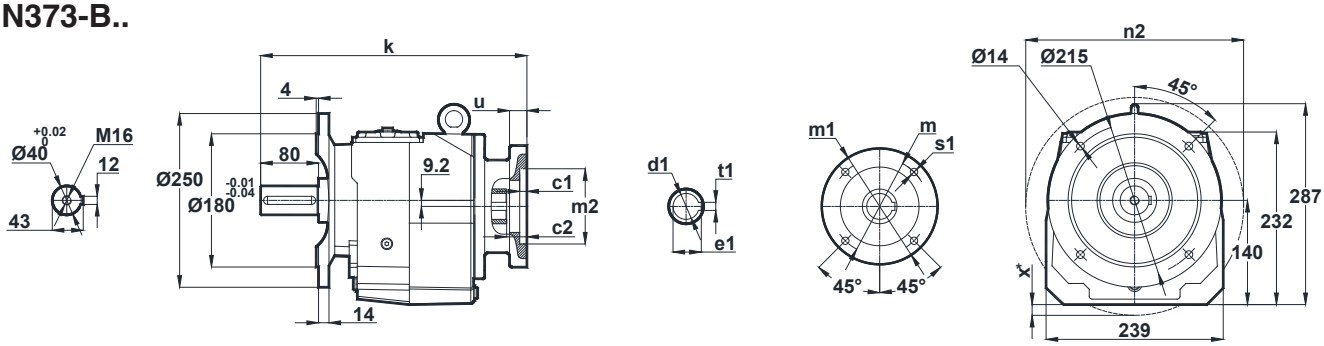

IEC	c1	c2	s1	m	m1	m2	i1	u	k	d1	t1	e1	x
80/B14	4	9	7	100	120	80	43.5	12	364	19	6	21.8	-
90/B14	4	9	9	115	140	95	43.5	12	364	24	8	27.3	-
100/B14	4	9	9	130	160	110	60.5	15	381	28	8	31.3	-
112/B14	4	9	9	130	160	110	60.5	15	381	28	8	31.3	-
132/B14	4.5	9	11	165	200	130	80.5	15	401	38	10	41.3	-

Optional Flange Dimensions

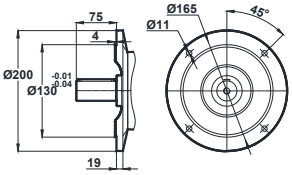

Opt. 1

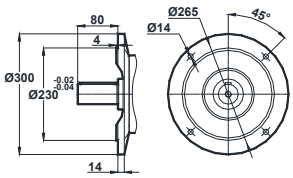

Opt. 2

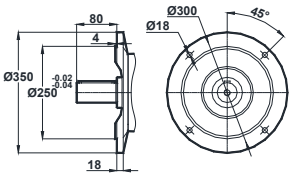

Opt. 3

x: If Motor is lower than foot mounting plane

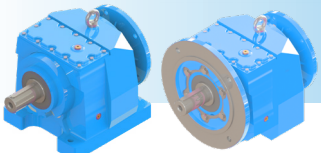

MN / NN - DIMENSION PAGES

Tapped center hole to DIN 332, sheet 2

MN374-A..
MN374-B..

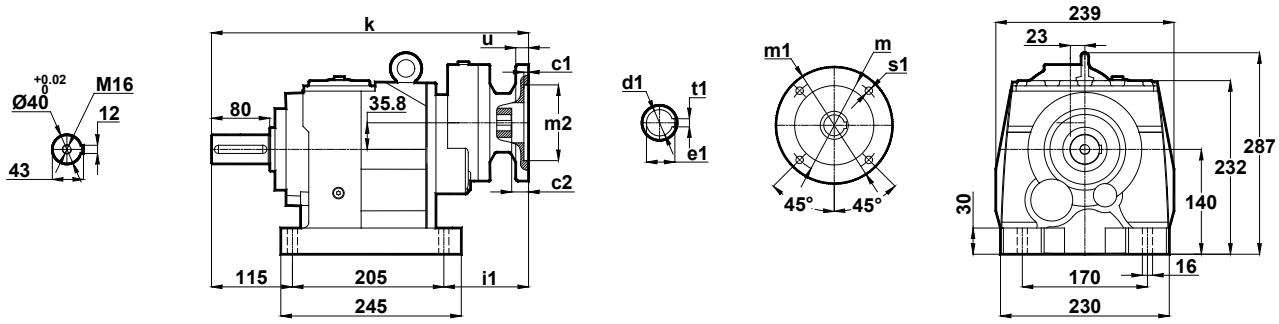

NN374-A..
NN374-B..

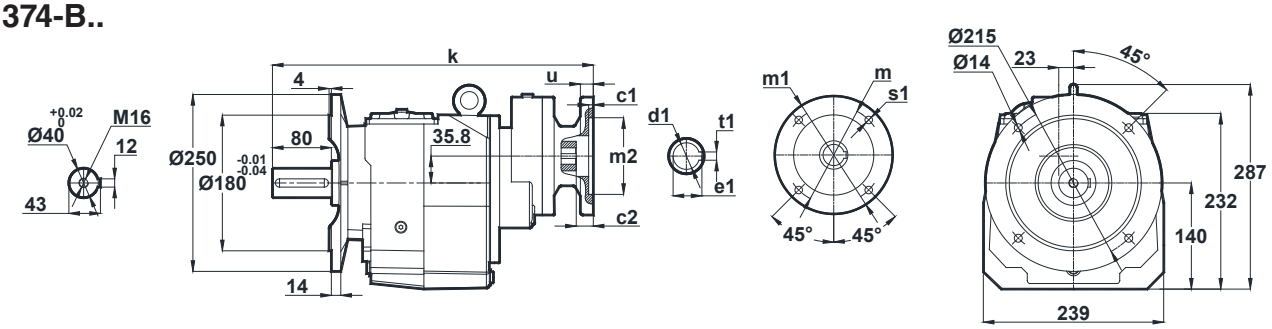

IEC	c1	c2	s1	m	m1	m2	i1	u	k	d1	t1	e1
63/B5	4	5	9	115	140	95	120.5	12	441	11	4	12.8
71/B5	4	8.5	11	130	160	110	91.5	12	412	14	5	16.3
80/B5	4	5	12	165	200	130	120.5	12	441	19	6	21.8
71/B14	3	8.5	7	85	105	70	91.5	10	412	14	5	16.3
80/B14	4	5	7	100	120	80	120.5	12	441	19	6	21.8

Optional Flange Dimensions

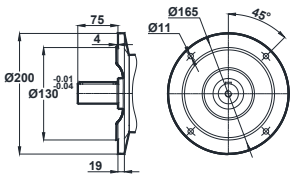

Opt. 1

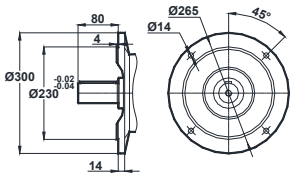

Opt. 2

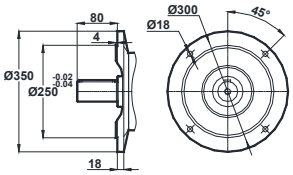

Opt. 3

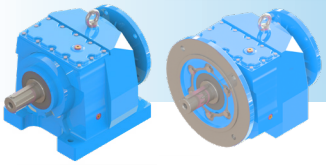

Tapped center hole to DIN 332, sheet 2

MN375-A.. / B..
MN376-A.. / B..

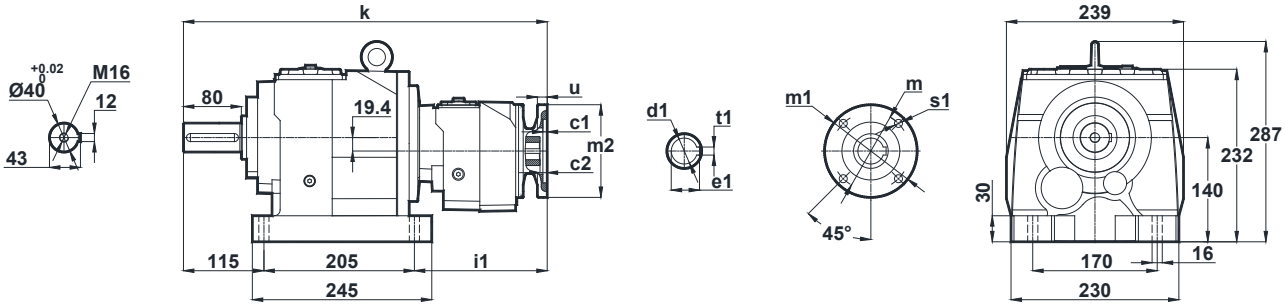

NN375-A.. / B..
NN376-A.. / B..

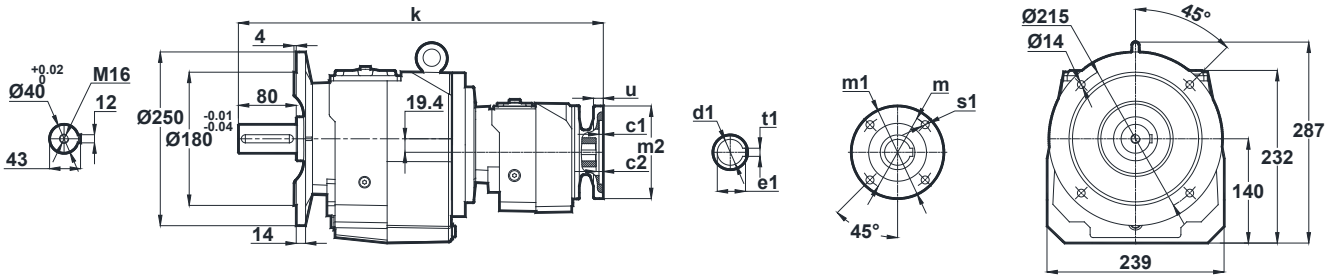

IEC	c1	c2	s1	m	m1	m2	i1	u	k	d1	t1	e1
63/B5	3.5	5	10	115	140	95	186.5	10	509	11	4	12.8
63/B14	2.5	5	5.5	75	90	60	186.5	10	509	11	4	12.8

Optional Flange Dimensions

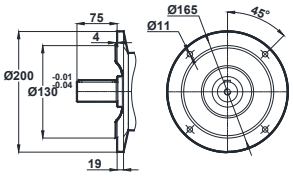

Opt. 1

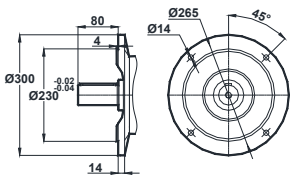

Opt. 2

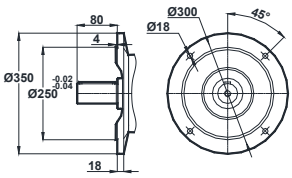

Opt. 3

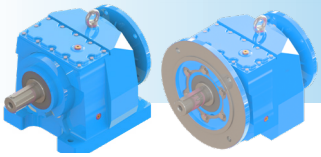

MN / NN - DIMENSION PAGES

Tapped center hole to DIN 332, sheet 2

MN472-A..
MN473-A..

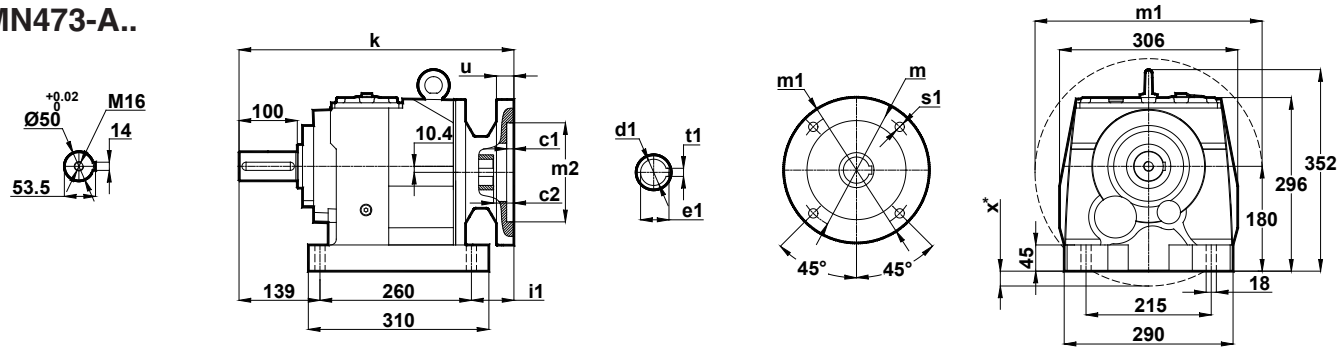

NN472-A..
NN473-A..

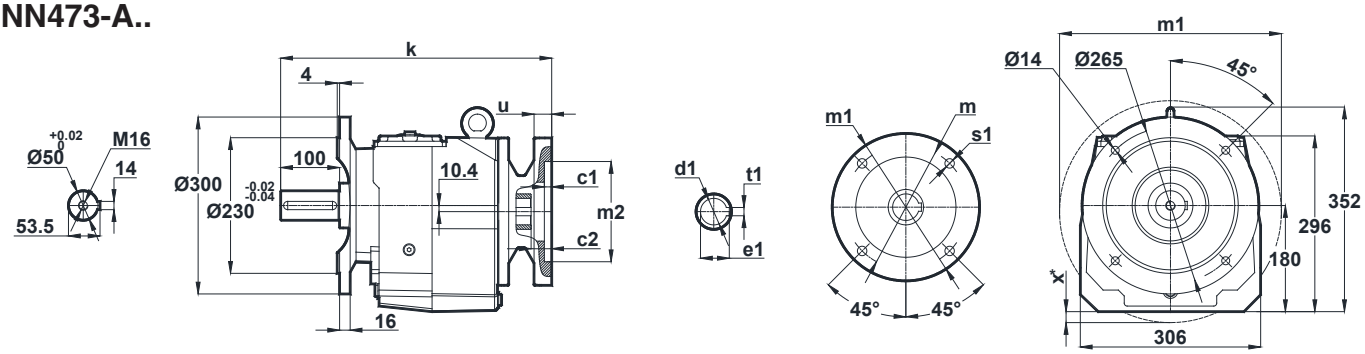

IEC	c1	c2	s1	m	m1	m2	i1	u	k	d1	t1	e1	x
80/B5	4	5	12	165	200	130	27.5	12	426.5	19	6	21.8	-
90/B5	4	5	12	165	200	130	27.5	12	426.5	24	8	27.3	-
100/B5	4.5	9	15	215	250	180	46	15	445	28	8	31.3	-
112/B5	4.5	9	15	215	250	180	46	15	445	28	8	31.3	-
132/B5	4.5	6	15	265	300	230	64.5	15	463.5	38	10	41.3	-
160/B5	5.5	10	19	300	350	250	144	20	543	42	12	45.3	6
180/B5	5.5	10	19	300	350	250	144	20	543	48	14	51.8	6

Optional Flange Dimensions

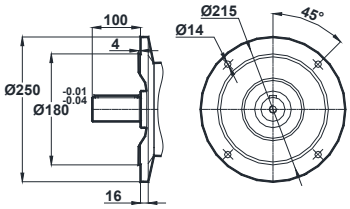

Opt. 1

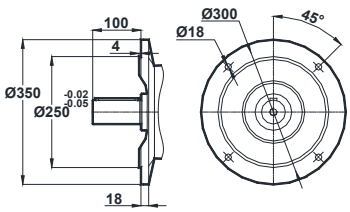

Opt. 2

x: If Motor is lower than foot mounting plane

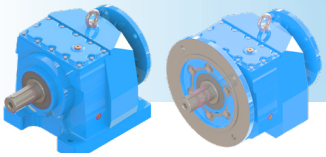

Tapped center hole to DIN 332, sheet 2

MN472-B..
MN473-B..

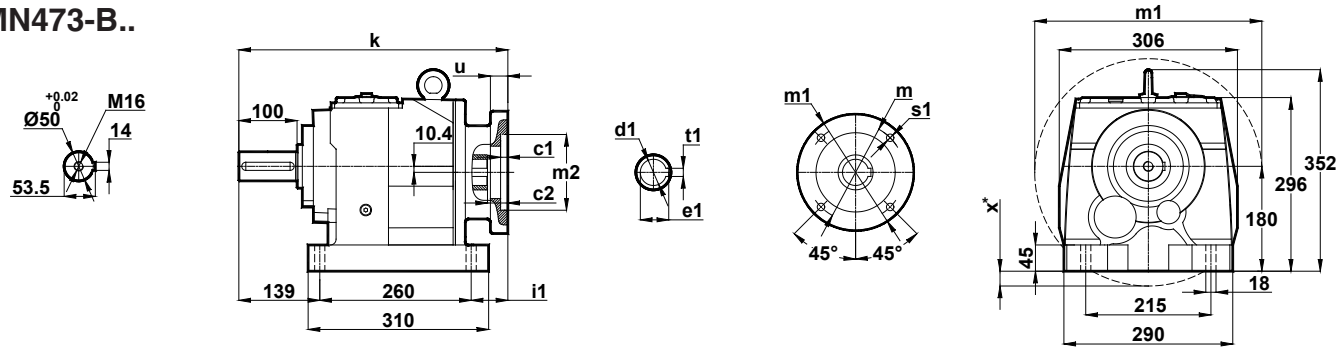

NN472-B..
NN473-B..

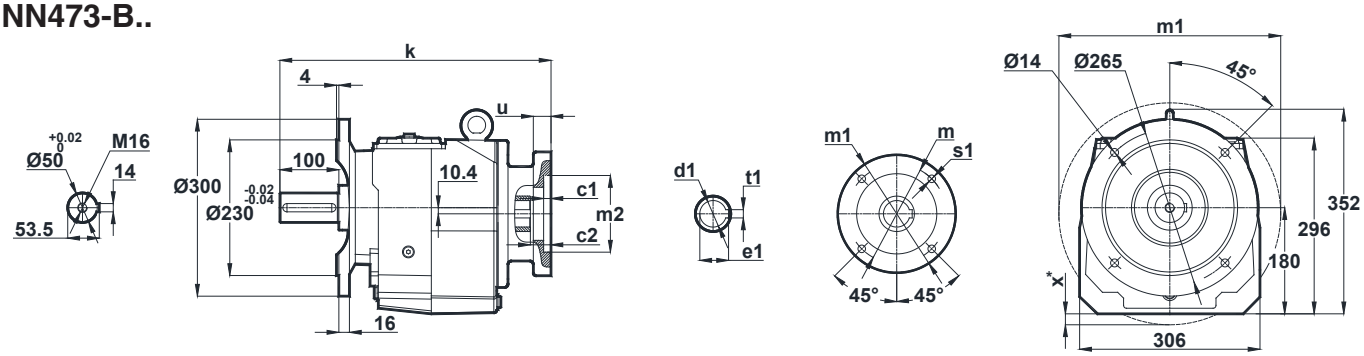

IEC	c1	c2	s1	m	m1	m2	i1	u	k	d1	t1	e1	x
90/B14	4	5	9	115	140	95	27.5	12	426.5	24	8	27.3	-
100/B14	4	9	9	130	160	110	46	15	445	28	8	31.3	-
112/B14	4	9	9	130	160	110	46	15	445	28	8	31.3	-
132/B14	4.5	6	11	165	200	130	64.5	15	463.5	38	10	41.3	-

Optional Flange Dimensions

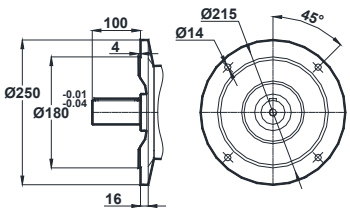

Opt. 1

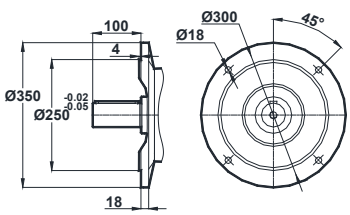

Opt. 2

x: If Motor is lower than foot mounting plane

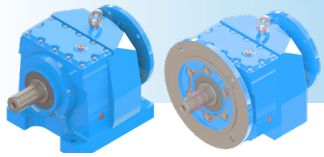

MN / NN - DIMENSION PAGES

Tapped center hole to DIN 332, sheet 2

MN474-A..
MN474-B..

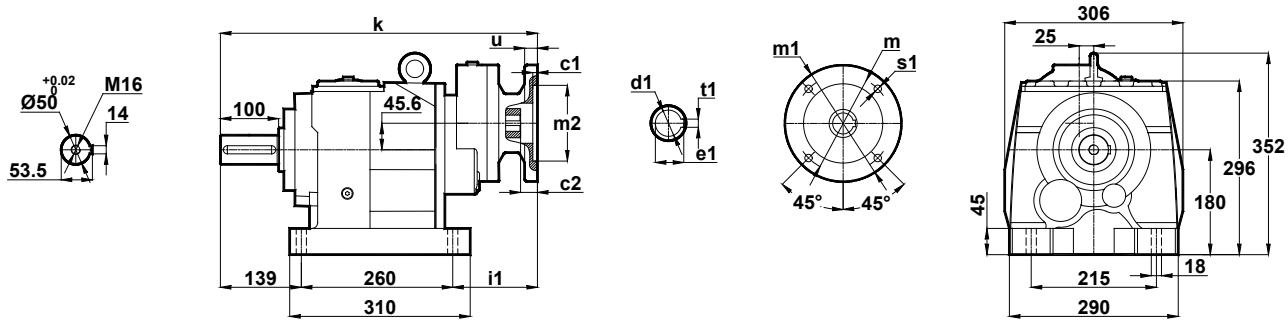

NN474-A..
NN474-B..

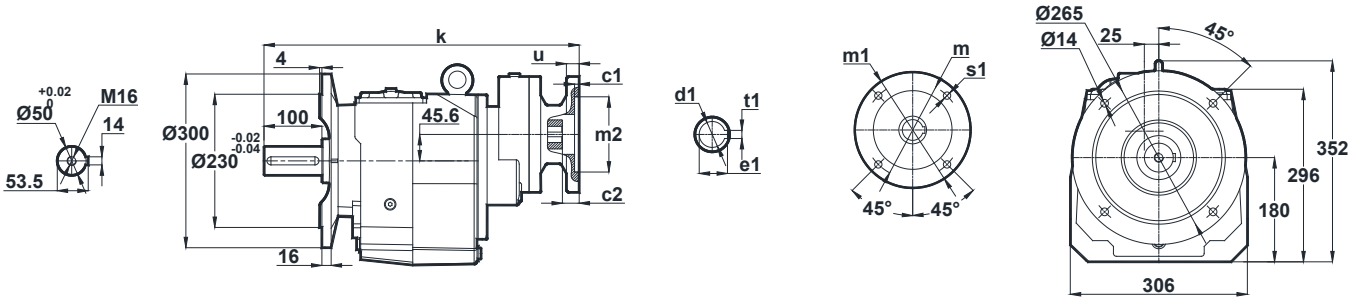

IEC	c1	c2	s1	m	m1	m2	i1	u	k	d1	t1	e1
71/B5	4	9	11	130	160	110	125.5	12	524.5	14	5	16.3
80/B5	4	9	12	165	200	130	125.5	12	524.5	19	6	21.8
80/B14	4	9	7	100	120	80	125.5	12	524.5	19	6	21.8

Optional Flange Dimensions

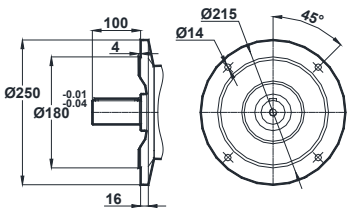

Opt. 1

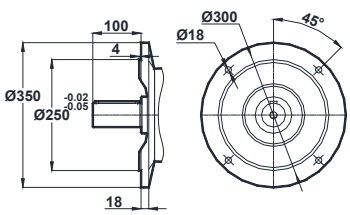

Opt. 2

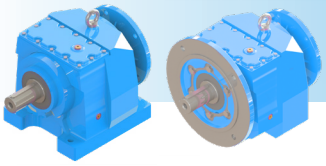

Tapped center hole to DIN 332, sheet 2

MN475-A.. / B..
MN476-A.. / B..

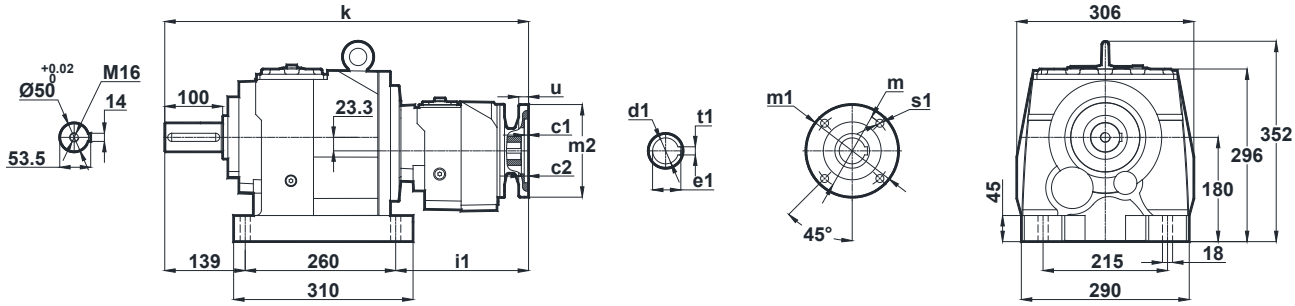

NN475-A.. / B..
NN476-A.. / B..

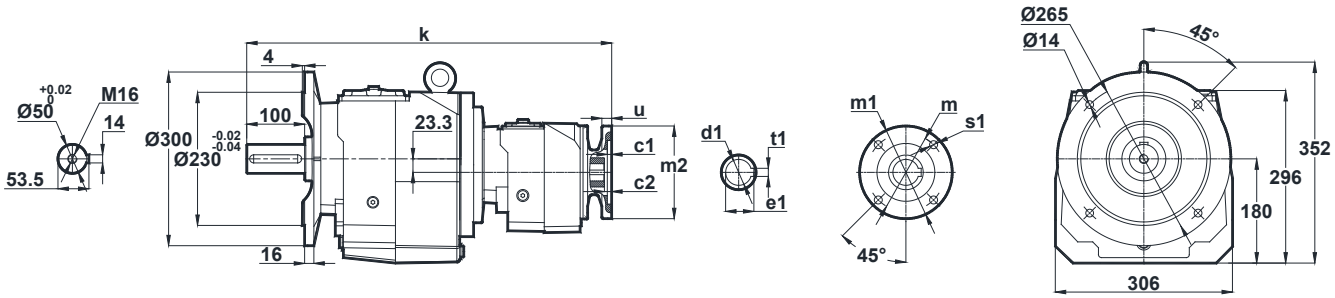

IEC	c1	c2	s1	m	m1	m2	i1	u	k	d1	t1	e1
63/B5	4	5	9	115	140	95	253.5	12	652.5	11	4	12.8
71/B5	4	8.5	11	130	160	110	224.5	12	623.5	14	5	16.3
71/B14	3	8.5	7	85	105	70	224.5	10	623.5	14	5	16.3

Optional Flange Dimensions

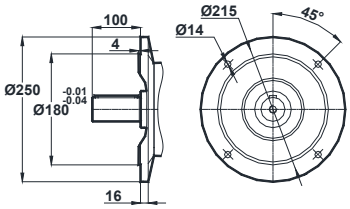

Opt. 1

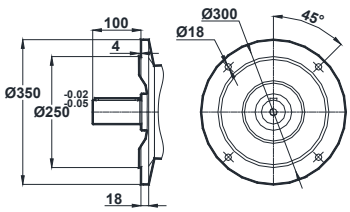

Opt. 2

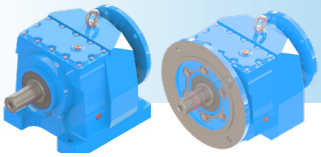

MN / NN - DIMENSION PAGES

Tapped center hole to DIN 332, sheet 2

MN572-A.. / B..
MN573-A.. / B..

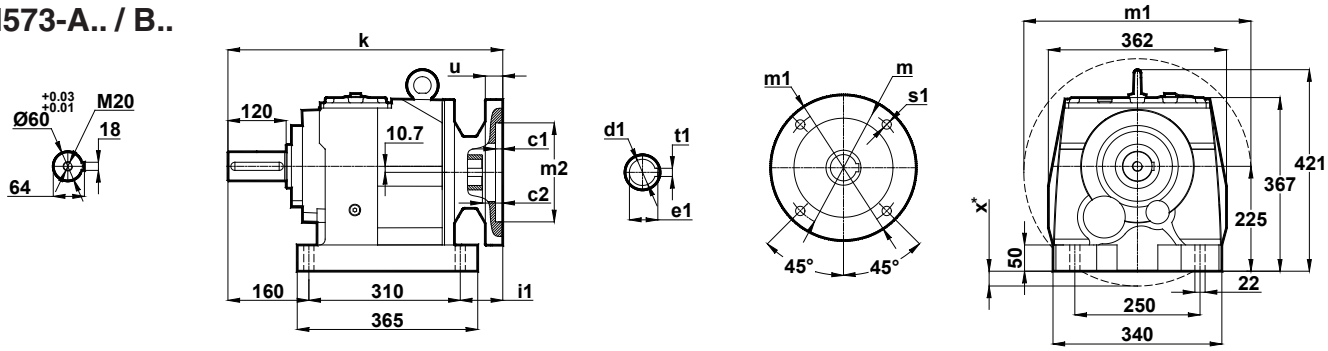

NN572-A.. / B..
NN573-A.. / B..

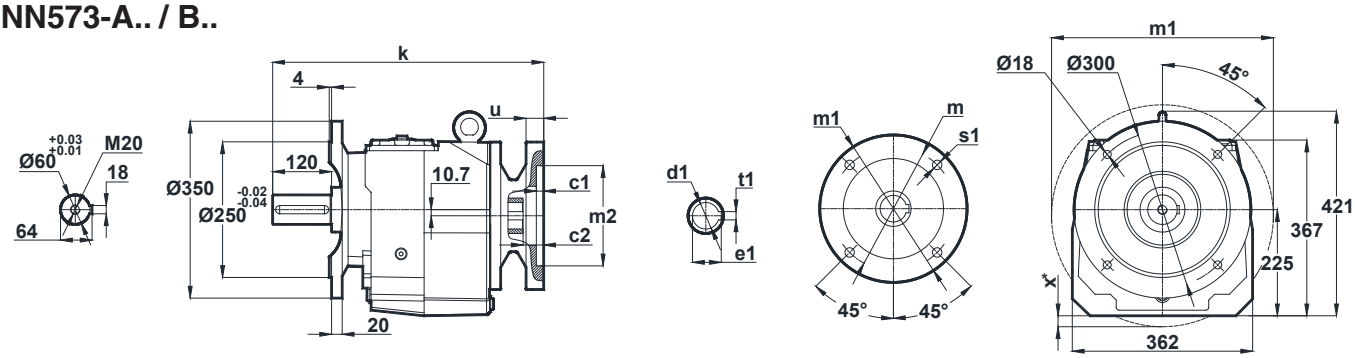

IEC	c1	c2	s1	m	m1	m2	i1	u	k	d1	t1	e1	x
100/B5	4.5	9	15	215	250	180	33.5	15	507.5	28	8	31.3	-
112/B5	4.5	9	15	215	250	180	33.5	15	507.5	28	8	31.3	-
132/B5	4.5	9	15	265	300	230	54.5	15	528.5	38	10	41.3	-
160/B5	5.5	10	19	300	350	250	130	18	604	42	12	45.3	-
180/B5	5.5	10	19	300	350	250	130	18	604	48	14	51.8	-
200/B5	5.5	10	19	350	400	300	150	22	624	55	16	59.3	-
132/B14	4.5	9	11	165	200	130	54.5	15	528.5	38	10	41.3	-

Optional Flange Dimensions

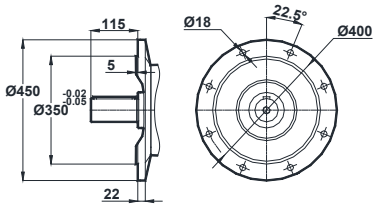

Opt. 1

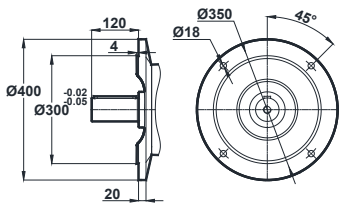

Opt. 2

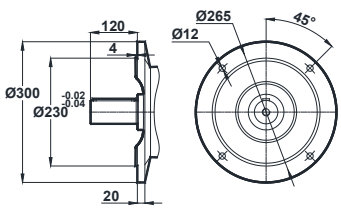

Opt. 3

x: If Motor is lower than foot mounting plane

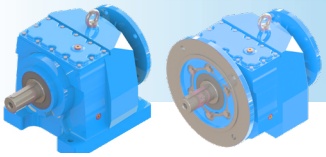

Tapped center hole to DIN 332, sheet 2

MN574-A..
MN574-B..

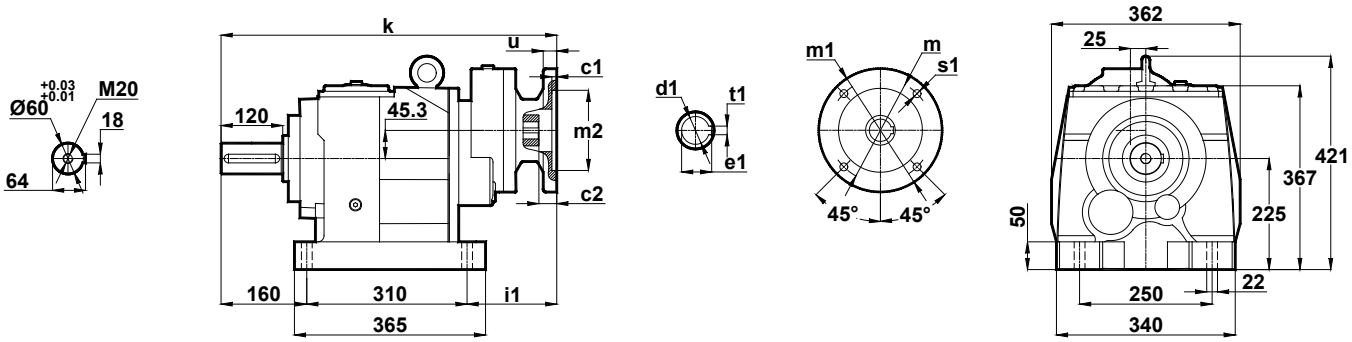

NN574-A..
NN574-B..

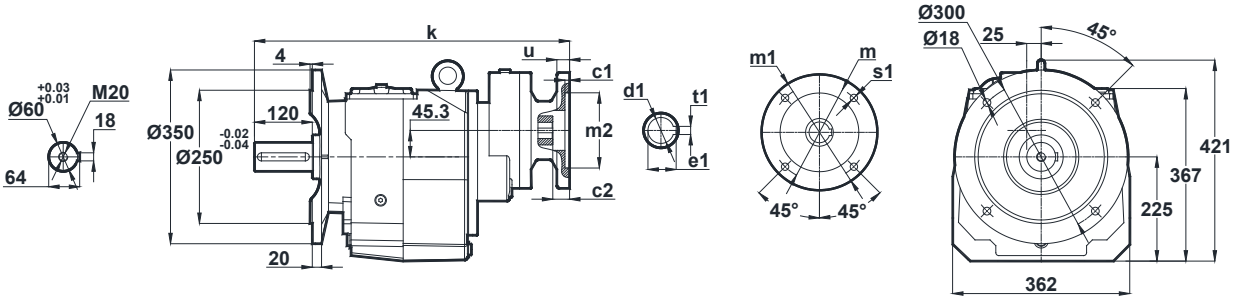

IEC	c1	c2	s1	m	m1	m2	i1	u	k	d1	t1	e1
71/B5	4	9	11	130	160	110	116.5	12	587.5	14	5	16.3
80/B5	4	9	12	165	200	130	116.5	12	587.5	14	6	21.8
90/B5	4	9	12	165	200	130	116.5	12	587.5	19	8	27.3
80/B14	4	9	7	100	120	80	116.5	12	587.5	19	6	21.8
90/B14	4	9	9	115	140	95	116.5	12	587.5	24	8	26.3

Optional Flange Dimensions

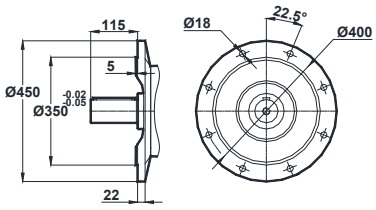

Opt. 1

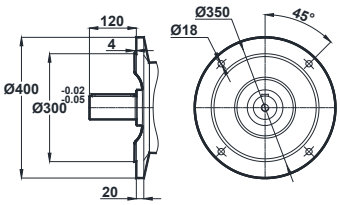

Opt. 2

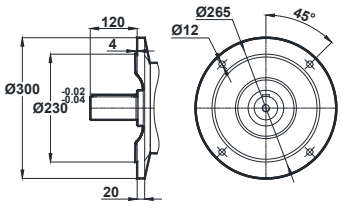

Opt. 3

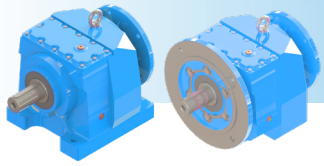

MN / NN - DIMENSION PAGES

Tapped center hole to DIN 332, sheet 2

MN575-A.. / B..
MN576-A.. / B..

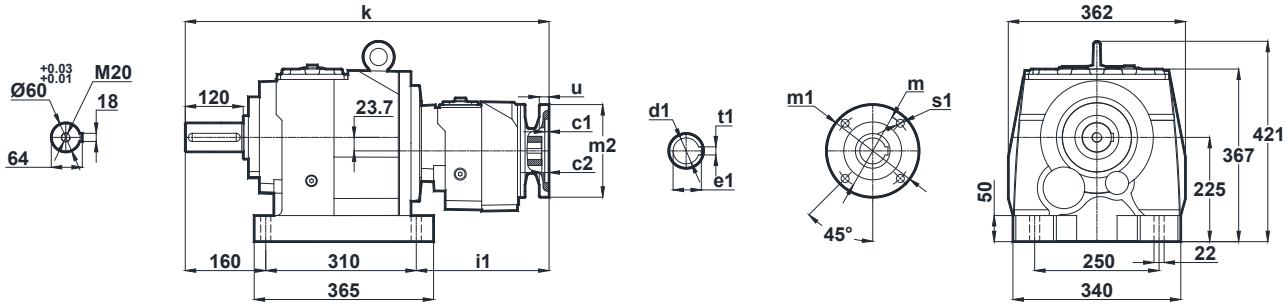

NN575-A.. / B..
NN576-A.. / B..

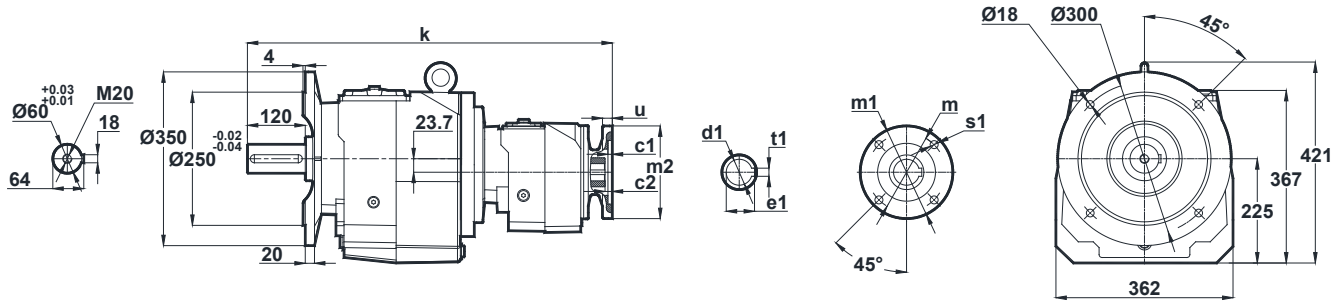

IEC	c1	c2	s1	m	m1	m2	i1	u	k	d1	t1	e1
63/B5	4	5	9	115	140	95	246.5	12	717.5	11	4	12.8
71/B5	4	8.5	11	130	160	110	217.5	12	688.5	14	5	16.3
71/B14	3	8.5	7	85	105	70	217.5	10	688.5	14	5	16.3

Optional Flange Dimensions

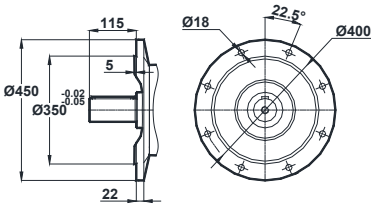

Opt. 1

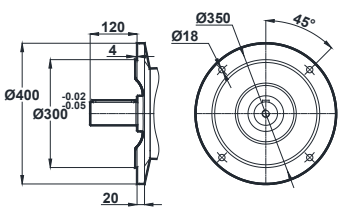

Opt. 2

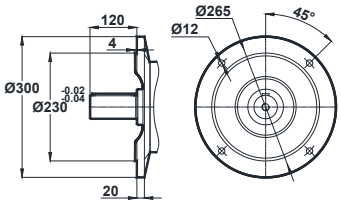

Opt. 3

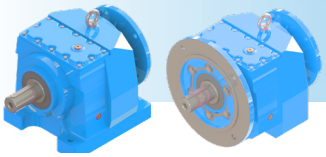

Tapped center hole to DIN 332, sheet 2

MN672-A.. / B..
MN673-A.. / B..

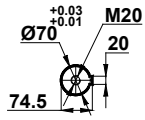

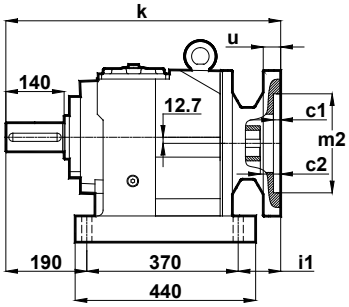

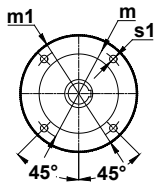

112 - 200 Type

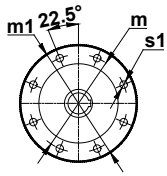

225 Type

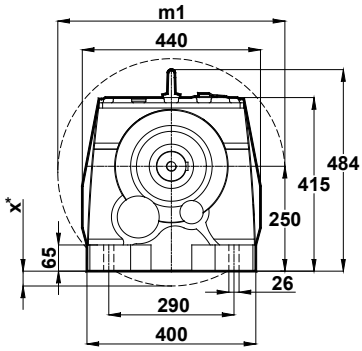

NN672-A.. / B..
NN673-A.. / B..

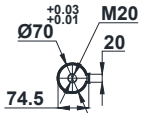

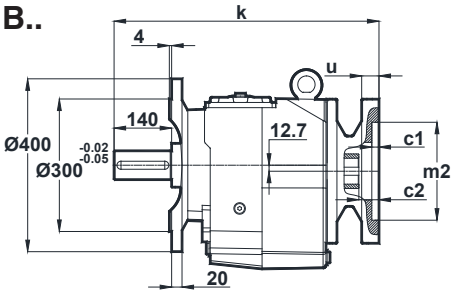

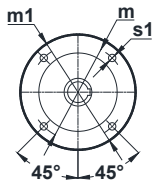

112 - 200 Type

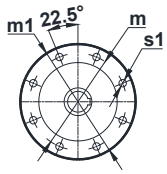

225 Type

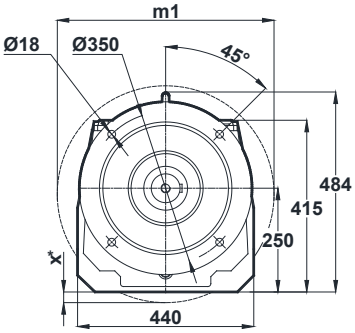

IEC	c1	c2	s1	m	m1	m2	i1	u	k	d1	t1	e1	x
112/B5	4.5	14.5	15	215	250	180	7.5	15	567.5	28	8	31.3	-
132/B5	4.5	9	15	265	300	230	22.5	15	582.5	38	10	41.3	-
160/B5	5.5	10	19	300	350	250	97.5	20	657.5	42	12	45.3	-
180/B5	5.5	10	19	300	350	250	97.5	20	657.5	48	14	51.8	-
200/B5	5.5	10	19	350	400	300	118	22	678	55	16	59.3	-
225/B5	5.5	10	19	400	450	350	171	24	731	60	18	64.4	-
132/B14	4.5	9	15	165	200	130	22.5	15	582.5	38	10	41.3	-

Optional Flange Dimensions

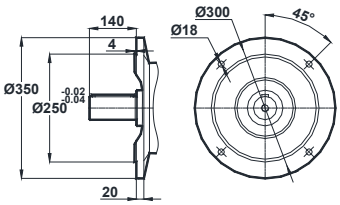

Opt. 1

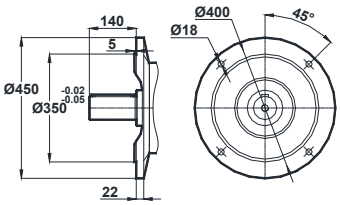

Opt. 2

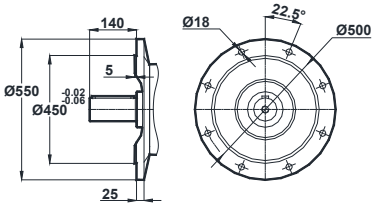

Opt. 3

x: If Motor is lower than foot mounting plane

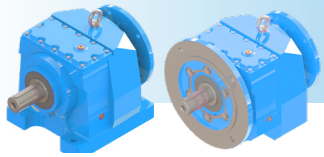

MN / NN - DIMENSION PAGES

Tapped center hole to DIN 332, sheet 2

MN674-A..
MN674-B..

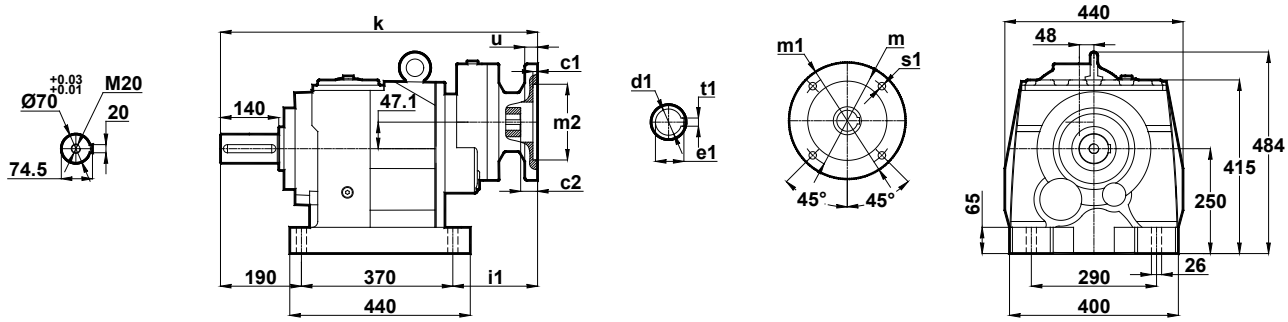

NN674-A..
NN674-B..

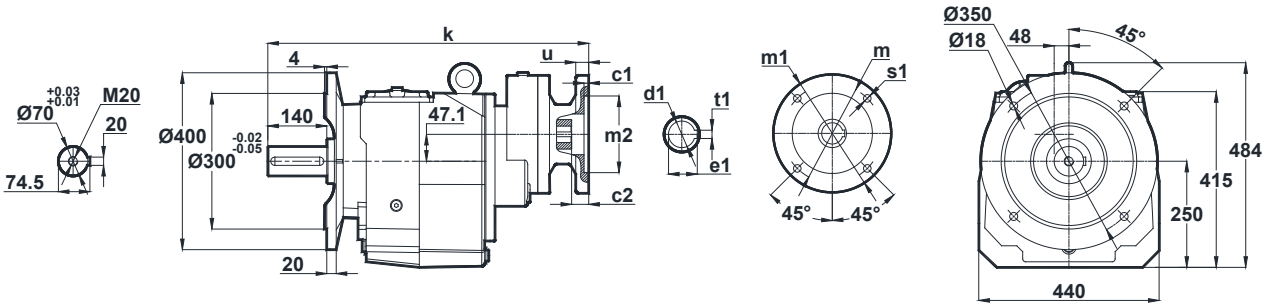

IEC	c1	c2	s1	m	m1	m2	i1	u	k	d1	t1	e1
80/B5	4	5	12	165	200	130	97.5	12	657.5	19	6	21.8
90/B5	4	5	12	165	200	130	97.5	12	657.5	24	8	27.3
90/B14	4	5	9	115	140	95	97.5	12	657.5	24	8	27.3

Optional Flange Dimensions

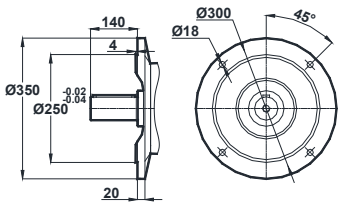

Opt. 1

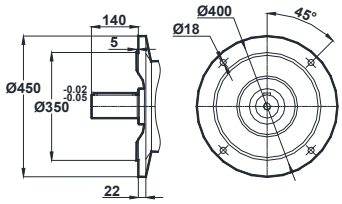

Opt. 2

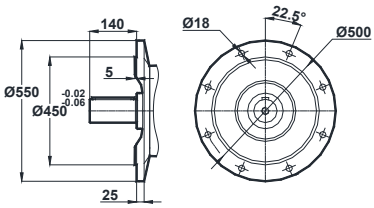

Opt. 3

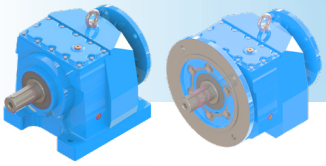

Tapped center hole to DIN 332, sheet 2

MN675-A.. / B..
MN676-A.. / B..

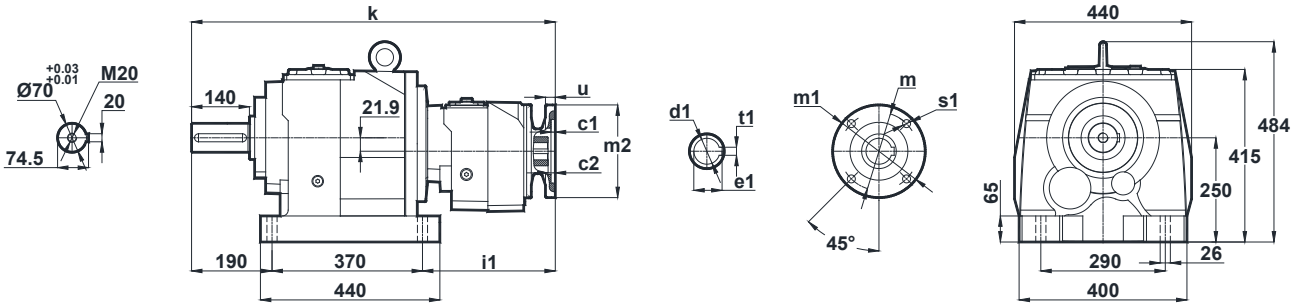

NN675-A.. / B..
NN676-A.. / B..

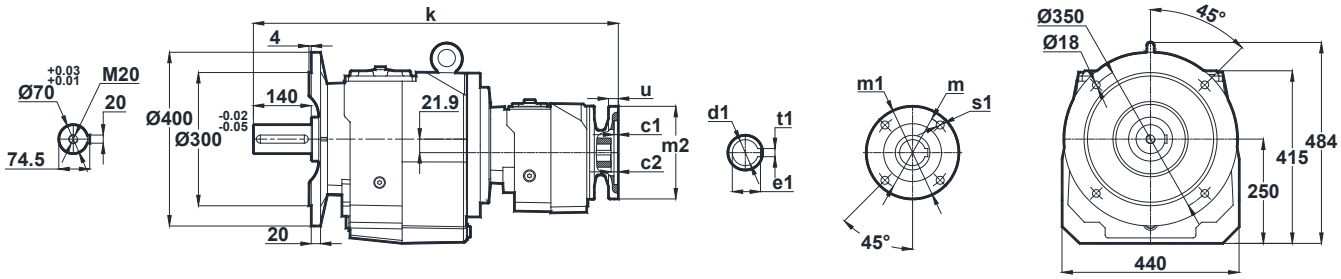

IEC	c1	c2	s1	m	m1	m2	i1	u	k	d1	t1	e1
71/B5	4	9	11	130	160	110	248	12	808	14	5	16.3
80/B5	4	9	12	165	200	130	248	12	808	19	6	21.8
80/B14	4	9	7	100	120	80	248	12	808	19	6	21.8

Optional Flange Dimensions

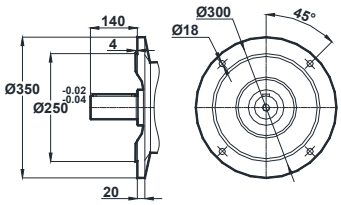

Opt. 1

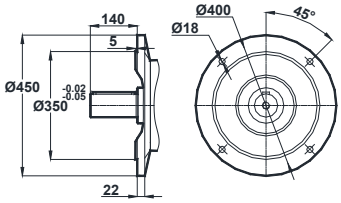

Opt. 2

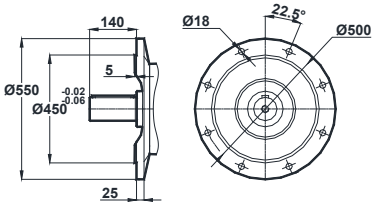

Opt. 3

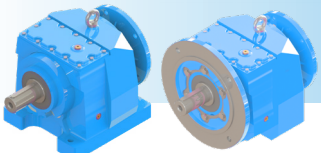

MN / NN - DIMENSION PAGES

Tapped center hole to DIN 332, sheet 2

MN772-A..
MN773-A..

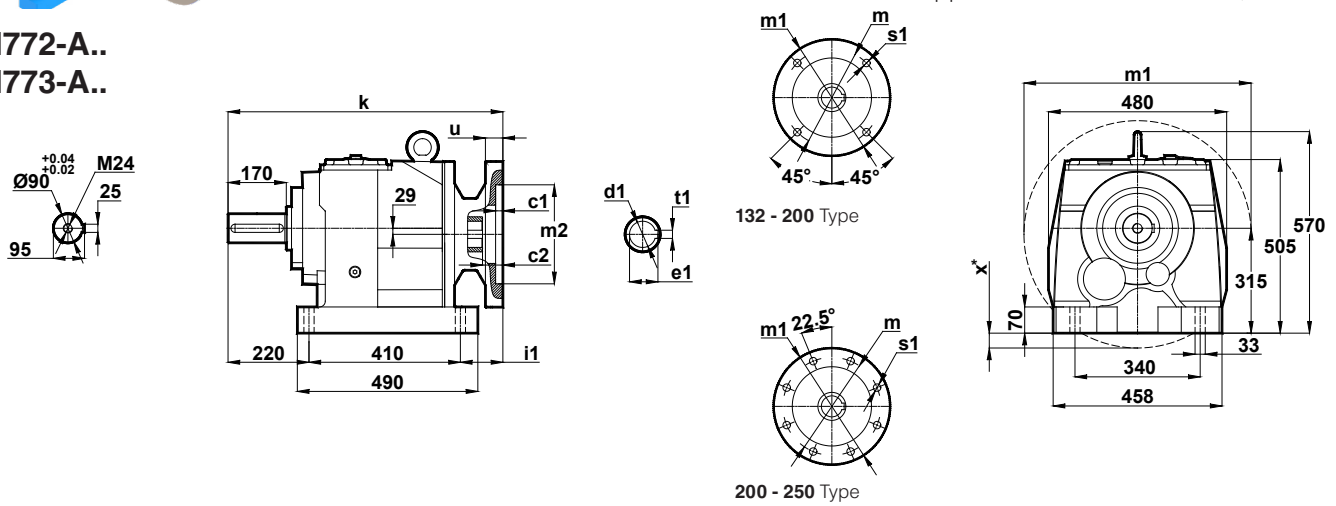

NN772-A..
NN773-A..

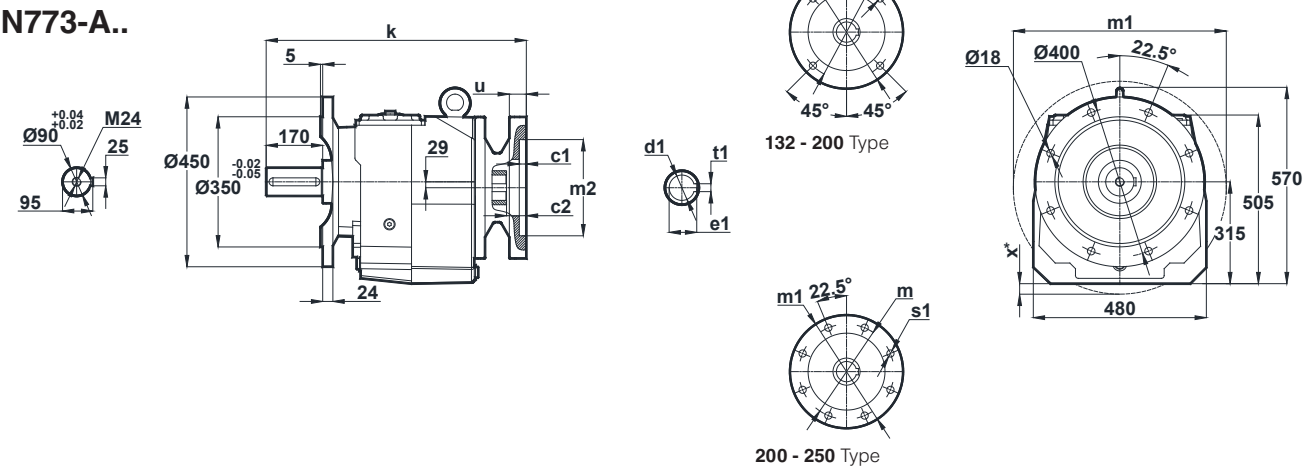

IEC	c1	c2	s1	m	m1	m2	i1	u	k	d1	t1	e1	x
132/B5	4.5	15	15	265	300	230	37.5	15	667.5	38	10	41.3	-
160/B5	5.5	10	19	300	350	250	107	20	737	42	12	45.3	-
180/B5	5.5	10	19	300	350	250	107	20	737	43	14	51.8	-
200/B5	5.5	10	19	350	400	300	129	20	759	55	16	59.3	-
225/B5	5.5	10	19	400	450	350	182	24	812	60	18	64.4	-
250/B5	5.5	10	19	500	550	450	182	24	812	65	18	69.4	-

Optional Flange Dimensions

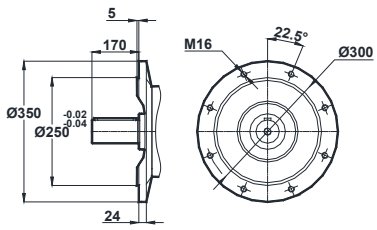

Opt. 1

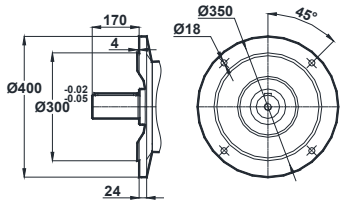

Opt. 2

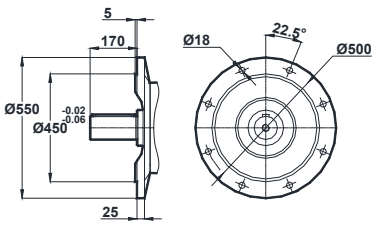

Opt. 3

x: If Motor is lower than foot mounting plane

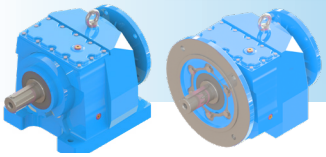

Tapped center hole to DIN 332, sheet 2

MN774-A..
MN774-B..

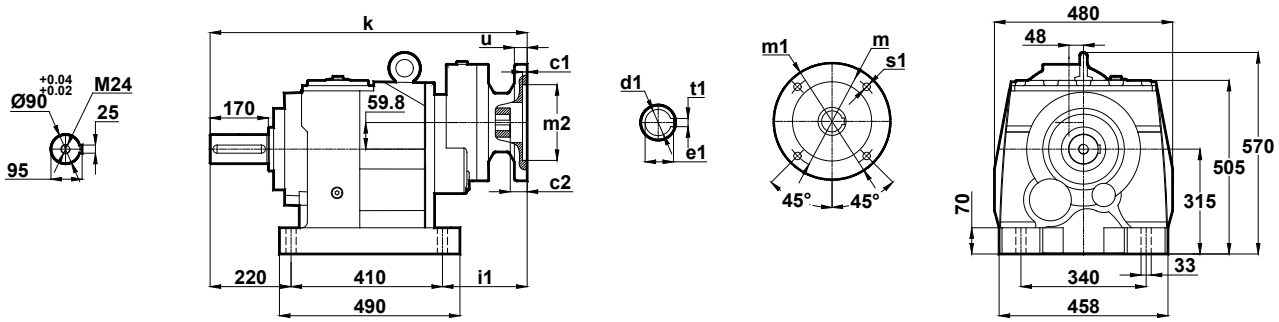

NN774-A..
NN774-B..

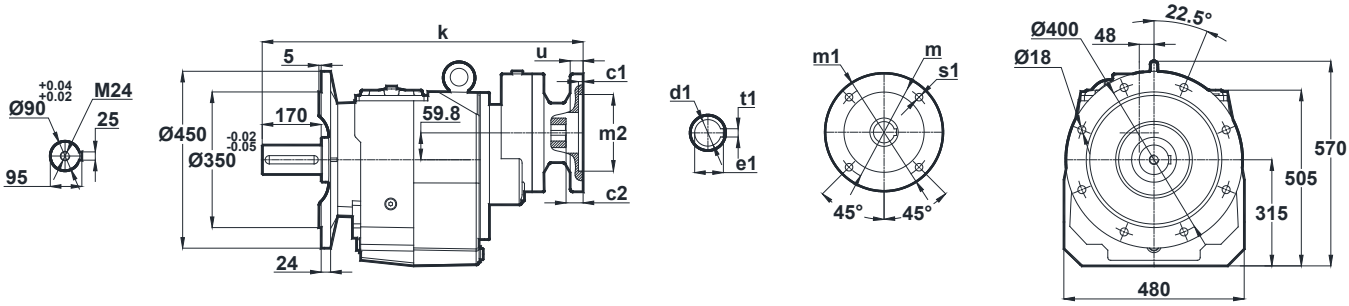

IEC	c1	c2	s1	m	m1	m2	i1	u	k	d1	t1	e1
80/B5	4	5	12	165	200	130	112.5	12	742.5	19	6	21.8
90/B5	4	5	12	165	200	130	112.5	12	742.5	24	8	27.3
100/B5	4.5	9	15	215	250	180	131	15	761	28	8	31.3
90/B14	4	5	9	115	140	95	112.5	12	742.5	24	8	27.3
100/B14	4	9	9	130	160	110	131	15	761	28	8	31.3

Optional Flange Dimensions

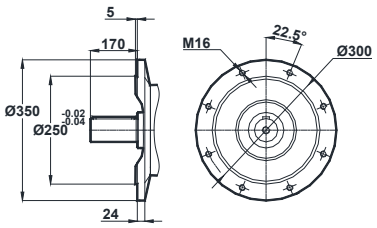

Opt. 1

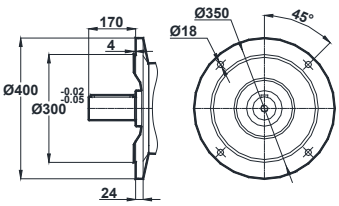

Opt. 2

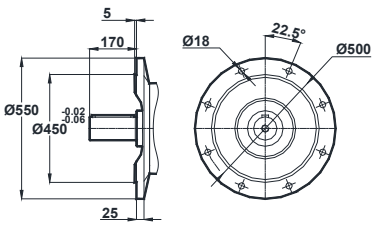

Opt. 3

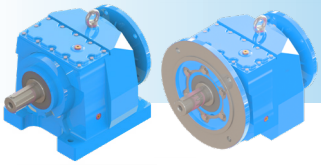

MN / NN - DIMENSION PAGES

Tapped center hole to DIN 332, sheet 2

MN775-A.. / B..
MN776-A.. / B..

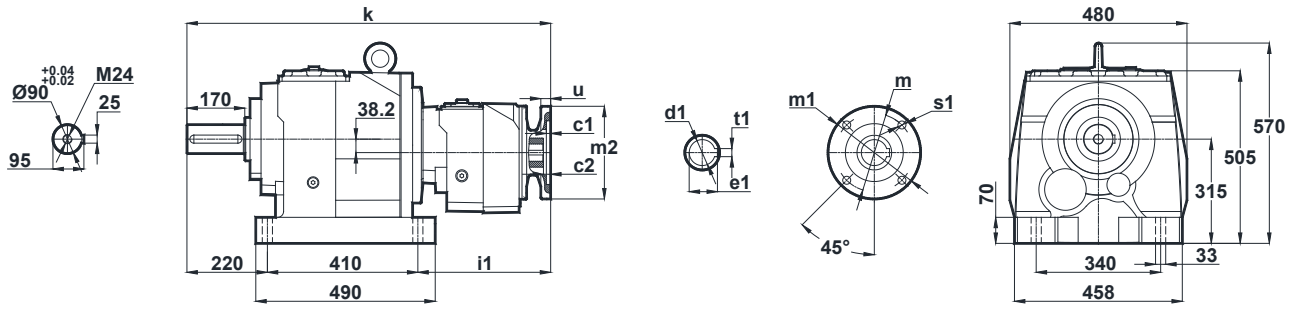

NN775-A.. / B..
NN776-A.. / B..

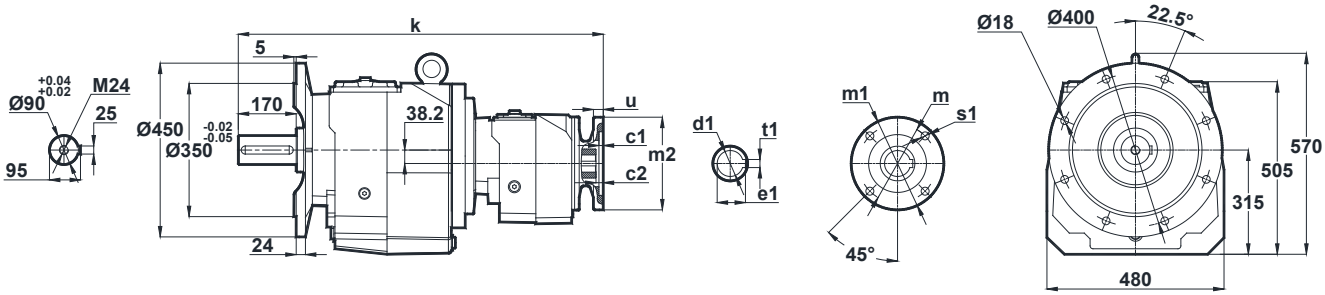

IEC	c1	c2	s1	m	m1	m2	i1	u	k	d1	t1	e1
71/B5	4	9	11	130	160	110	266	12	896	14	5	16.3
80/B5	4	9	12	165	200	130	266	12	869	19	6	21.8
90/B5	4	9	12	165	200	130	266	12	896	24	8	27.3
80/B14	4	9	7	100	120	80	266	12	896	19	6	21.8
90/B14	4	9	9	115	140	95	266	12	896	24	8	26.3

Optional Flange Dimensions

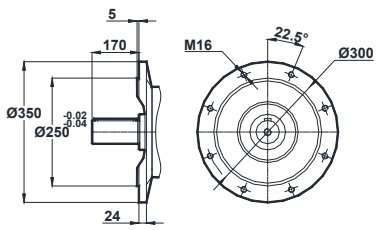

Opt. 1

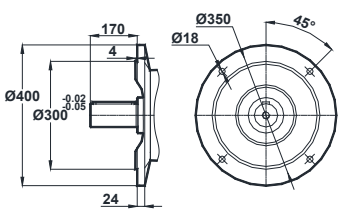

Opt. 2

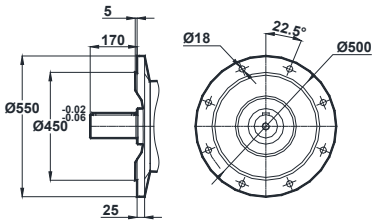

Opt. 3

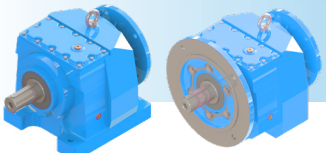

Tapped center hole to DIN 332, sheet 2

MN872-A..
MN873-A..

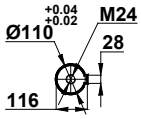

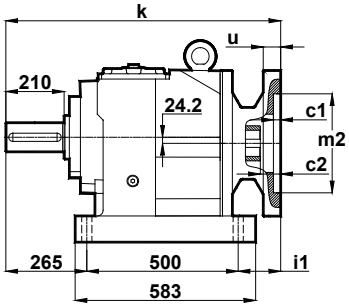

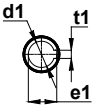

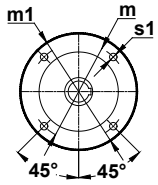

160 - 200 Type

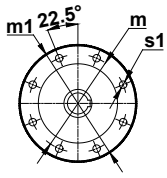

225 - 280 Type

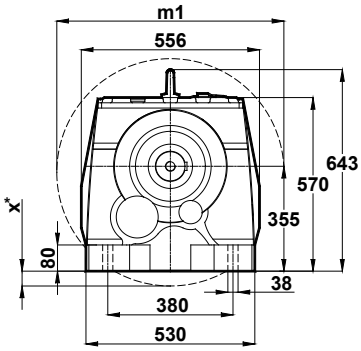

NN872-A..
NN873-A..

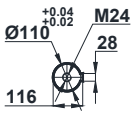

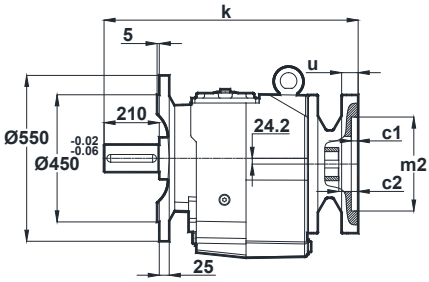

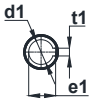

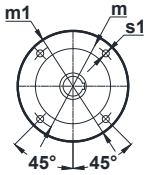

160 - 200 Type

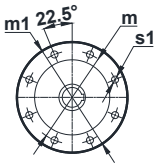

225 - 280 Type

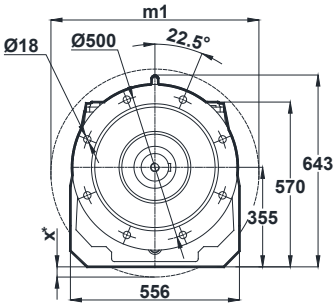

IEC	c1	c2	s1	m	m1	m2	i1	u	k	d1	t1	e1	x
160/B5	5.5	10	19	300	350	250	158	20	923	42	12	45.3	-
180/B5	5.5	10	19	300	350	250	158	20	923	48	14	51.8	-
200/B5	5.5	10	19	350	400	300	158	22	923	55	16	59.3	-
225/B5	5.5	10	19	400	450	350	158	24	923	60	18	64.4	-
250/B5	5.5	10	19	500	550	450	158	24	923	65	18	69.4	-
280/B5	5.5	10	19	500	550	450	158	24	923	75	20	79.9	-

Optional Flange Dimensions

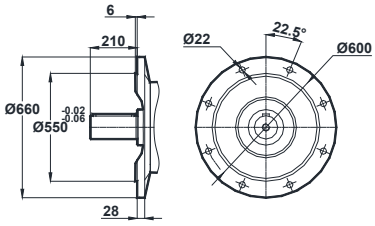

Opt. 1

x: If Motor is lower than foot mounting plane

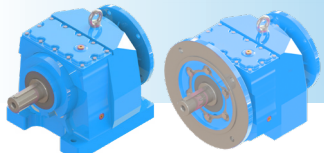

MN / NN - DIMENSION PAGES

Tapped center hole to DIN 332, sheet 2

MN874-A..
MN874-B..

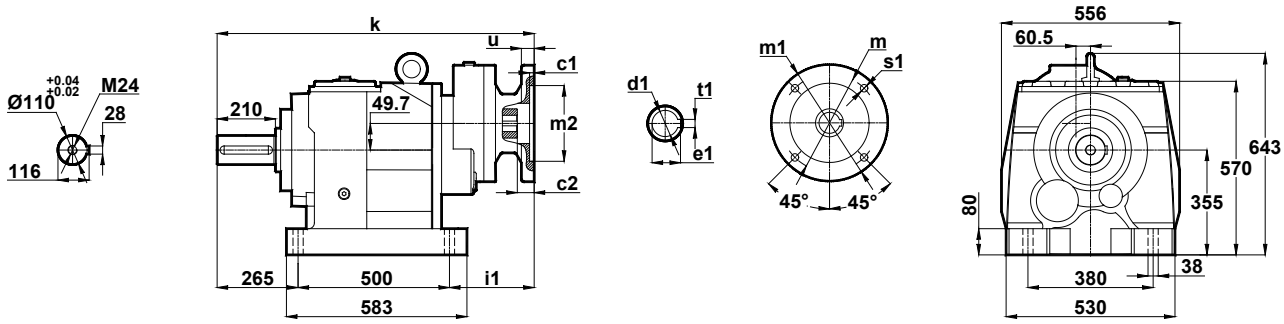

NN874-A..
NN874-B..

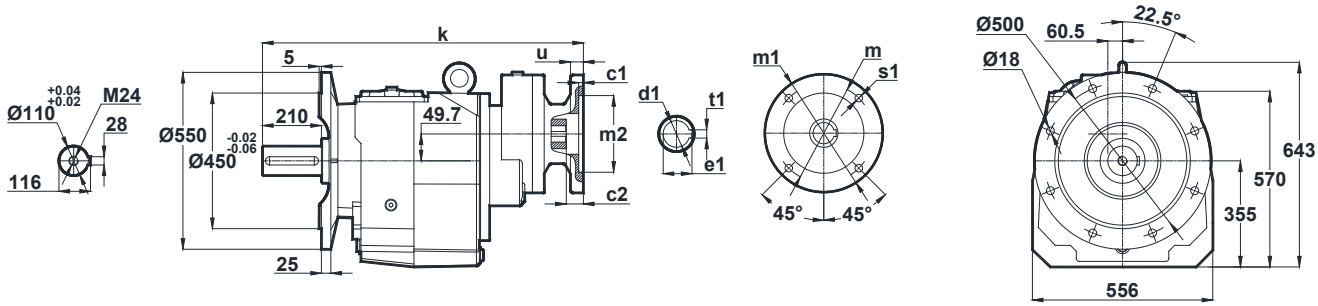

IEC	c1	c2	s1	m	m1	m2	i1	u	k	d1	t1	e1
100/B5	4.5	9	15	215	250	180	130.5	15	895.5	28	8	31.3
112/B5	4.5	9	15	215	250	180	130.5	15	895.5	28	8	31.3
132/B5	4.5	9	15	265	300	230	151.5	15	916.5	38	10	41.3
132/B14	4.5	9	11	165	200	130	151.5	15	916.5	38	10	41.3

Optional Flange Dimensions

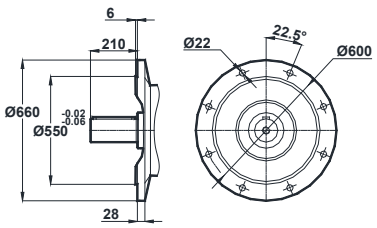

Opt. 1

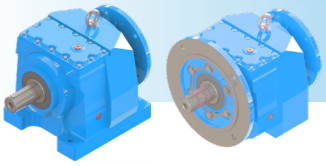

Tapped center hole to DIN 332, sheet 2

MN875-A.. / B..
MN876-A.. / B..

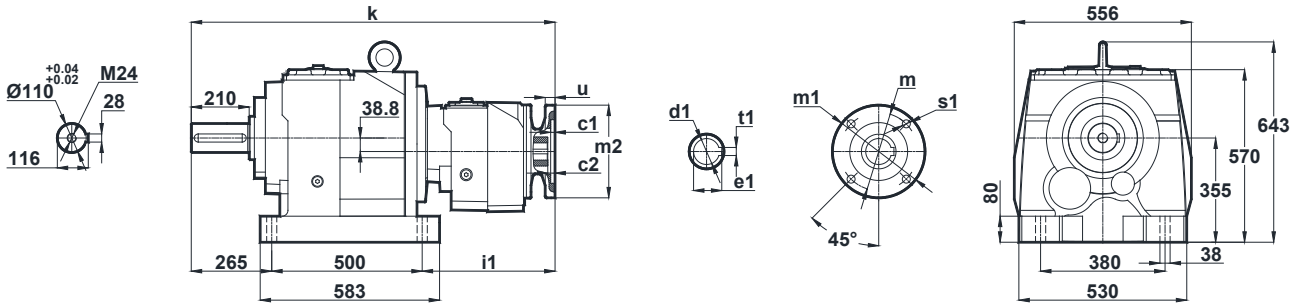

NN875-A.. / B..
NN876-A.. / B..

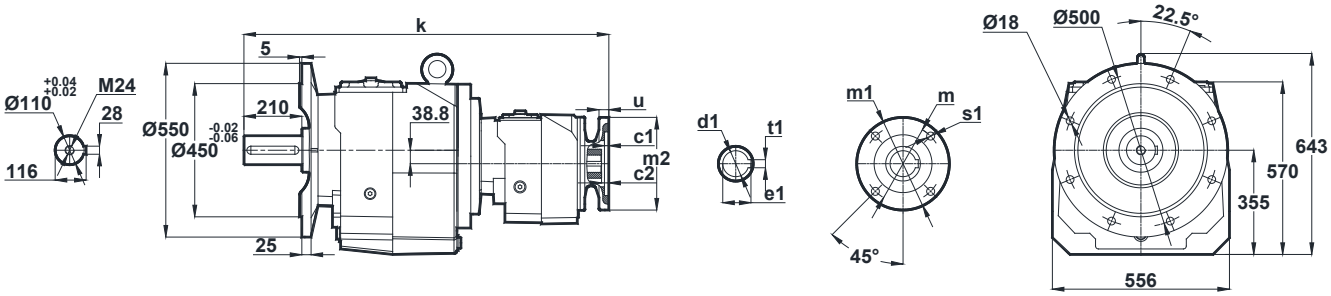

IEC	c1	c2	s1	m	m1	m2	i1	u	k	d1	t1	e1
71/B5	4	9	11	130	160	110	248	12	1013	14	5	16.3
80/B5	4	9	12	165	200	130	248	12	1013	19	6	21.8
90/B5	4	9	12	165	200	130	248	12	1013	24	8	27.3
100/B5	4.5	9	15	215	250	180	265	15	1030	28	8	31.3
80/B14	4	9	7	100	120	80	248	12	1013	19	8	21.8
90/B14	4	9	9	115	140	95	248	12	1013	24	8	26.3
100/B14	4	9	9	130	160	110	265	15	1030	28	8	31.3

Optional Flange Dimensions

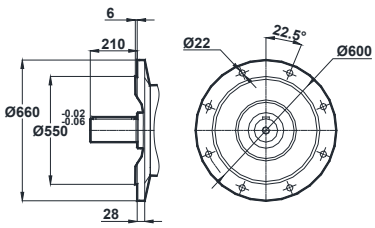

Opt. 1

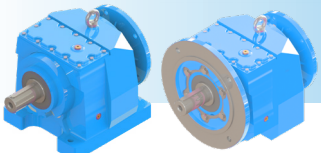

MN / NN - DIMENSION PAGES

Tapped center hole to DIN 332, sheet 2

MN972-A..
MN973-A..

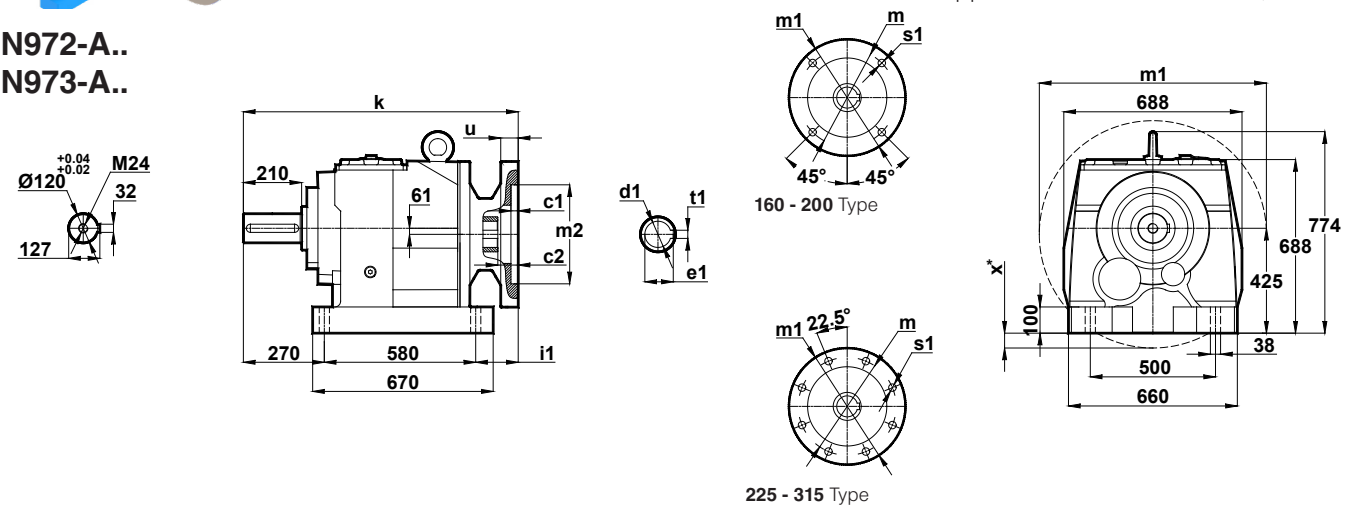

NN972-A..
NN973-A..

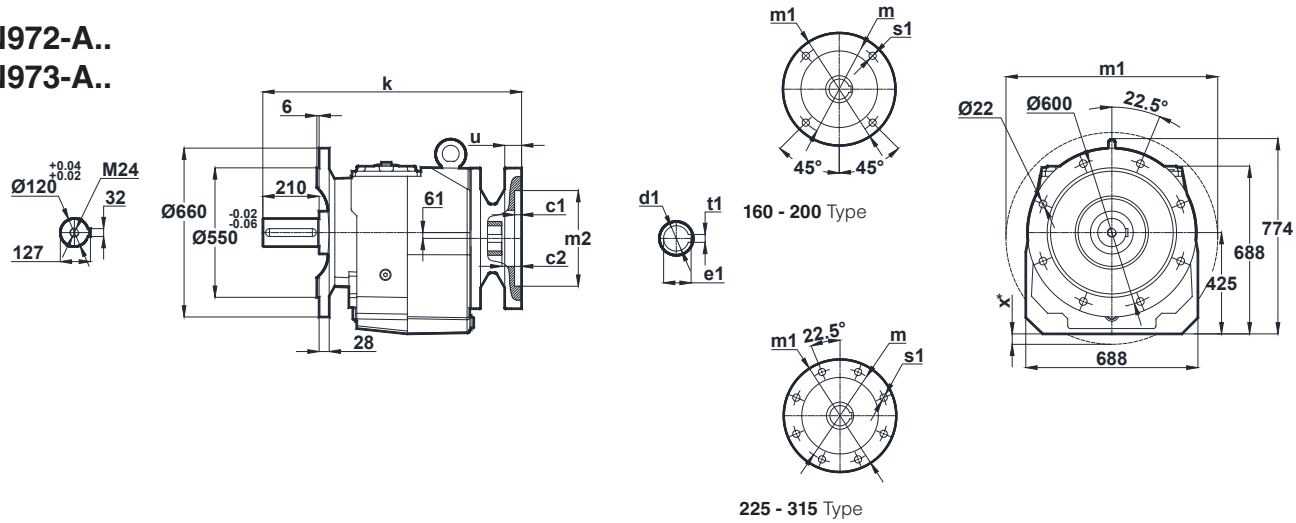

IEC	c1	c2	s1	m	m1	m2	i1	u	k	d1	t1	e1	x
160/B5	5.5	10	19	300	350	250	60.5	20	910.5	42	12	45.3	-
180/B5	5.5	10	19	300	350	250	60.5	20	910.5	48	14	51.8	-
200/B5	5.5	10	19	350	400	300	84.5	22	934.5	55	16	59.3	-
225/B5	5.5	10	19	400	450	350	126.5	24	976.5	60	18	64.4	-
250/B5	5.5	10	19	500	550	450	178.5	24	998.5	65	18	69.4	-
280/B5	5.5	10	19	500	550	450	178.5	24	998.5	75	20	79.9	-
315/B5	6.5	15	24	660	600	550	228.5	24	1078.5	85	22	90.4	-

x: If Motor is lower than foot mounting plane

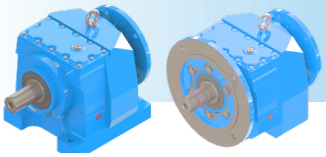

Tapped center hole to DIN 332, sheet 2

MN974-A..
MN974-B..

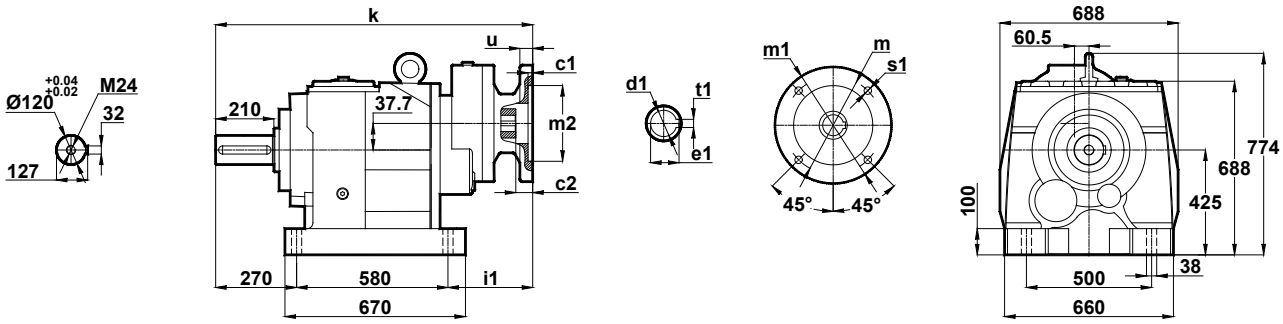

NN974-A..
NN974-B..

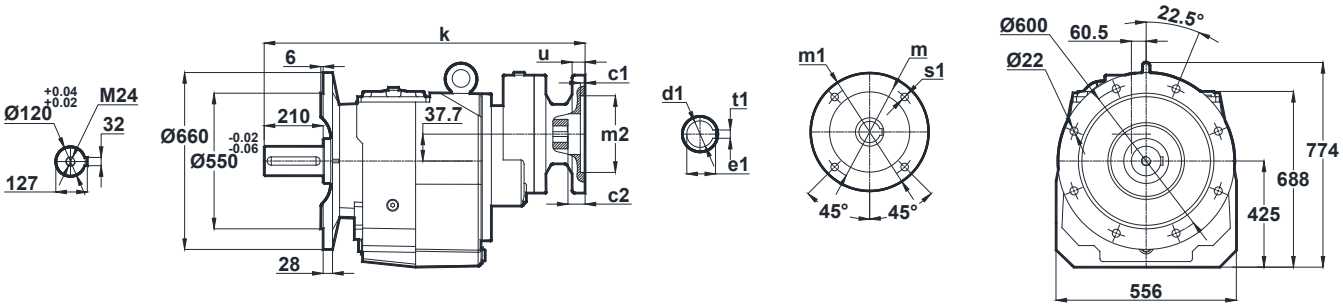

IEC	c1	c2	s1	m	m1	m2	i1	u	k	d1	t1	e1
100/B5	4.5	14.5	15	215	250	180	149	15	999	28	8	31.3
112/B5	4.5	14.5	15	215	250	180	149	15	999	28	8	31.3
132/B5	4.5	9	15	265	300	230	164	15	1014	38	10	41.3
132/B14	4.5	9	15	165	200	130	164	15	1014	38	10	41.3

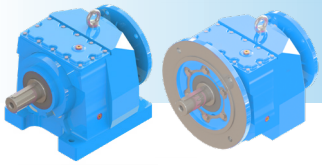

MN / NN - DIMENSION PAGES

Tapped center hole to DIN 332, sheet 2

MN975-A.. / B..
MN976-A.. / B..

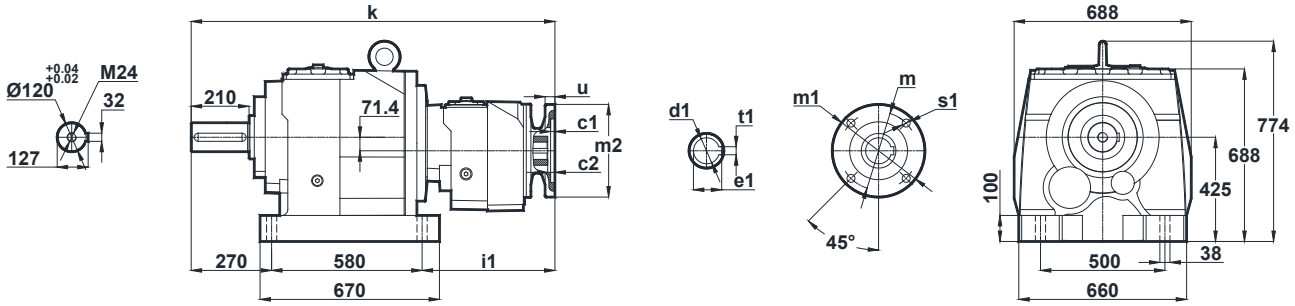

NN975-A.. / B..
NN976-A.. / B..

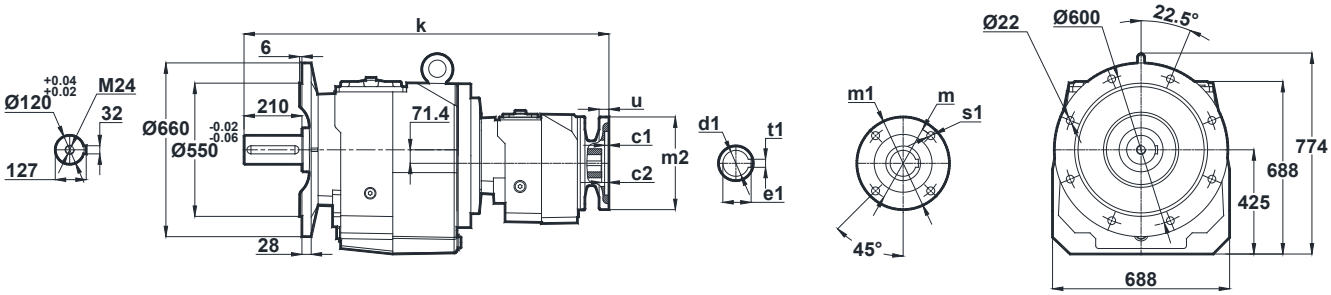

IEC	c1	c2	s1	m	m1	m2	i1	u	k	d1	t1	e1
80/B5	4	5	12	165	200	130	285	12	1135	19	6	12.8
90/B5	4	5	12	165	200	130	285	12	1135	24	8	27.3
100/B5	4.5	9	15	215	250	180	303.5	15	1153.5	28	8	31.3
112/B5	4.5	9	15	215	250	180	303.5	15	1153.5	28	8	31.3
132/B5	4.5	6	15	265	300	230	322	15	1172	38	10	41.3
90/B14	4	5	9	115	140	95	285	12	1135	24	8	27.3
100/B14	4	9	9	130	160	110	303.5	15	1153.5	28	8	31.3
112/B14	4	9	9	130	160	110	303.5	15	1153.5	28	8	31.3
132/B14	4.5	6	11	165	200	130	322	15	1172	38	10	41.3

DANA BREVINI®
Motion Systems

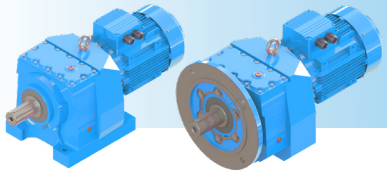

MV / NV - DIMENSION PAGES

Tapped center hole to DIN 332, sheet 2

MV002
MV003

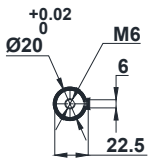

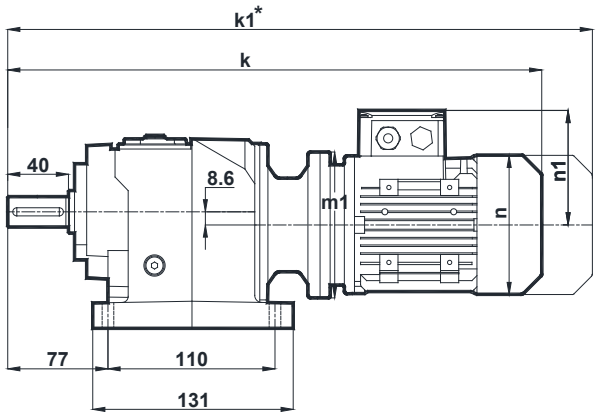

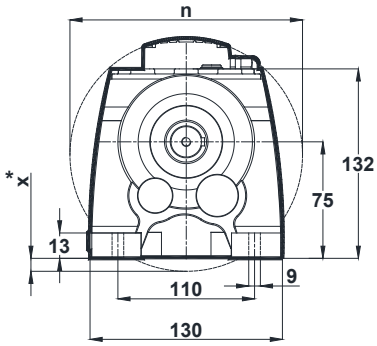

NV002
NV003

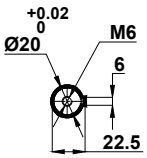

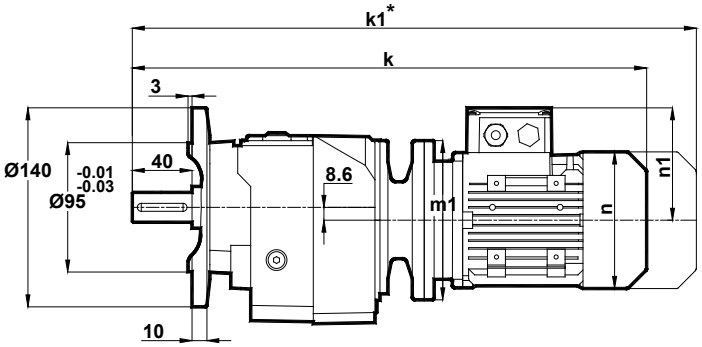

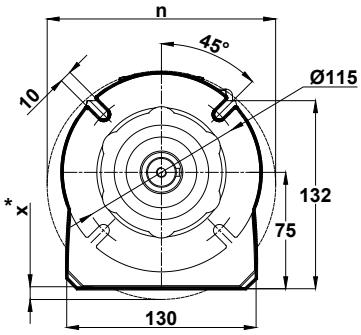

Motor Size					
IEC	63/B5 63/B14	71/B5 71/B14	80/B5 80/B14	90S/B5 90S/B14	90L/B5 90L/B14
k	407	426.5	464.5	505.5	505.5
k1	468	517.5	557.5	609	609
n / n1	121 / 97	137 / 112	155 / 121	176 / 132	176 / 132
m1 (B5)	140	160	200	200	200
m1 (B14)	90	105	120	140	140
x (B5)	4	14	34	34	34

Terminal Box

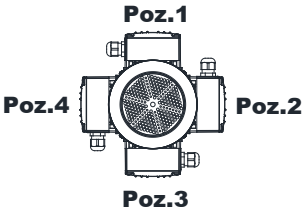

63-71-80-90

Optional Flange Dimensions

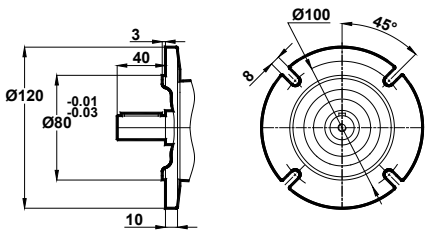

Opt. 1

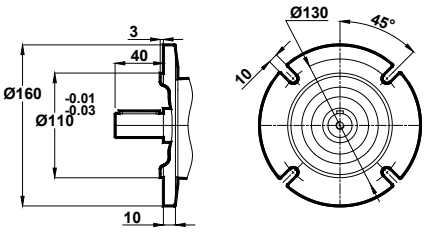

Opt. 2

* Dimension " k1" is for motors with brake.
x: If Motor is lower than foot mounting plane

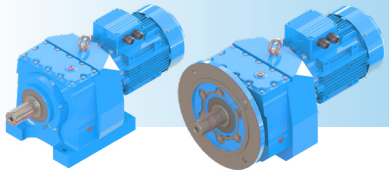

Tapped center hole to DIN 332, sheet 2

MV102
MV103

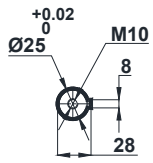

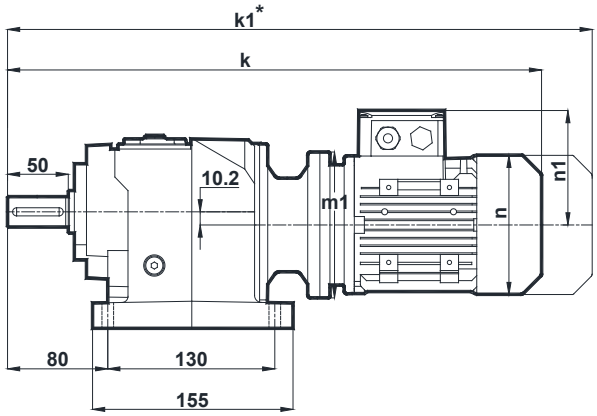

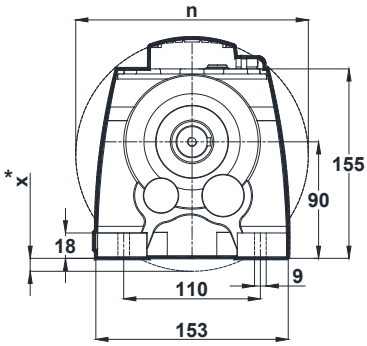

NV102
NV103

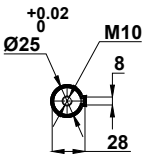

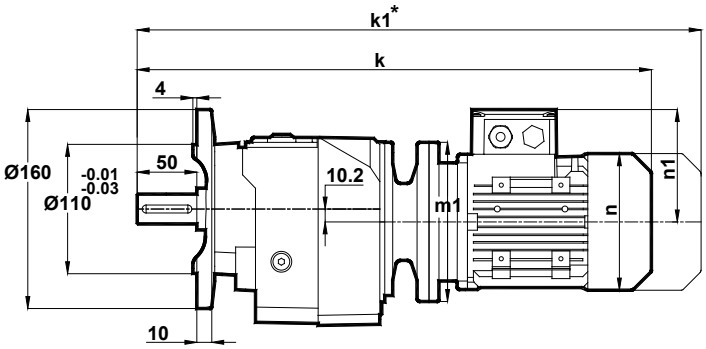

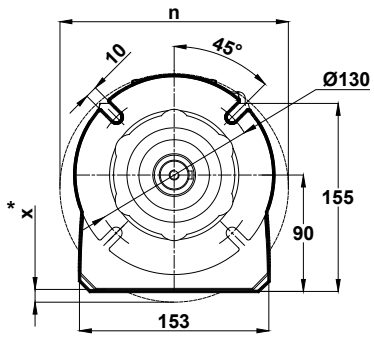

Motor Size					
IEC	63/B5 63/B14	71/B5 71/B14	80/B5 80/B14	90S/B5 90S/B14	90L/B5 90L/B14
k	431	450.5	488.5	529.5	529.5
k1	492	541.5	581.5	633	633
n / n1	121 / 97	137 / 112	155 / 121	176 / 132	176 / 132
m1 (B5)	140	160	200	200	200
m1 (B14)	90	105	120	140	140
x (B5)	-	1	21	21	21

Terminal Box

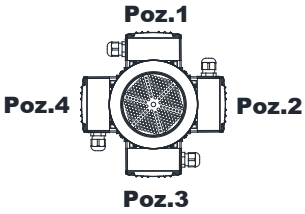

63-71-80-90

Optional Flange Dimensions

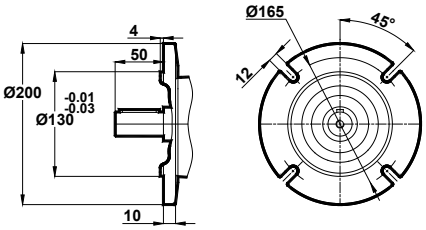

Opt. 1

* Dimension " k1" is for motors with brake.
x: If Motor is lower than foot mounting plane

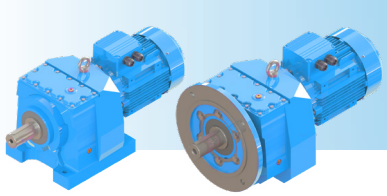

MV / NV - DIMENSION PAGES

Tapped center hole to DIN 332, sheet 2

MV172
MV173

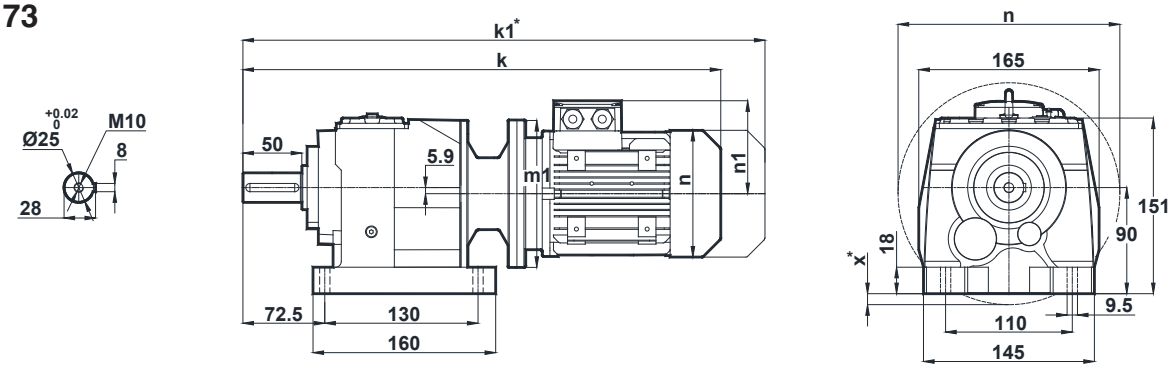

NV172
NV173

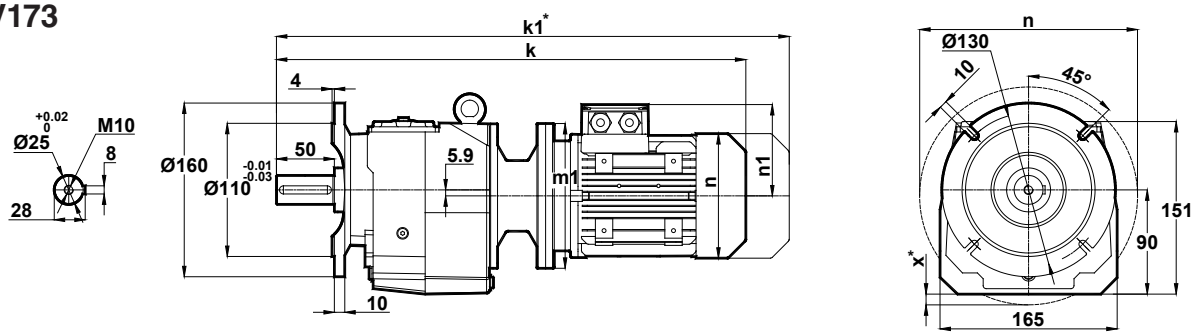

Motor Size							
IEC	63/B5 63/B14	71/B5 71/B14	80/B5 80/B14	90S/B5 90S/B14	90L/B5 90L/B14	100L/B5 100L/B14	112M/B5 112M/B14
k	434	453.5	491.5	532.5	532.5	579	599.5
k1	495	544.5	584.5	636	636	687.5	704
n / n1	121 / 97	137 / 112	155 / 121	176 / 132	176 / 132	193 / 147	215 / 158
m1 (B5)	140	160	200	200	200	250	250
m1 (B14)	-	105	120	140	140	160	160
x (B5)	-	-	16	16	16	41	41

Terminal Box

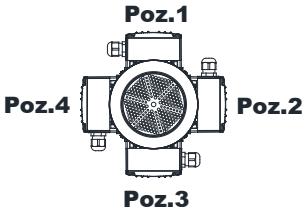

63-71-80-90-100-112

Optional Flange Dimensions

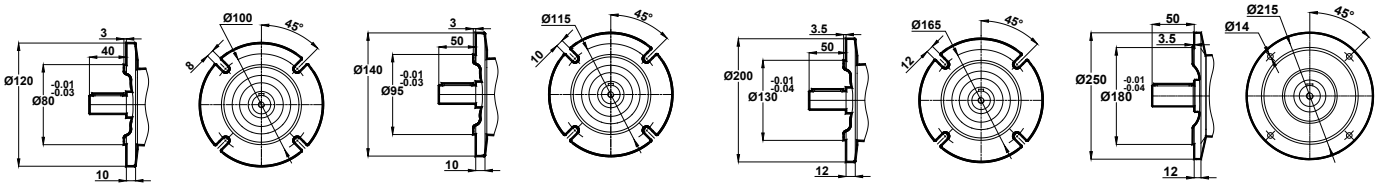

Opt. 1 **Opt. 2** **Opt. 3** **Opt. 4**

* Dimension " k1" is for motors with brake.
x: If Motor is lower than foot mounting plane

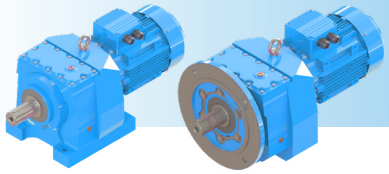

Tapped center hole to DIN 332, sheet 2

MV202
MV203

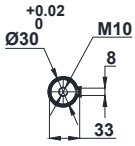

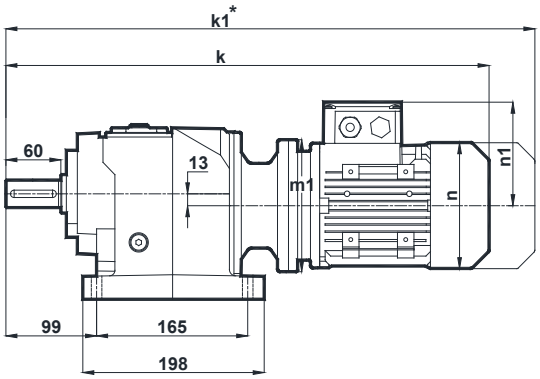

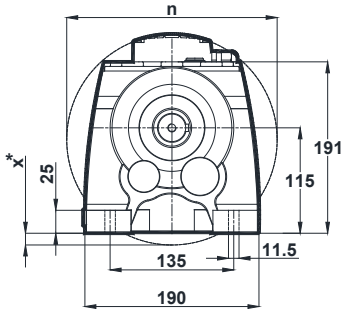

NV202
NV203

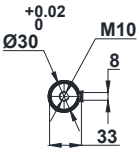

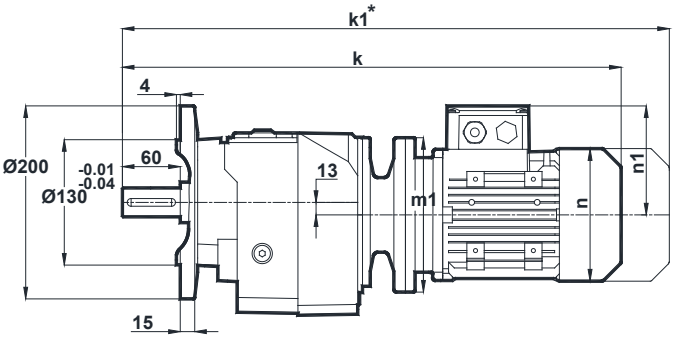

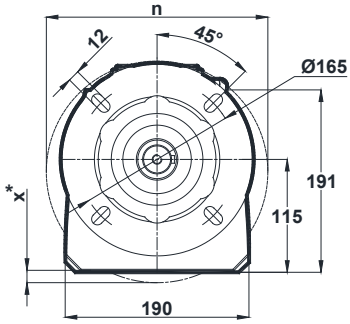

Motor Size							
IEC	63/B5	71/B5 71/B14	80/B5 80/B14	90S/B5 90S/B14	90L/B5 90L/B14	100L/B5 100L/B14	112M/B5 112M/B14
k	515.5	504.5	556.5	597.5	597.5	626	646.5
k1	576.5	595.5	649.5	701	701	734.5	751
n / n1	121 / 97	137 / 112	155 / 121	176 / 132	176 / 132	193 / 147	215 / 158
m1 (B5)	140	160	200	200	200	250	250
m1 (B14)	-	105	120	140	140	160	160
x (B5)	-	-	-	-	-	23	23

Terminal Box

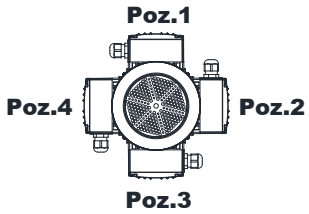

63-71-80-90-100-112

Optional Flange Dimensions

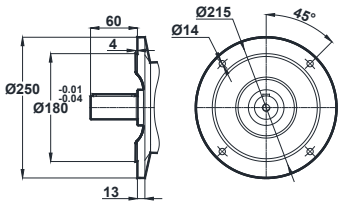

Opt. 1

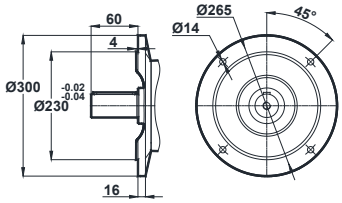

Opt. 2

* Dimension " k1" is for motors with brake.
x: If Motor is lower than foot mounting plane

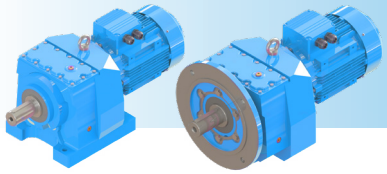

MV / NV - DIMENSION PAGES

Tapped center hole to DIN 332, sheet 2

MV272
MV273

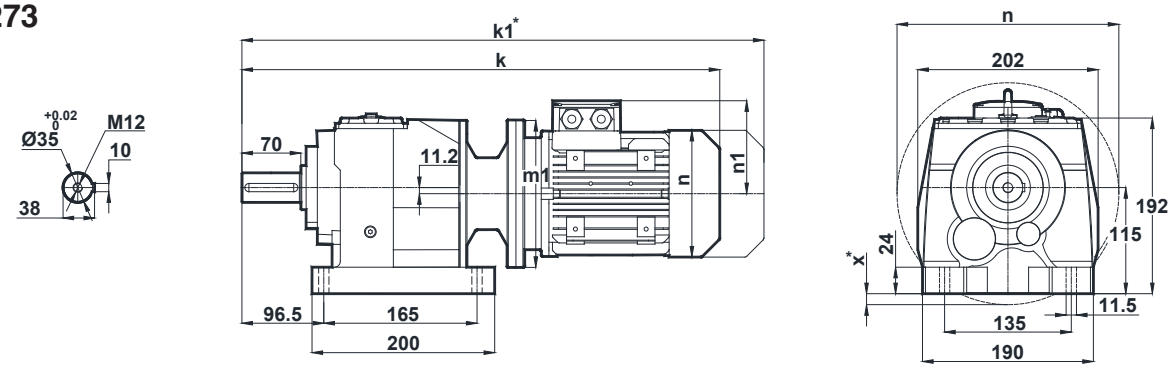

NV272
NV273

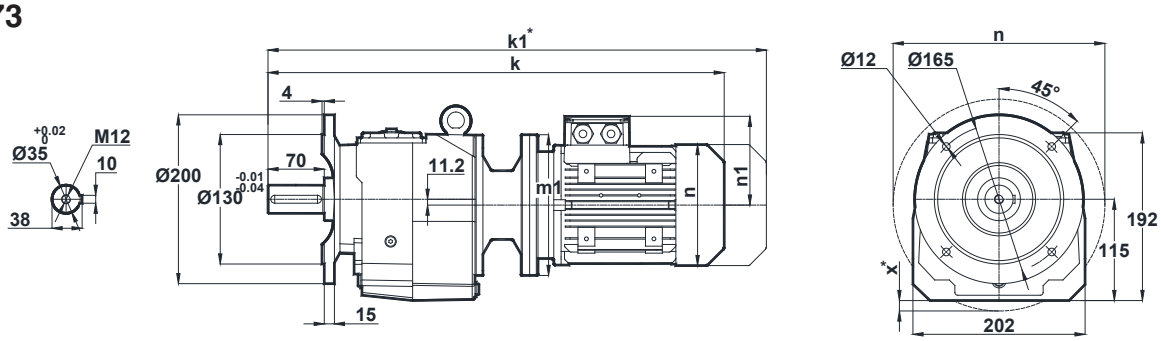

Motor Size									
IEC	63/B5	71/B5 71/B14	80/B5 80/B14	90S/B5 90S/B14	90L/B5 90L/B14	100L/B5 100L/B14	112M/B5 112M/B14	132S/B5 132S/B14	132M/B5 132M/B14
k	516.5	505.5	557.5	598.5	598.5	627	647.5	778.5	778.5
k1	577.5	596.5	650.5	702	702	735.5	752	908.5	908.5
n / n1	121 / 97	137 / 112	155 / 121	176 / 132	176 / 132	193 / 147	215 / 158	257 / 179	257 / 179
m1 (B5)	140	160	200	200	200	250	250	300	300
m1 (B14)	-	105	120	140	140	160	160	200	200
x (B5)	-	-	-	-	-	22	22	47	47

Terminal Box

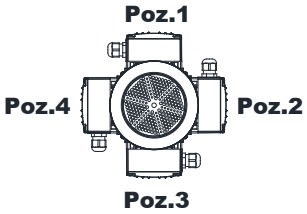

63-71-80-90-100-112-132

Optional Flange Dimensions

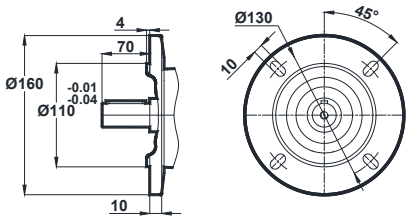

Opt. 1

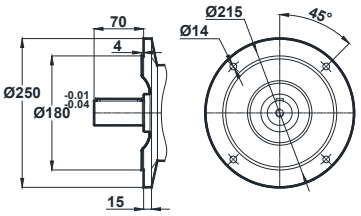

Opt. 2

* Dimension " k1" is for motors with brake.
x: If Motor is lower than foot mounting plane

Tapped center hole to DIN 332, sheet 2

MV275
MV276

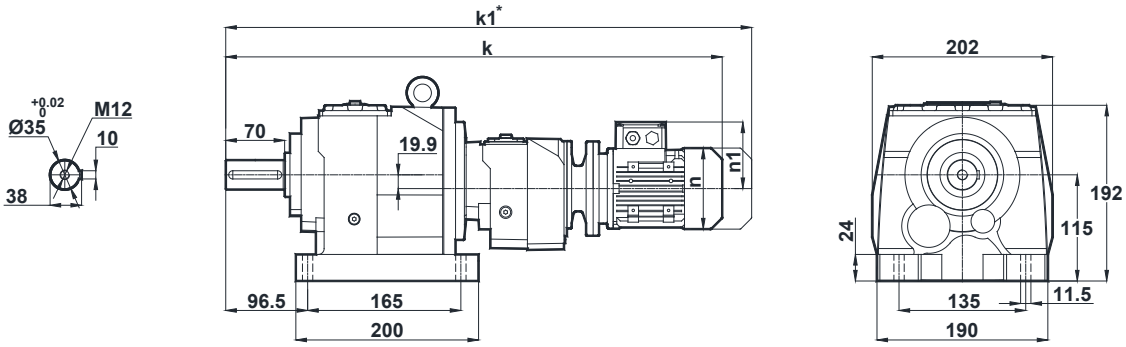

NV275
NV276

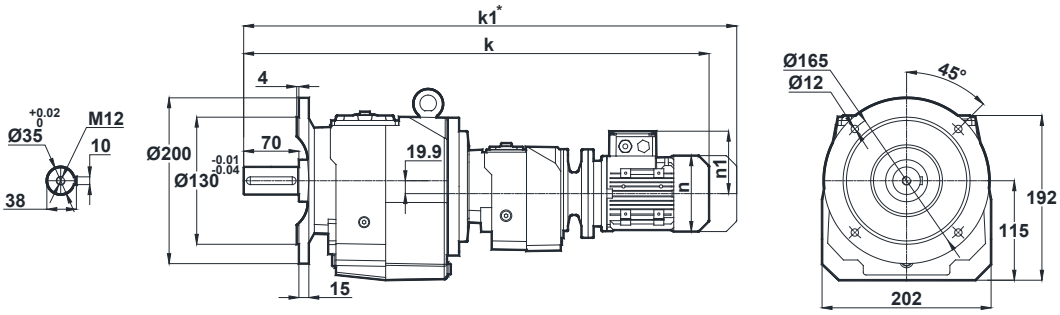

Motor Size		
IEC	63/B5 63/B14	71/B5 71/B14
k	632	651.5
k1	693	742.5
n / n1	121 / 97	137 / 112
m1 (B5)	140	160
m1 (B14)	90	105

Terminal Box

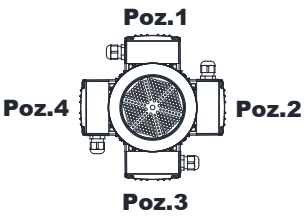

63-71

Optional Flange Dimensions

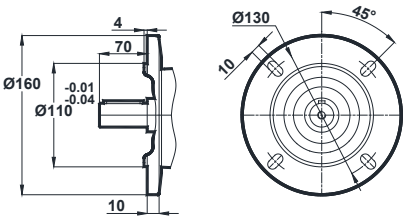

Opt. 1

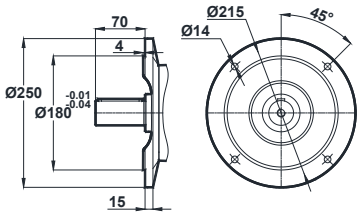

Opt. 2

* Dimension " k1" is for motors with brake.

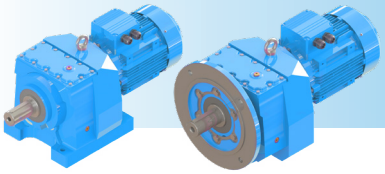

MV / NV - DIMENSION PAGES

Tapped center hole to DIN 332, sheet 2

MV282
MV283

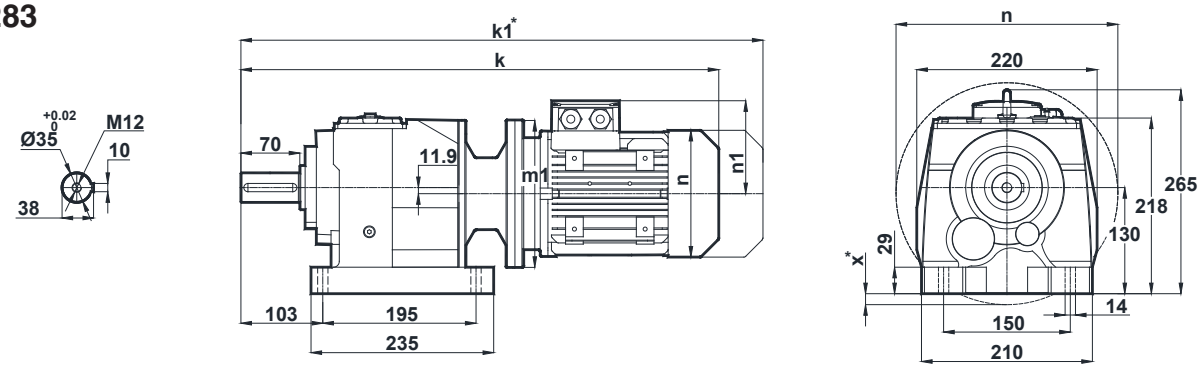

NV282
NV283

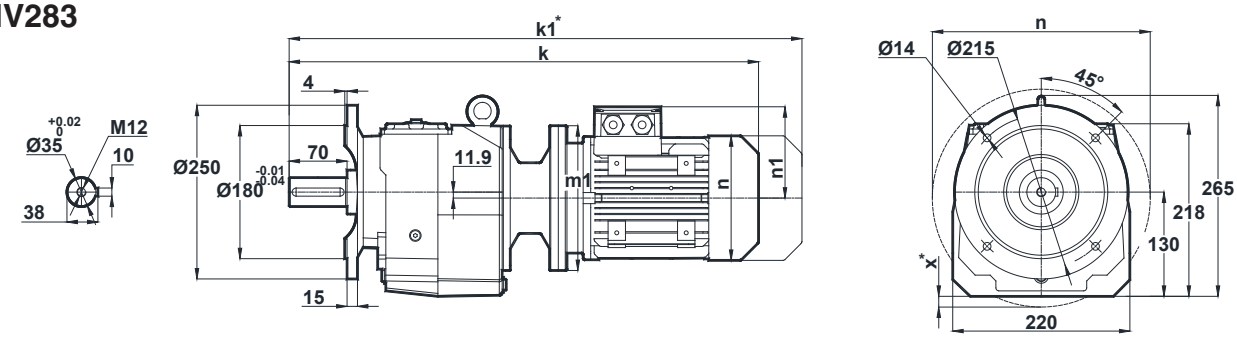

Motor Size								
IEC	71/B5	80/B5 80/B14	90S/B5 90S/B14	90L/B5 90L/B14	100L/B5 100L/B14	112M/B5 112M/B14	132S/B5 132S/B14	132M/B5 132M/B14
k	554	577	618	618	670.5	691	795	795
k1	645	670	721.5	721.5	779	795.5	925	925
n / n1	137 / 112	155 / 121	176 / 132	176 / 132	193 / 147	215 / 158	257 / 179	257 / 179
m1 (B5)	160	200	200	200	250	250	300	300
m1 (B14)	-	120	140	140	160	160	200	200
x (B5)	-	-	-	-	7	7	32	32

Terminal Box

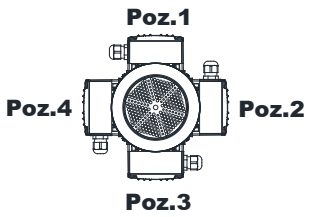

71-80-90-100-112-132

Optional Flange Dimensions

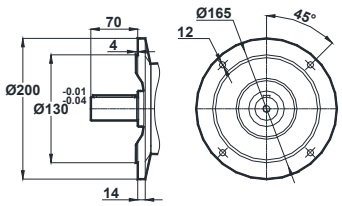

Opt. 1

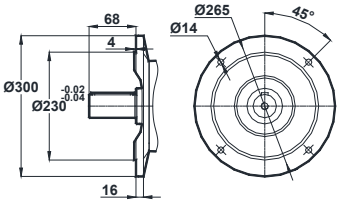

Opt. 2

* Dimension " k1" is for motors with brake.
x: If Motor is lower than foot mounting plane

Tapped center hole to DIN 332, sheet 2

MV284

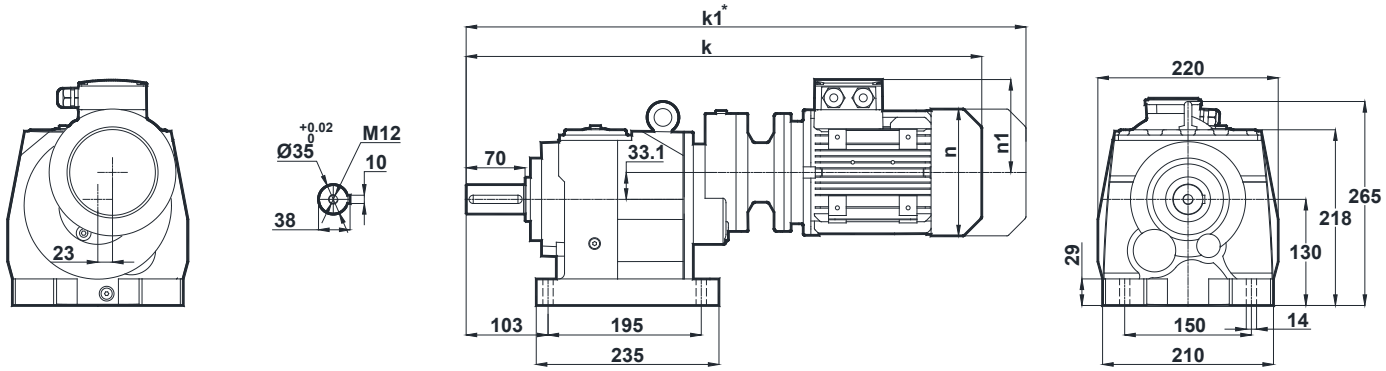

NV284

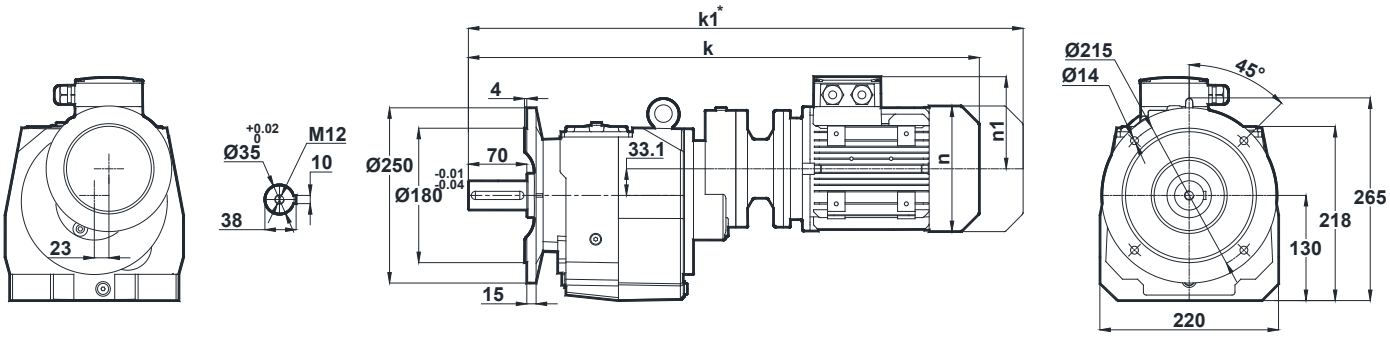

Motor Size		
IEC	63/B5	71/B5 71/B14
k	613	602
k1	674	693
n / n1	121 / 97	137 / 112
m1 (B5)	140	160
m1 (B14)	-	105

Terminal Box

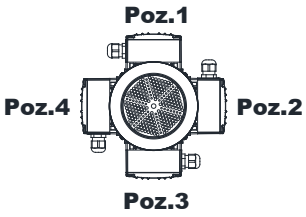

63-71

Optional Flange Dimensions

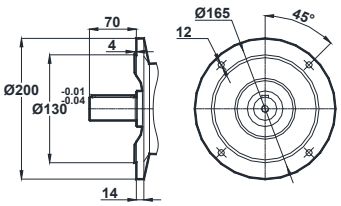

Opt. 1

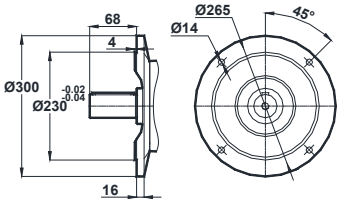

Opt. 2

* Dimension " k1" is for motors with brake.

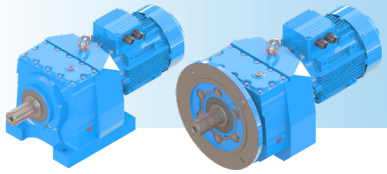

MV / NV - DIMENSION PAGES

Tapped center hole to DIN 332, sheet 2

MV285
MV286

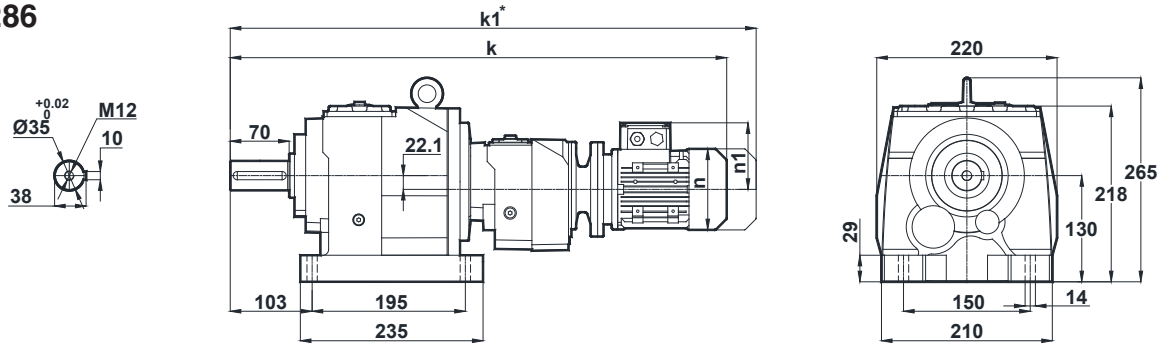

NV285
NV286

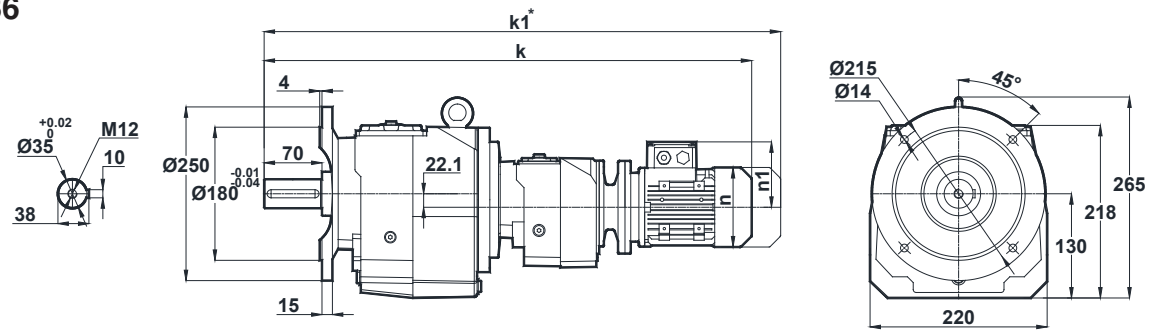

Motor Size	
IEC	63/B5 63/B14
k	681
k1	742
n / n1	121 / 97
m1 (B5)	140
m1 (B14)	90

Terminal Box

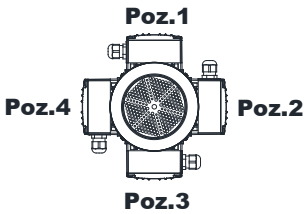

63

Optional Flange Dimensions

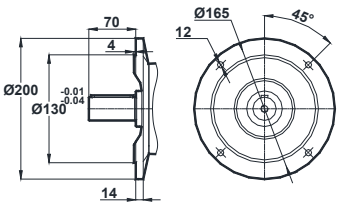

Opt. 1

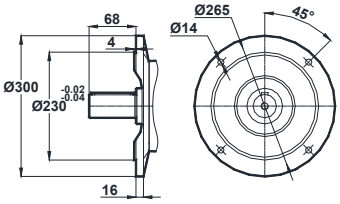

Opt. 2

* Dimension " k1" is for motors with brake.

Tapped center hole to DIN 332, sheet 2

MV372
MV373

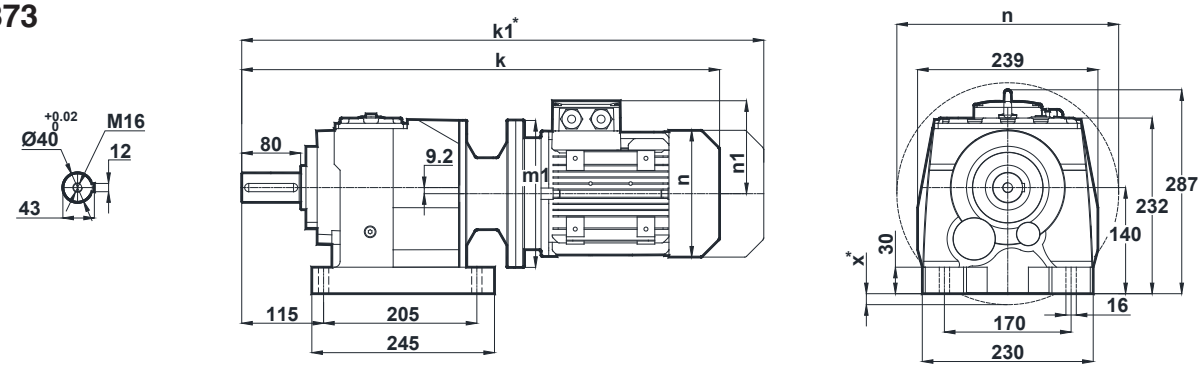

NV372
NV373

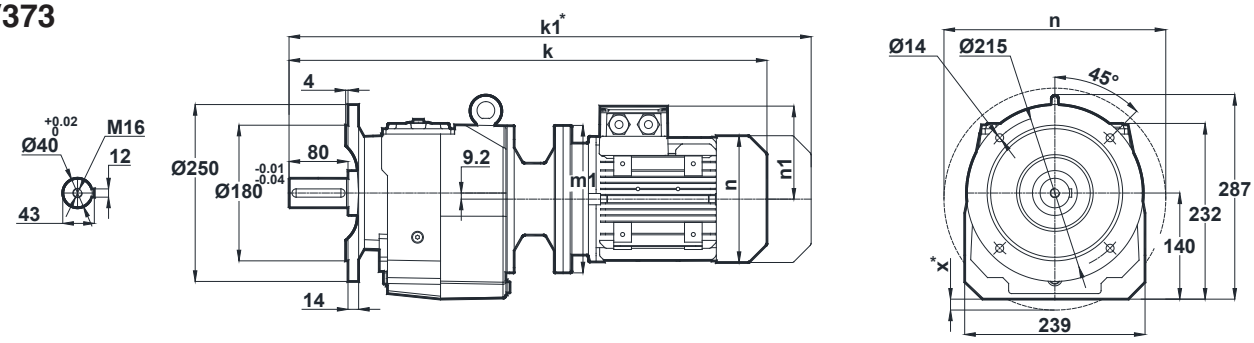

Motor Size								
IEC	71/B5	80/B5 80/B14	90S/B5 90S/B14	90L/B5 90L/B14	100L/B5 100L/B14	112M/B5 112M/B14	132S/B5 132S/B14	132M/B5 132M/B14
k	575	598	639	639	691.5	712	816	816
k1	666	691	742.5	742.5	800	816.5	946	946
n / n1	137 / 112	155 / 121	176 / 132	176 / 132	193 / 147	215 / 158	257 / 179	257 / 179
m1 (B5)	160	200	200	200	250	250	300	300
m1 (B14)	-	120	140	140	160	160	200	200
x (B5)	-	-	-	-	-	-	20	20

Terminal Box

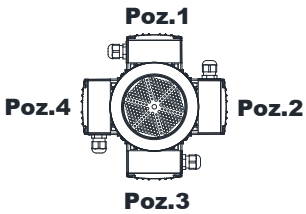

71-80-90-100-112-132

Optional Flange Dimensions

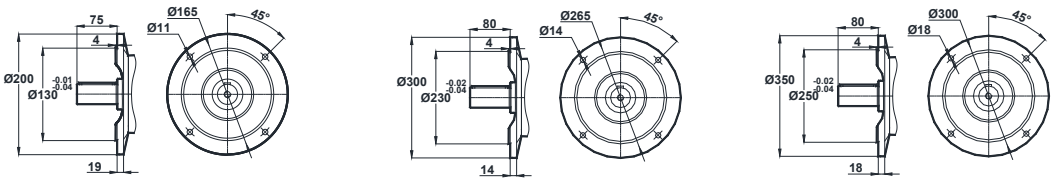

Opt. 1 **Opt. 2** **Opt. 3**

* Dimension " k1" is for motors with brake.
x: If Motor is lower than foot mounting plane

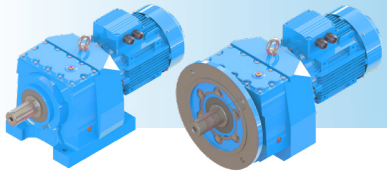

MV / NV - DIMENSION PAGES

Tapped center hole to DIN 332, sheet 2

MV374

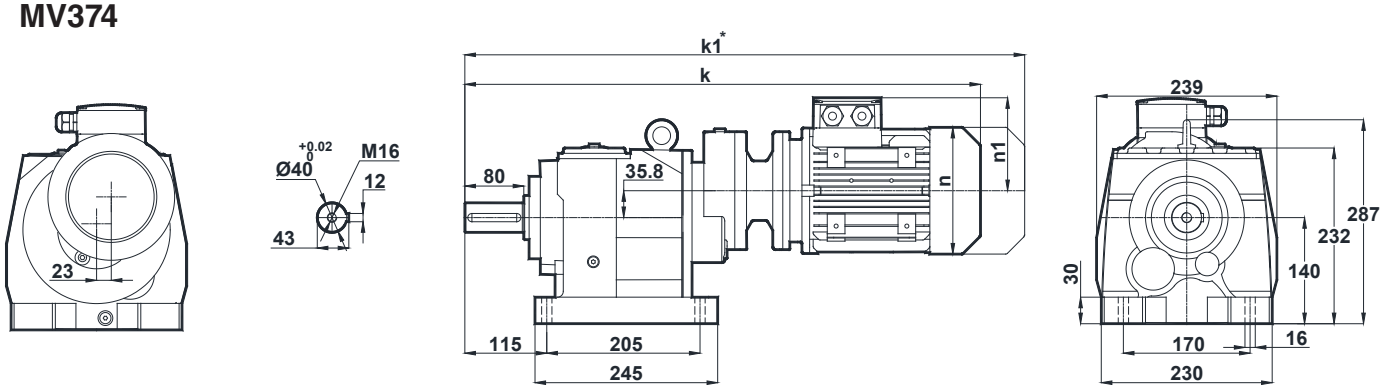

NV374

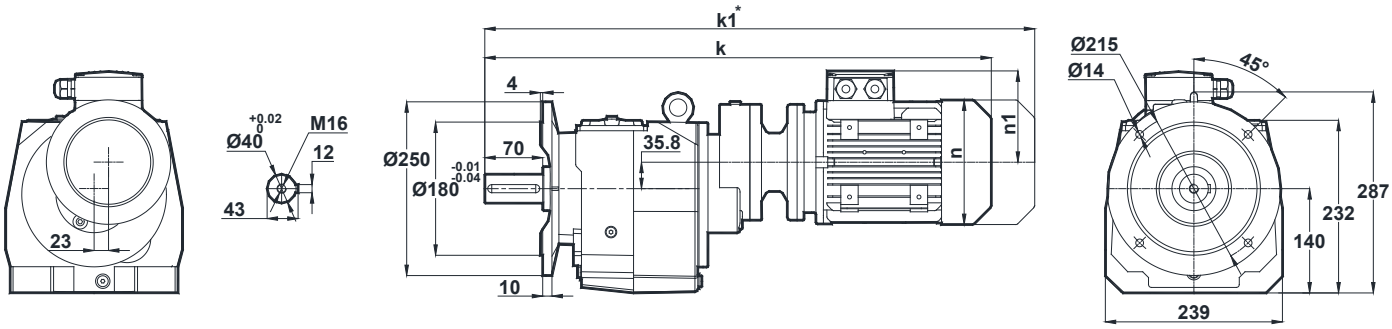

Motor Size			
IEC	63/B5	71/B5 71/B14	80/B5 80/B14
k	634	623	675
k1	695	714	768
n / n1	121 / 97	137 / 112	155 / 121
m1 (B5)	140	160	200
m1 (B14)	-	105	120

Terminal Box

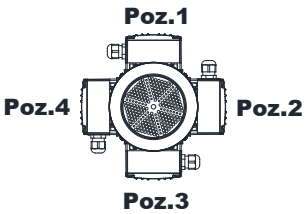

63-71-80

Optional Flange Dimensions

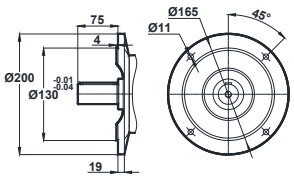

Opt. 1

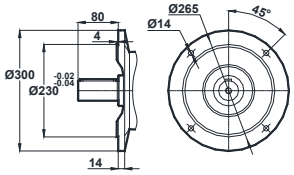

Opt. 2

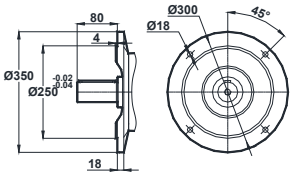

Opt. 3

* Dimension " k1" is for motors with brake.

Tapped center hole to DIN 332, sheet 2

MV375
MV376

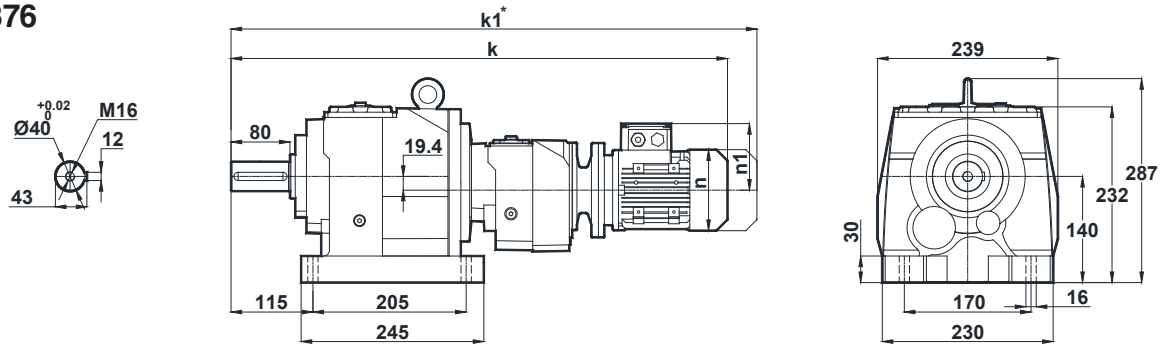

NV375
NV376

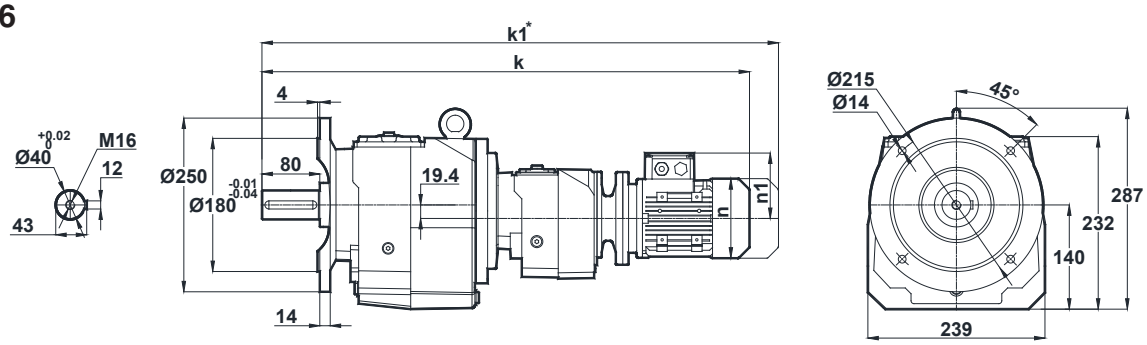

Motor Size	
IEC	63/B5 63/B14
k	702
k1	763
n / n1	121 / 97
m1 (B5)	140
m1 (B14)	90

Terminal Box

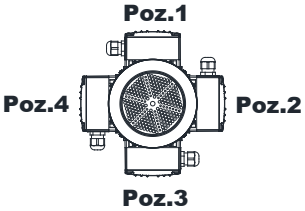

63

Optional Flange Dimensions

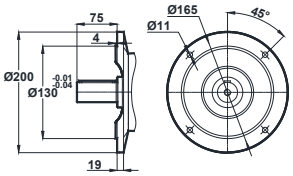

Opt. 1

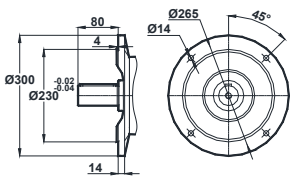

Opt. 2

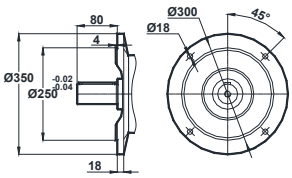

Opt. 3

* Dimension " k1" is for motors with brake.

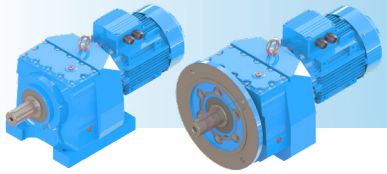

MV / NV - DIMENSION PAGES

Tapped center hole to DIN 332, sheet 2

MV472
MV473

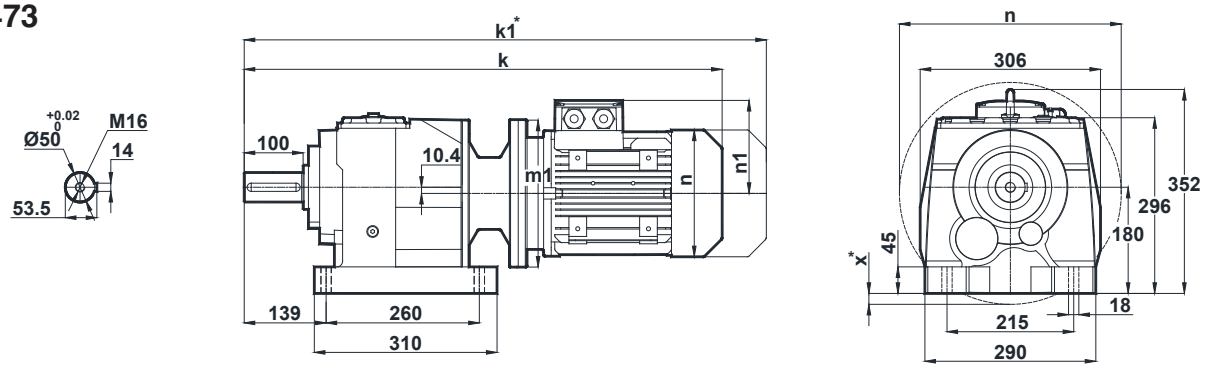

NV472
NV473

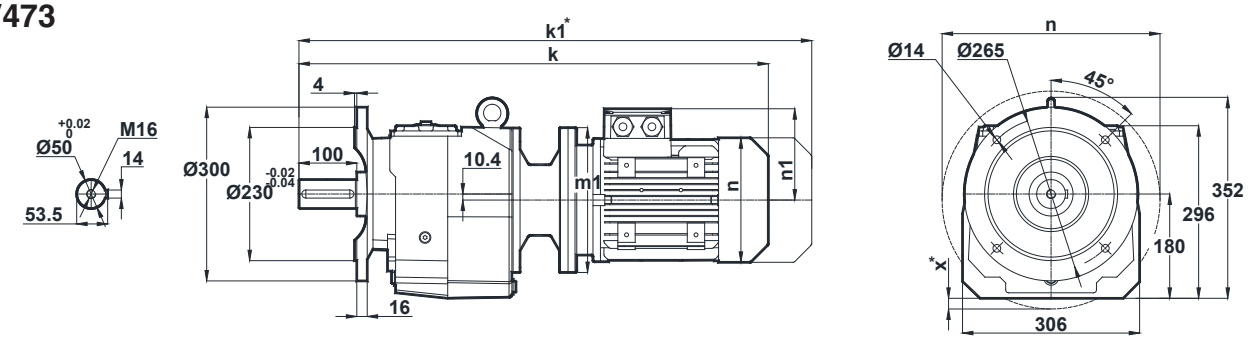

Motor Size											
IEC	80/B5	90S/B5 90S/B14	90L/B5 90L/B14	100L/B5 100L/B14	112M/B5 112M/B14	132S/B5 132S/B14	132M/B5 132M/B14	160M/B5	160L/B5	180M/B5	180L/B5
k	660.5	701.5	701.5	755.5	776	878.5	878.5	1038	1038	1126	1126
k1	753.5	805	805	864	880.5	1008.5	1008.5	1186	1186	1284.5	1284.5
n / n1	155 / 121	176 / 132	176 / 132	193 / 147	215 / 158	257 / 179	257 / 179	315 / 219	315 / 219	347 / 234	347 / 234
m1 (B5)	200	200	200	250	250	300	300	350	350	350	350
m1 (B14)	-	140	140	160	160	200	200	-	-	-	-
x (B5)	-	-	-	-	-	-	-	6	6	6	6

Terminal Box

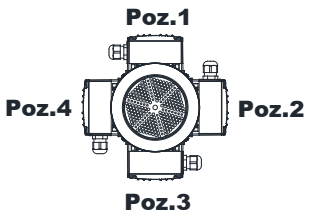

80-90-100-112-132-160-180

Optional Flange Dimensions

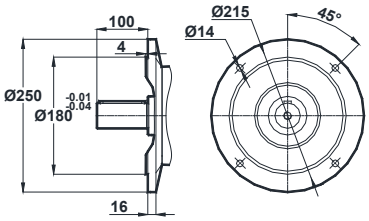

Opt. 1

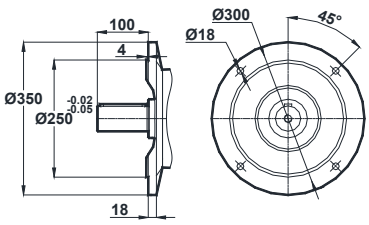

Opt. 2

* Dimension " k1" is for motors with brake.
x: If Motor is lower than foot mounting plane

Tapped center hole to DIN 332, sheet 2

MV474

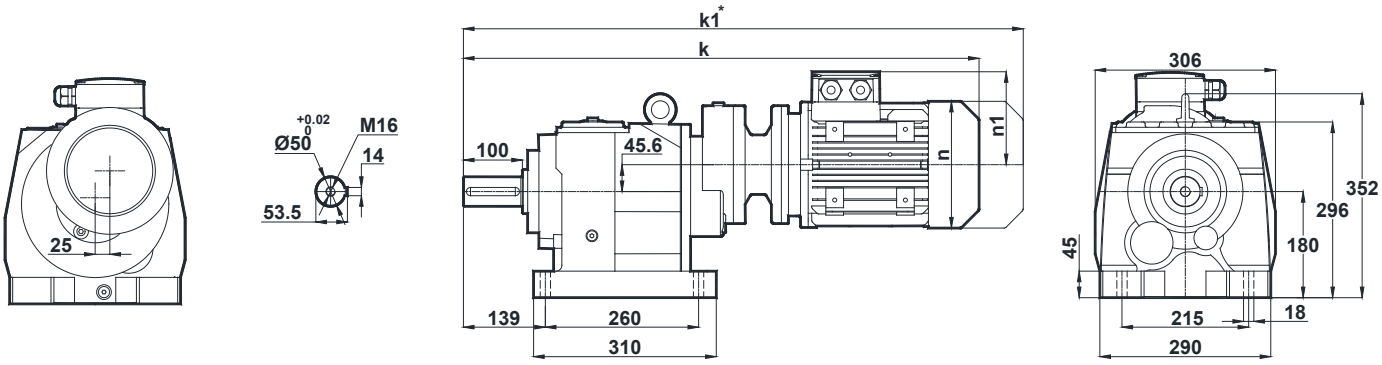

NV474

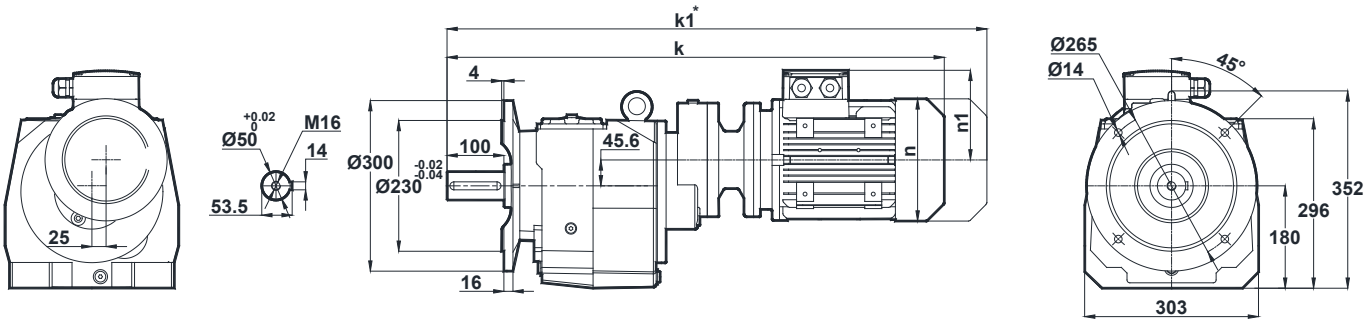

Motor Size		
IEC	71/B5	80/B5 80/B14
k	735.5	758.5
k1	826.5	851.5
n / n1	137 / 112	155 / 121
m1 (B5)	160	200
m1 (B14)	-	120

Terminal Box

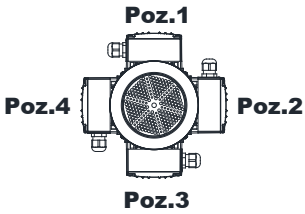

71-80

Optional Flange Dimensions

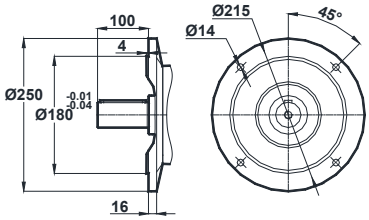

Opt. 1

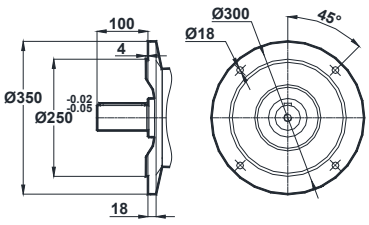

Opt. 2

* Dimension " k1" is for motors with brake.

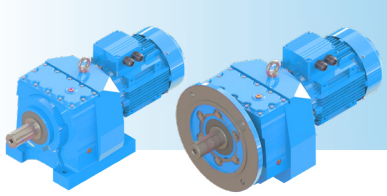

MV / NV - DIMENSION PAGES

Tapped center hole to DIN 332, sheet 2

MV475
MV476

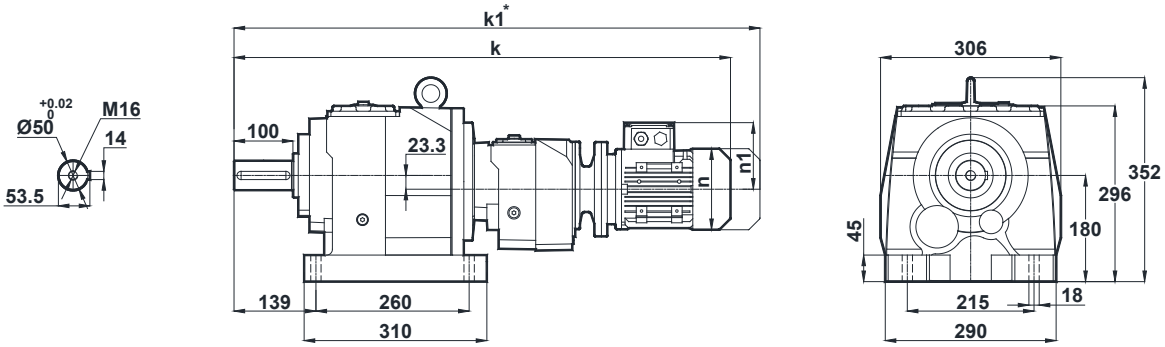

NV475
NV476

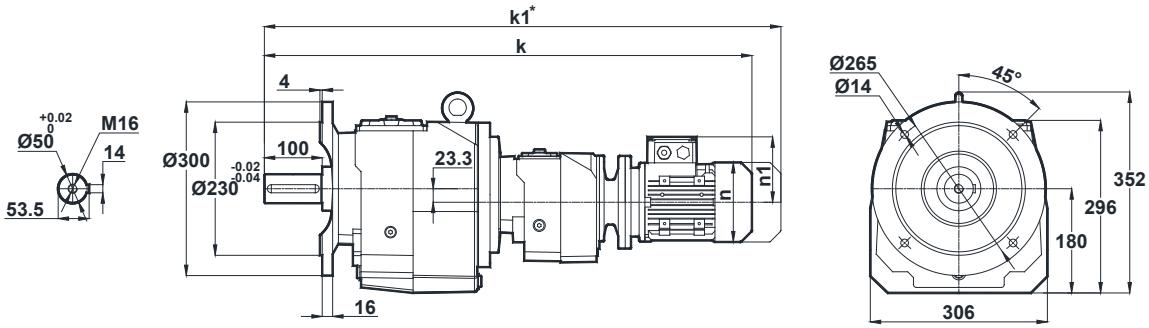

Motor Size		
IEC	63/B5	71/B5 71/B14
k	845.5	834.5
k1	906.5	925.5
n / n1	121 / 97	137 / 112
m1 (B5)	140	160
m1 (B14)	-	105

Terminal Box

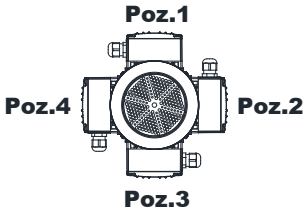

63-71

Optional Flange Dimensions

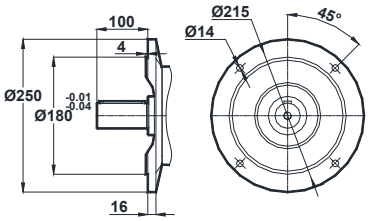

Opt. 1

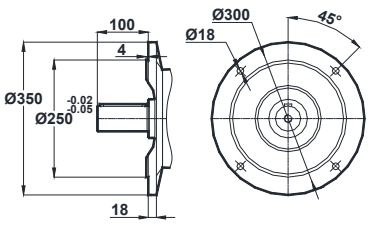

Opt. 2

* Dimension " k1" is for motors with brake.

Tapped center hole to DIN 332, sheet 2

MV572
MV573

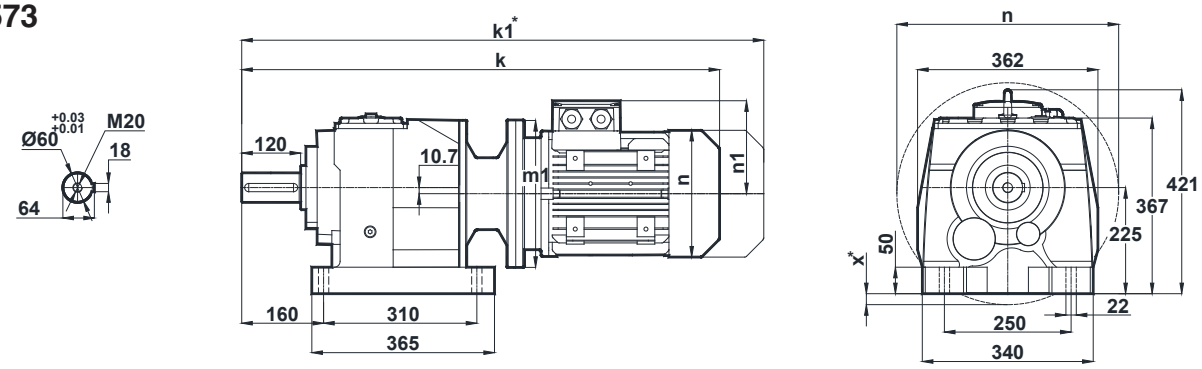

NV572
NV573

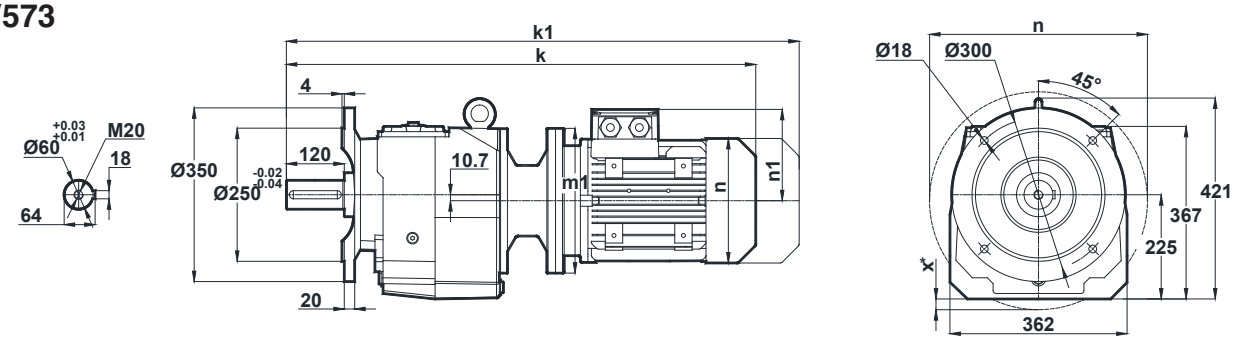

Motor Size									
IEC	100L/B5	112M/B5	132S/B5 132S/B14	132M/B5 132M/B14	160M/B5	160L/B5	180M/B5	180L/B5	200L/B5
k	818	838.5	943.5	943.5	1099	1099	1187	1187	1261
k1	926.5	943	1073.5	1073.5	1247	1247	1345.5	1345.5	1447.5
n / n1	193 / 147	215 / 158	257 / 179	257 / 179	315 / 219	315 / 219	347 / 234	347 / 234	390 / 275
m1 (B5)	250	250	300	300	350	350	350	350	400
m1 (B14)	-	-	200	200	-	-	-	-	-
x (B5)	-	-	-	-	-	-	-	-	-

Terminal Box

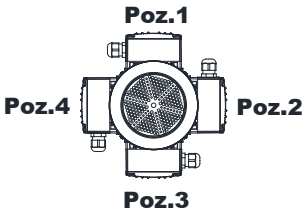

100-112-132-160-180-200

Optional Flange Dimensions

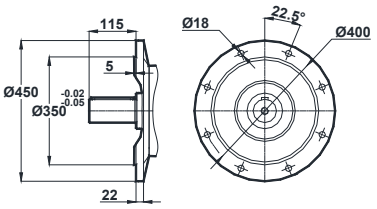

Opt. 1

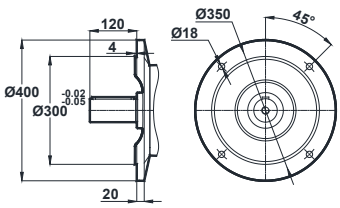

Opt. 2

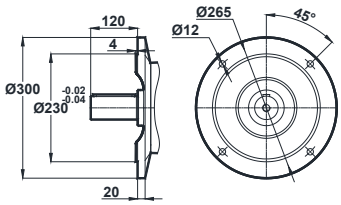

Opt. 3

* Dimension " k1" is for motors with brake.
x: If Motor is lower than foot mounting plane

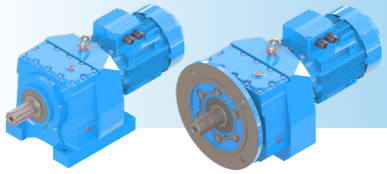

MV / NV - DIMENSION PAGES

Tapped center hole to DIN 332, sheet 2

MV574

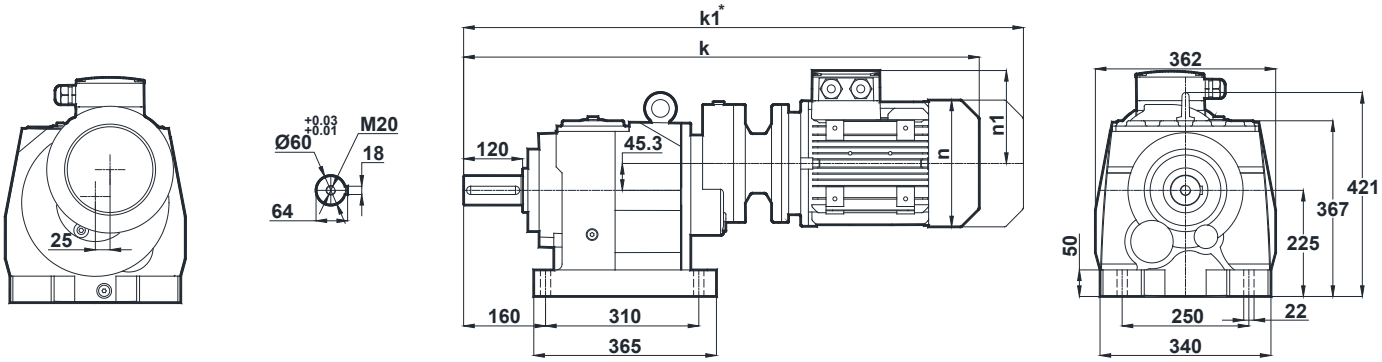

NV574

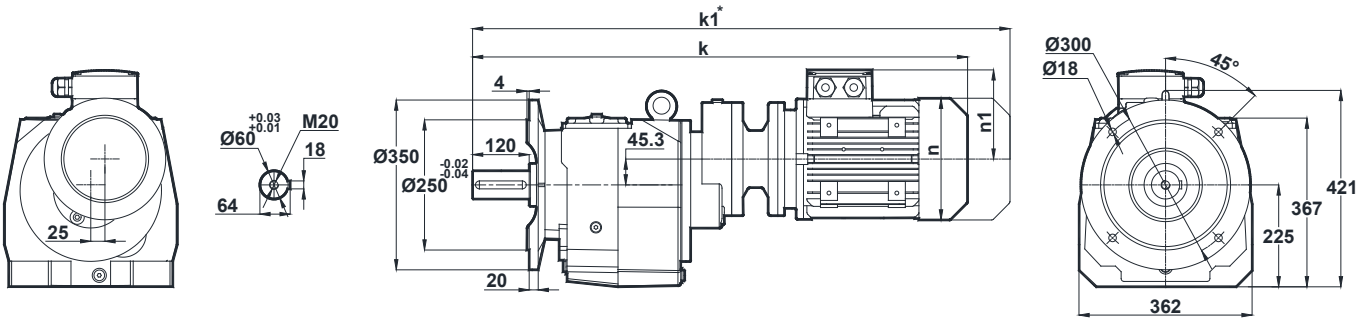

Motor Size					
IEC	71/B5	80/B5 80/B14	90S/B5 90S/B14	90L/B5 90L/B14	100L/B5 100L/B14
k	798.5	821.5	862.5	862.5	915
k1	889.5	914.5	966	966	1023.5
n / n1	137 / 112	155 / 121	176 / 132	176 / 132	193 / 147
m1 (B5)	160	200	200	200	250
m1 (B14)	-	120	140	140	160

Terminal Box

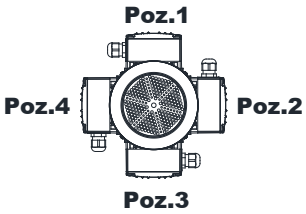

71-80-90

Optional Flange Dimensions

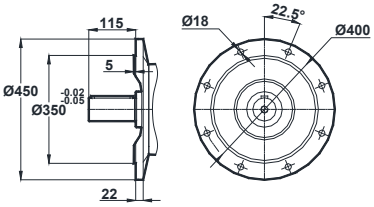

Opt. 1

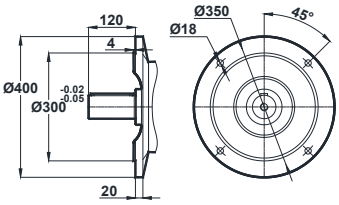

Opt. 2

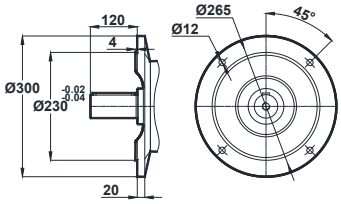

Opt. 3

* Dimension " k1" is for motors with brake.

Tapped center hole to DIN 332, sheet 2

MV575
MV576

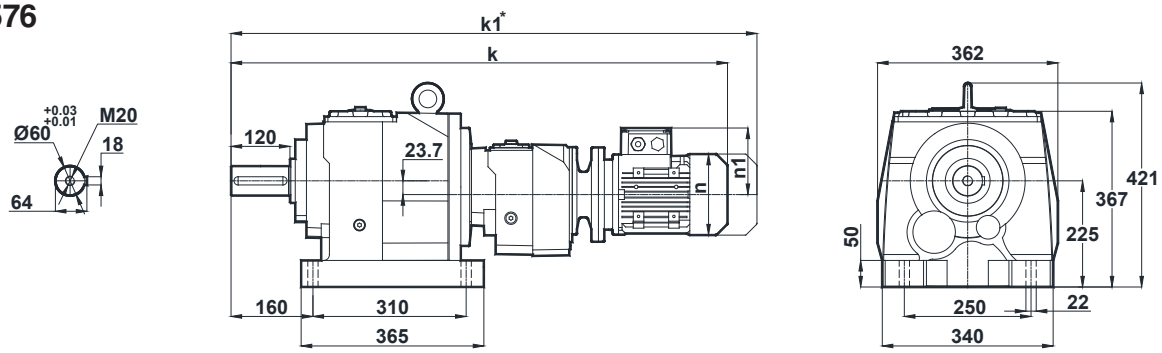

NV575
NV576

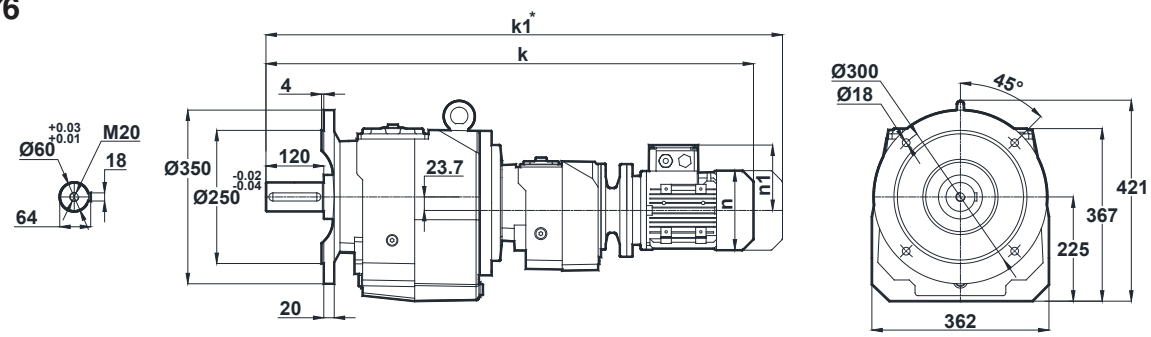

Motor Size		
IEC	63/B5	71/B5 71/B14
k	910.5	899.5
k1	971.5	990.5
n / n1	121 / 97	137 / 112
m1 (B5)	140	160
m1 (B14)	-	105

Terminal Box

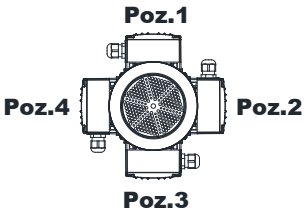

63-71

Optional Flange Dimensions

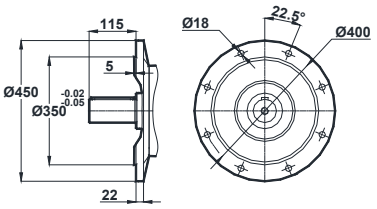

Opt. 1

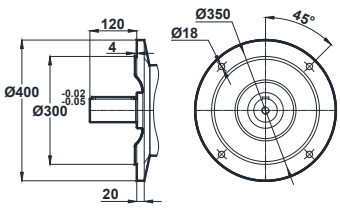

Opt. 2

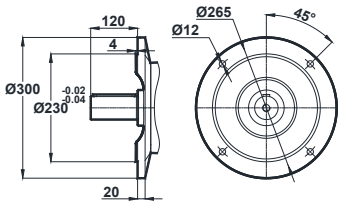

Opt. 3

* Dimension " k1" is for motors with brake.

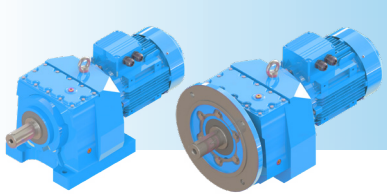

MV / NV - DIMENSION PAGES

Tapped center hole to DIN 332, sheet 2

MV672
MV673

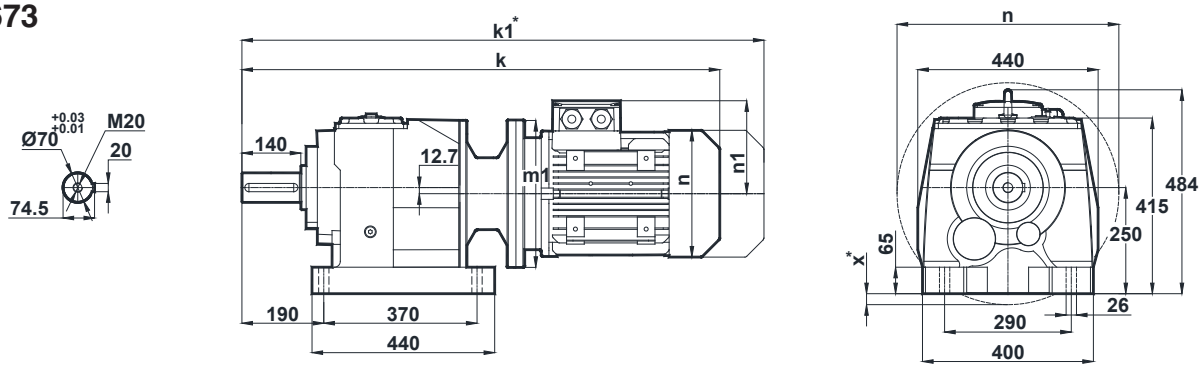

NV672
NV673

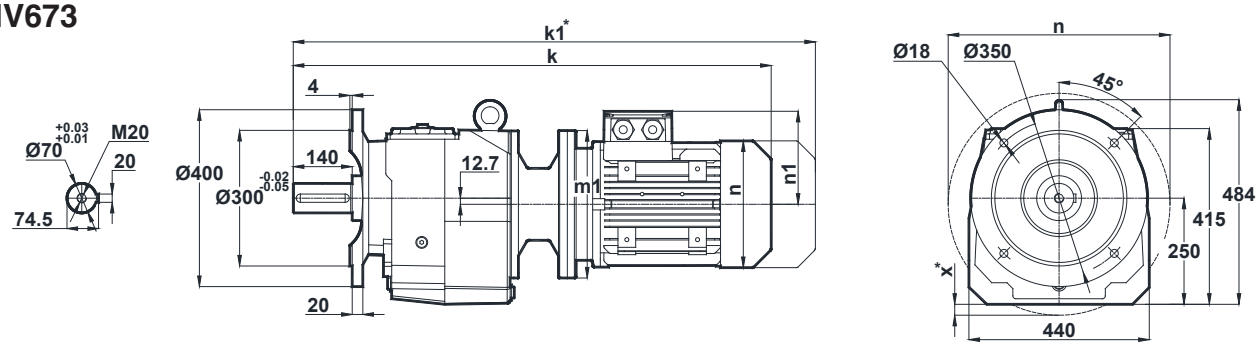

Motor Size										
IEC	112M/B5	132S/B5 132S/B14	132M/B5 132M/B14	160M/B5	160L/B5	180M/B5	180L/B5	200L/B5	225S/B5	225M/B5
k	898.5	997.5	997.5	1152.5	1152.5	1240.5	1240.5	1315	1386	1411
k1	1003	1127.5	1127.5	1300.5	1300.5	1399	1399	1501.5	1551	1576
n / n1	215 / 158	257 / 179	257 / 179	315 / 219	315 / 219	347 / 234	347 / 234	390 / 275	434 / 285	434 / 285
m1 (B5)	250	300	300	350	350	350	350	400	450	450
m1 (B14)	-	200	200	-	-	-	-	-	-	-
x (B5)	-	-	-	-	-	-	-	-	-	-

Terminal Box

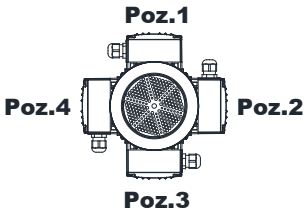

112-132-160-180-200-225

Optional Flange Dimensions

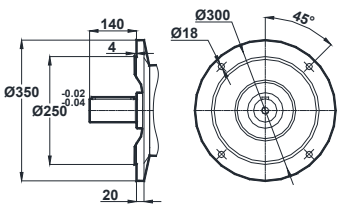

Opt. 1

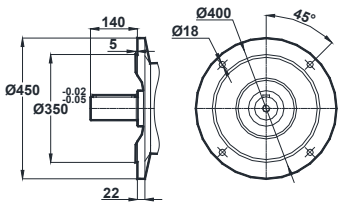

Opt. 2

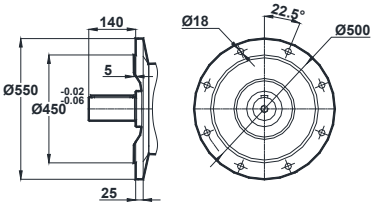

Opt. 3

* Dimension " k1" is for motors with brake.
x: If Motor is lower than foot mounting plane

Tapped center hole to DIN 332, sheet 2

MV674

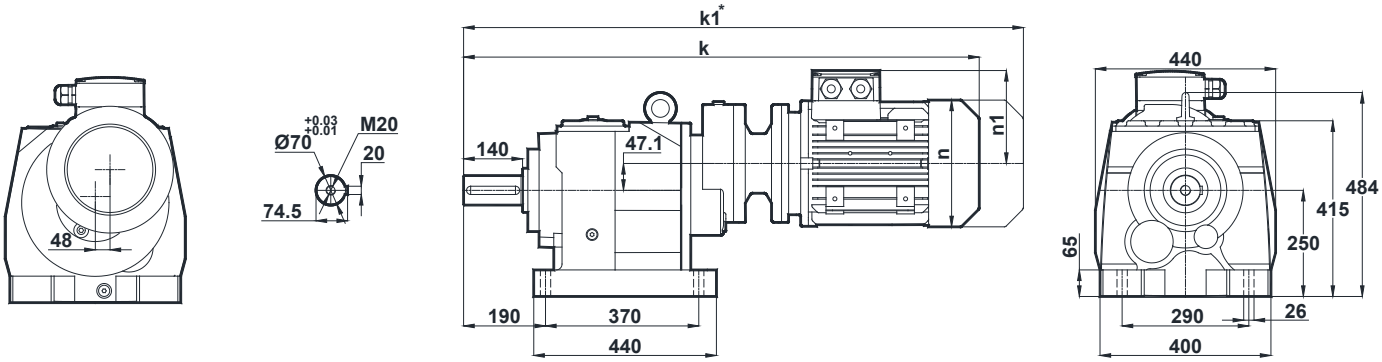

NV674

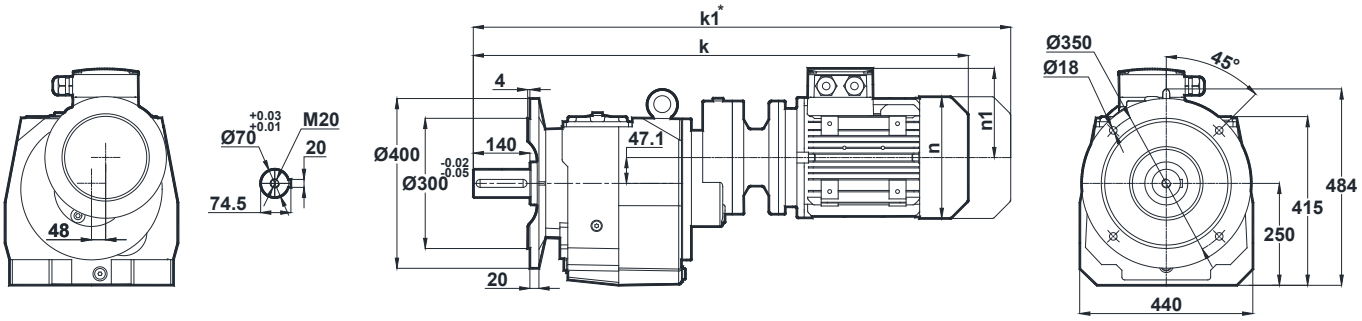

Motor Size			
IEC	80/B5	90S/B5 90S/B14	90L/B5 90L/B14
k	891.5	932.5	932.5
k1	984.5	1036	1036
n / n1	155 / 121	176 / 132	176 / 132
m1 (B5)	200	200	200
m1 (B14)	-	140	140

Terminal Box

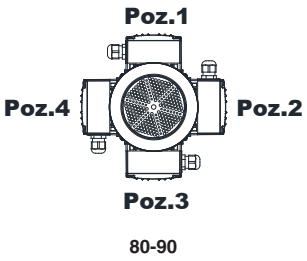

Optional Flange Dimensions

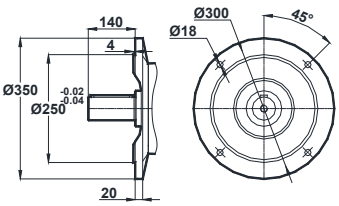

Opt. 1

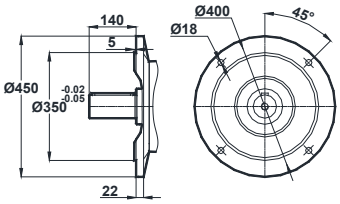

Opt. 2

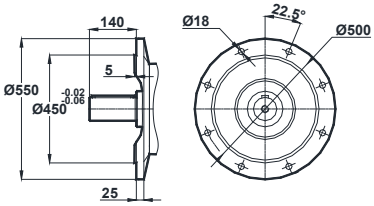

Opt. 3

* Dimension " k1" is for motors with brake.

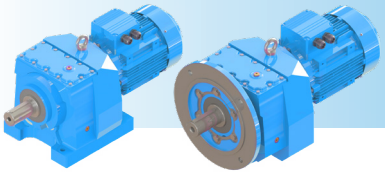

MV / NV - DIMENSION PAGES

Tapped center hole to DIN 332, sheet 2

MV675
MV676

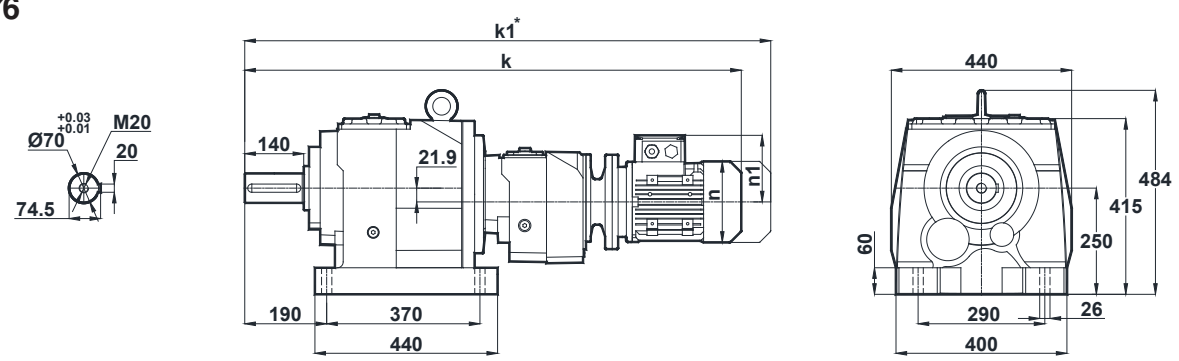

NV675
NV676

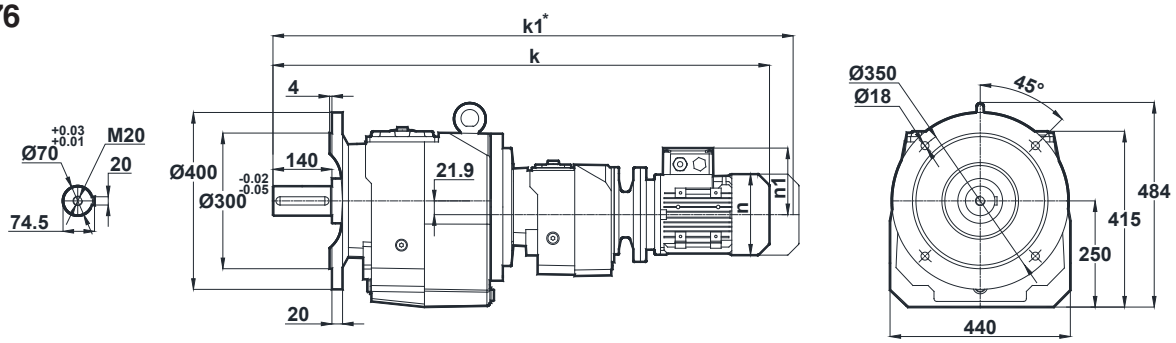

Motor Size		
IEC	71/B5	80/B5 80/B14
k	1019	1042
k1	1110	1135
n / n1	137 / 112	155 / 121
m1 (B5)	160	200
m1 (B14)	-	120

Terminal Box

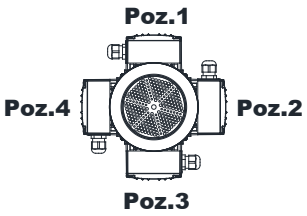

71-80

Optional Flange Dimensions

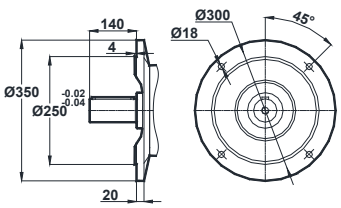

Opt. 1

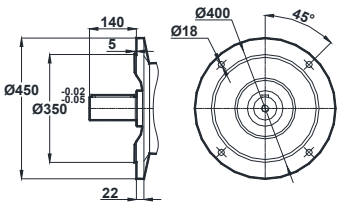

Opt. 2

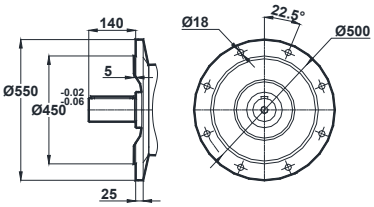

Opt. 3

* Dimension " k1" is for motors with brake.

Tapped center hole to DIN 332, sheet 2

MV772
MV773

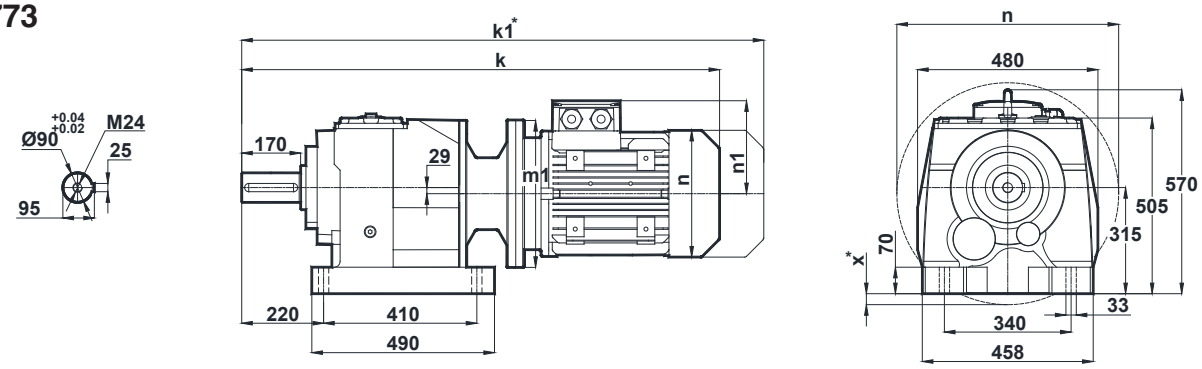

NV772
NV773

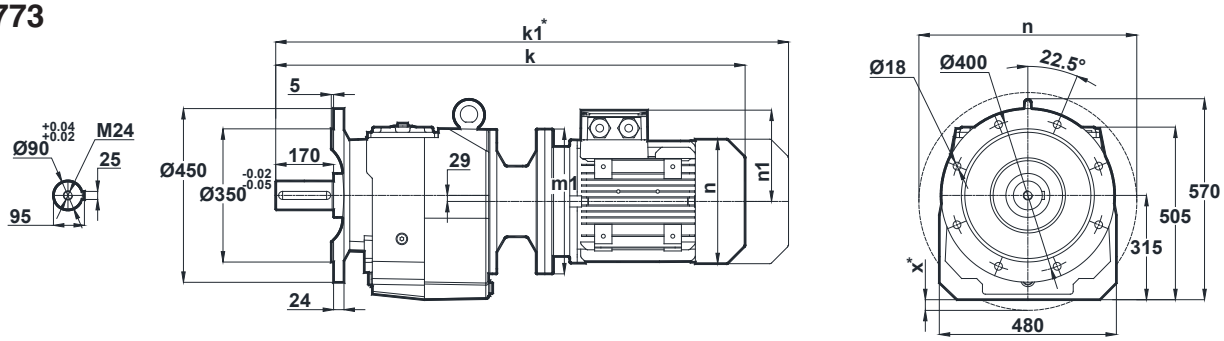

Motor Size										
IEC	132S/B5	132M/B5	160M/B5	160L/B5	180M/B5	180L/B5	200L/B5	225S/B5	225M/B5	250M/B5
k	1082.5	1082.5	1232	1232	1320	1320	1396	1467	1492	1568
k1	1212.5	1212.5	1380	1380	1478.5	1478.5	1582.5	1632	1657	1738.5
n / n1	257 / 179	257 / 179	315 / 219	315 / 219	347 / 234	347 / 234	390 / 275	434 / 285	434 / 285	480 / 322
m1 (B5)	300	300	350	350	350	350	400	450	450	550
m1 (B14)	-	-	-	-	-	-	-	-	-	-
x (B5)	-	-	-	-	-	-	-	-	-	-

Terminal Box

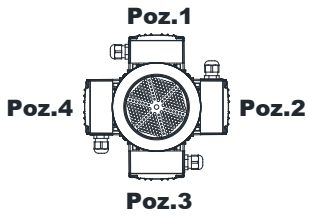

132-160-180-200-225-250

Optional Flange Dimensions

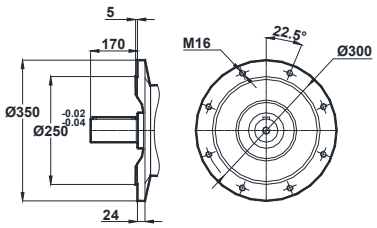

Opt. 1

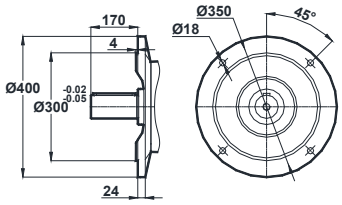

Opt. 2

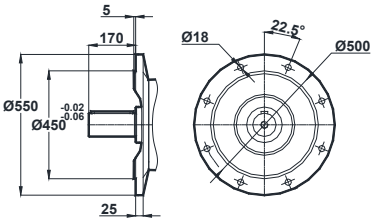

Opt. 3

* Dimension " k1" is for motors with brake.
x: If Motor is lower than foot mounting plane

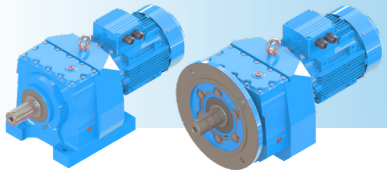

MV / NV - DIMENSION PAGES

Tapped center hole to DIN 332, sheet 2

MV774

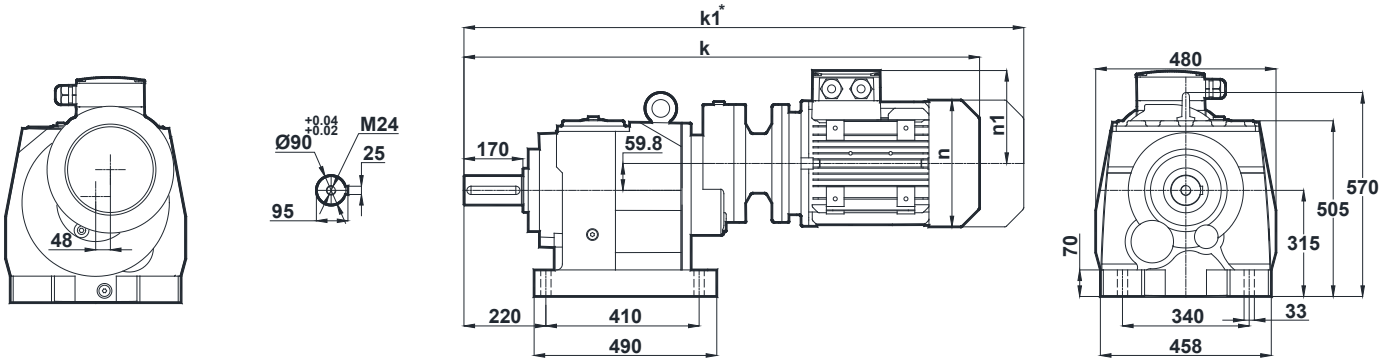

NV774

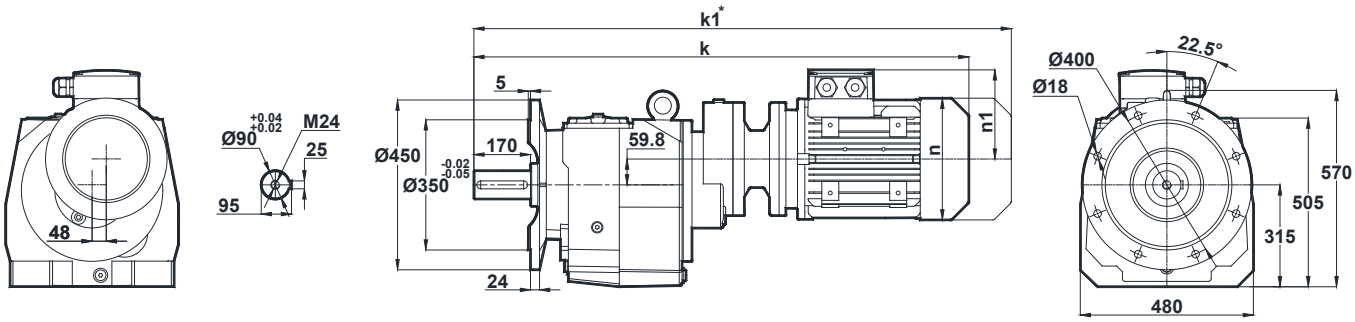

Motor Size				
IEC	80/B5	90S/B5 90S/B14	90L/B5 90L/B14	100L/B5 100L/B14
k	976.5	1017.5	1017.5	1071.5
k1	1069.5	1121	1121	1180
n / n1	155 / 121	176 / 132	176 / 132	193 / 147
m1 (B5)	200	200	200	250
m1 (B14)	-	140	140	160

Terminal Box

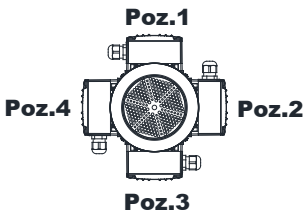

80-90-100

Optional Flange Dimensions

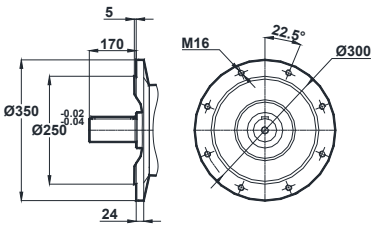

Opt. 1

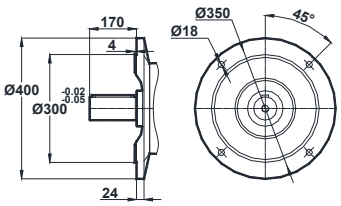

Opt. 2

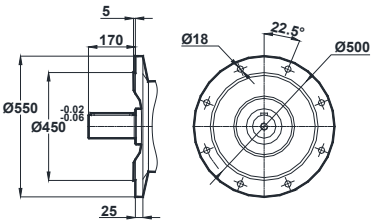

Opt. 3

* Dimension " k1" is for motors with brake.

Tapped center hole to DIN 332, sheet 2

MV775
MV776

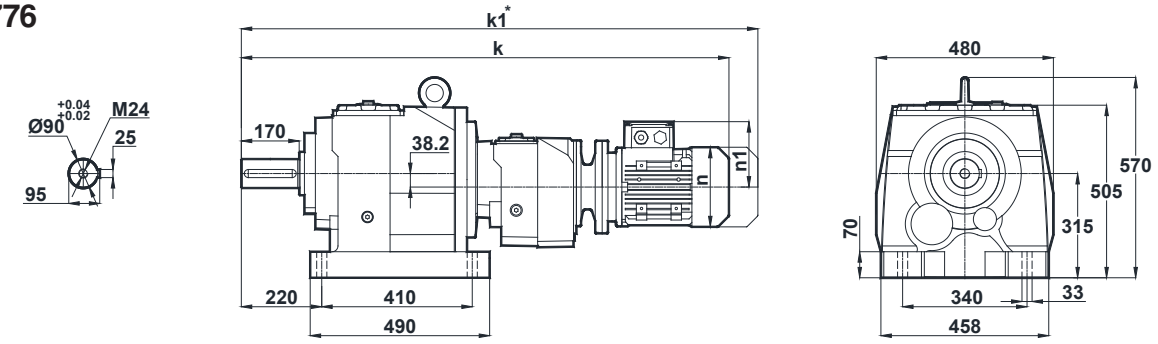

NV775
NV776

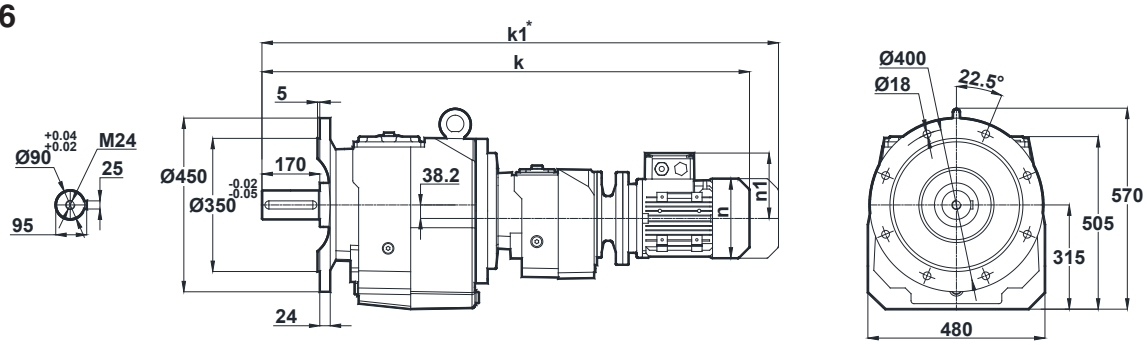

Motor Size				
IEC	71/B5	80/B5 80/B14	90S/B5 90S/B14	90L/B5 90L/B14
k	1107	1130	1171	1171
k1	1198	1223	1274.5	1274.5
n / n1	137 / 112	155 / 121	176 / 132	176 / 132
m1 (B5)	160	200	200	200
m1 (B14)	-	120	140	140

Terminal Box

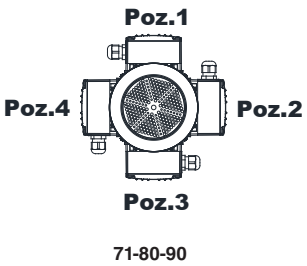

Optional Flange Dimensions

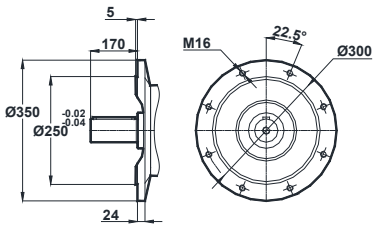

Opt. 1

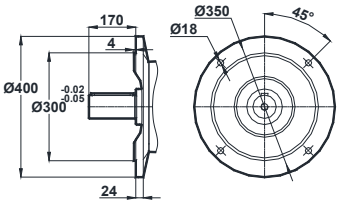

Opt. 2

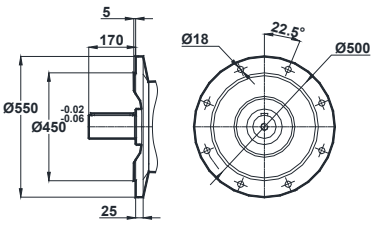

Opt. 3

* Dimension " k1" is for motors with brake.

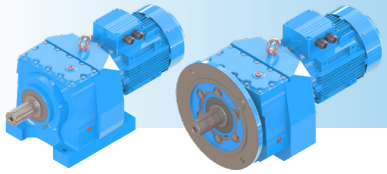

MV / NV - DIMENSION PAGES

Tapped center hole to DIN 332, sheet 2

MV872
MV873

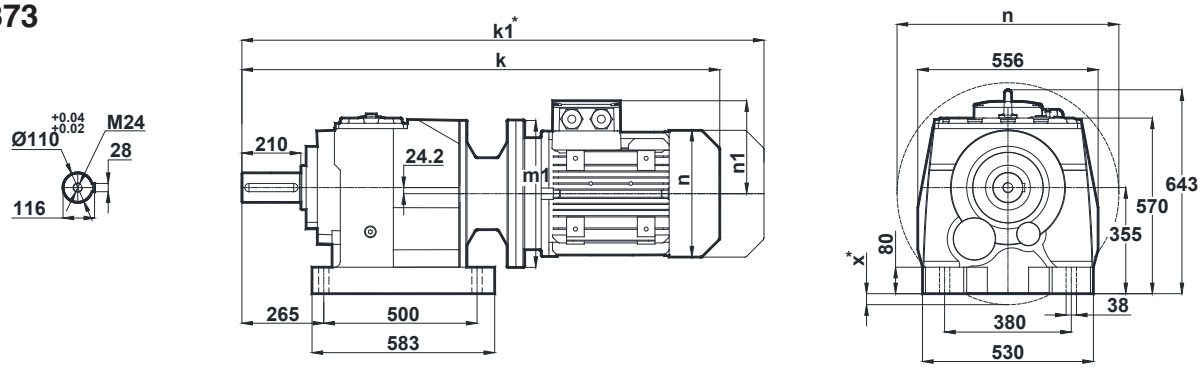

NV872
NV873

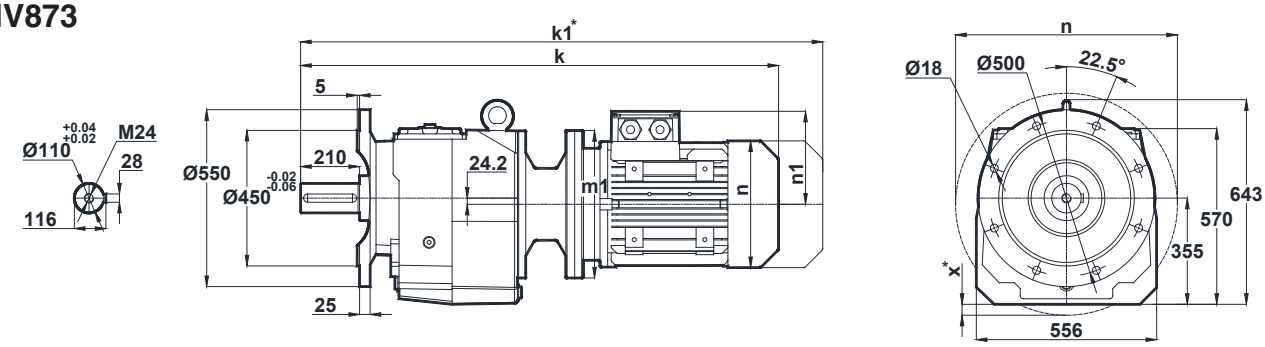

Motor Size										
IEC	160M/B5	160L/B5	180M/B5	180L/B5	200L/B5	225S/B5	225M/B5	250M/B5	280S/B5	280M/B5
k	1418	1418	1506	1506	1560	1578	1603	1679	1741	1741
k1	1566	1566	1664.5	1664.5	1746.5	1743	1768	1849.5	1914	1920
n / n1	315 / 219	315 / 219	347 / 234	347 / 234	390 / 275	434 / 285	434 / 285	480 / 322	544 / 350	544 / 350
m1 (B5)	350	350	350	350	400	450	450	550	550	550
m1 (B14)	-	-	-	-	-	-	-	-	-	-
x (B5)	-	-	-	-	-	-	-	-	-	-

Terminal Box

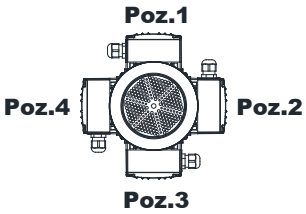

160-180-200-225-250-280

Optional Flange Dimensions

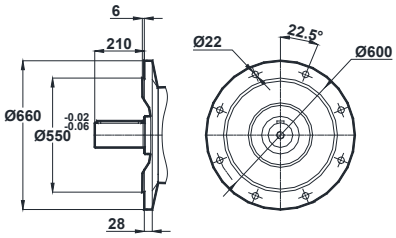

Opt. 1

* Dimension " k1" is for motors with brake.
x: If Motor is lower than foot mounting plane

Tapped center hole to DIN 332, sheet 2

MV874

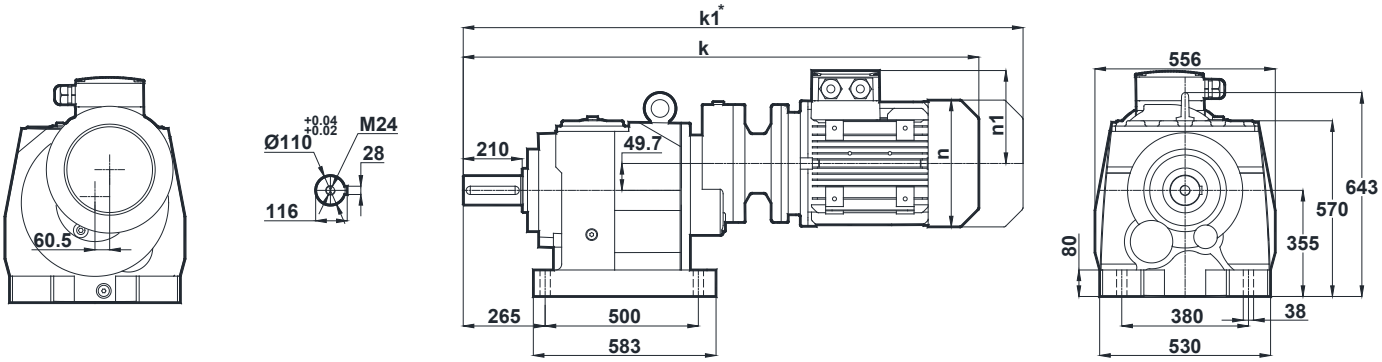

NV874

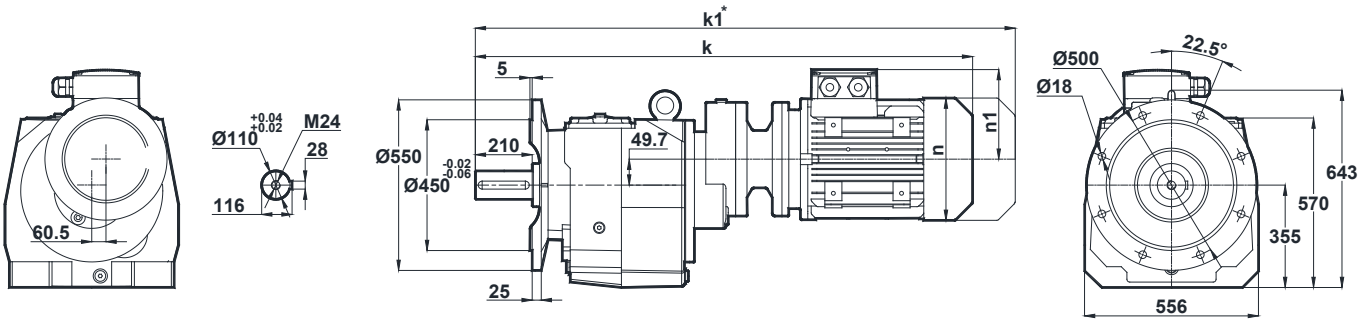

Motor Size				
IEC	100L/B5	112M/B5	132S/B5 132S/B14	132M/B5 132M/B14
k	1206	1226.5	1331.5	1331.5
k1	1314.5	1331	1461.5	1461.5
n / n1	193 / 147	215 / 158	257 / 179	257 / 179
m1 (B5)	250	250	300	300
m1 (B14)	-	-	200	200

Terminal Box

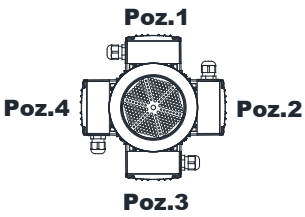

100-112-132

Optional Flange Dimensions

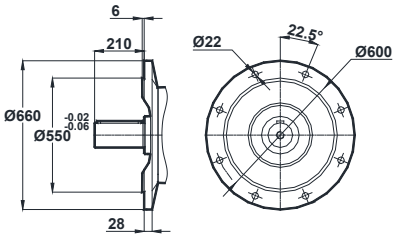

Opt. 1

* Dimension " k1" is for motors with brake.

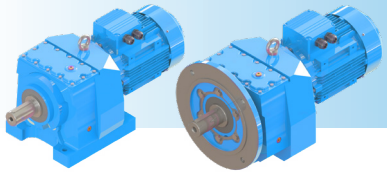

MV / NV - DIMENSION PAGES

Tapped center hole to DIN 332, sheet 2

MV875
MV876

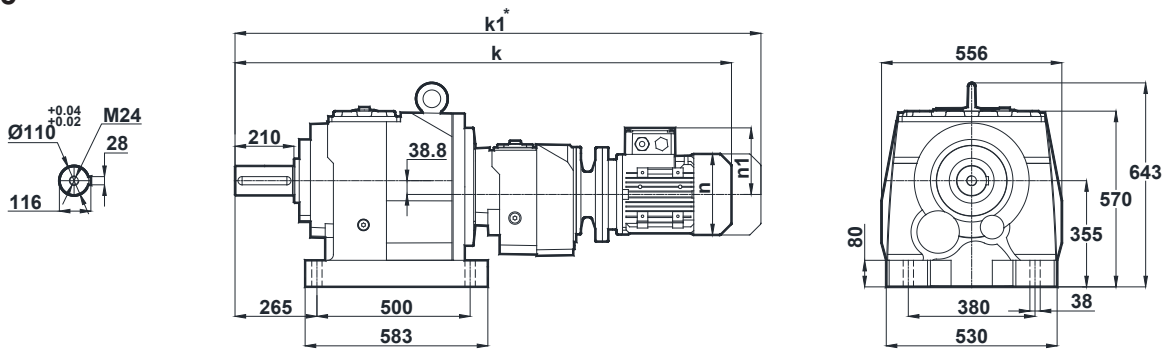

NV875
NV876

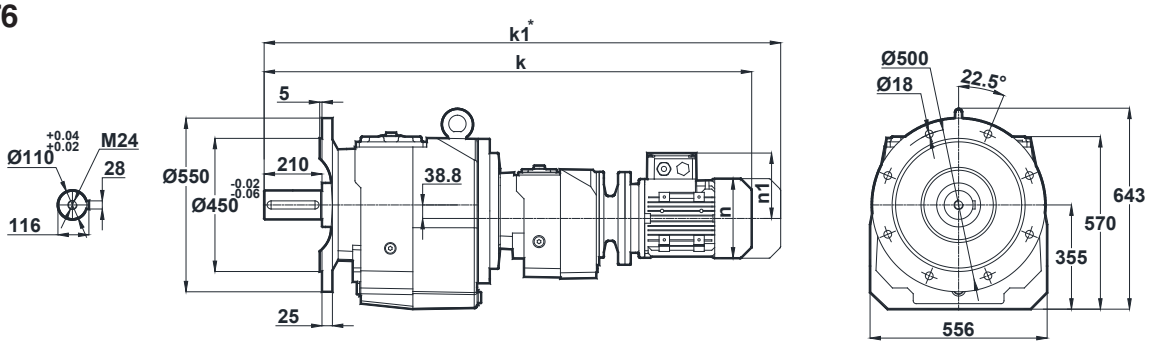

Motor Size					
IEC	71/B5	80/B5 80/B14	90S/B5 90S/B14	90L/B5 90L/B14	100L/B5 100L/B14
k	1224	1247	1288	1288	1340.5
k1	1315	1340	1391.5	1391.5	1449
n / n1	137 / 112	155 / 121	176 / 132	176 / 132	193 / 147
m1 (B5)	160	200	200	200	250
m1 (B14)	-	120	140	140	160

Terminal Box

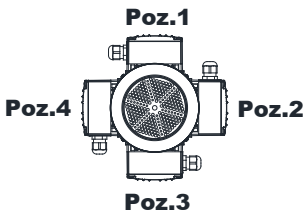

71-80-90-100

Optional Flange Dimensions

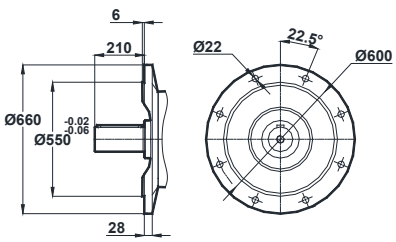

Opt. 1

* Dimension " k1" is for motors with brake.

Tapped center hole to DIN 332, sheet 2

MV972
MV973

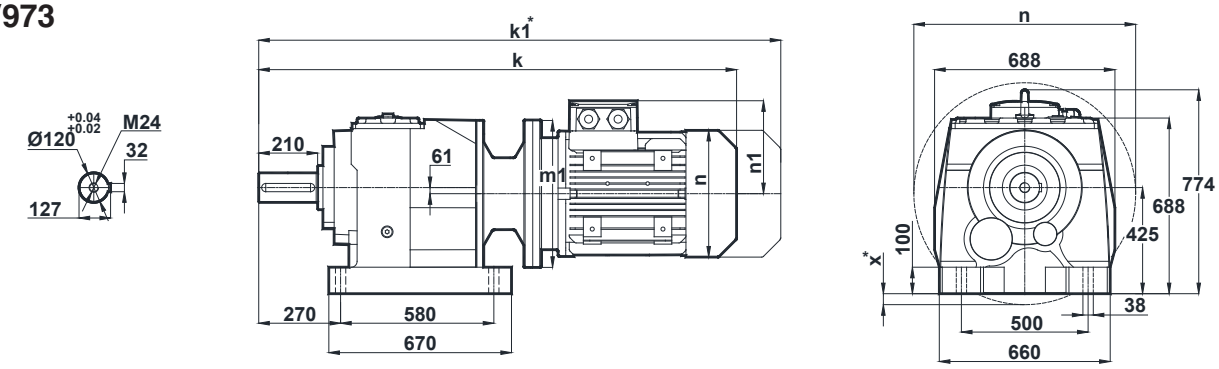

NV972
NV973

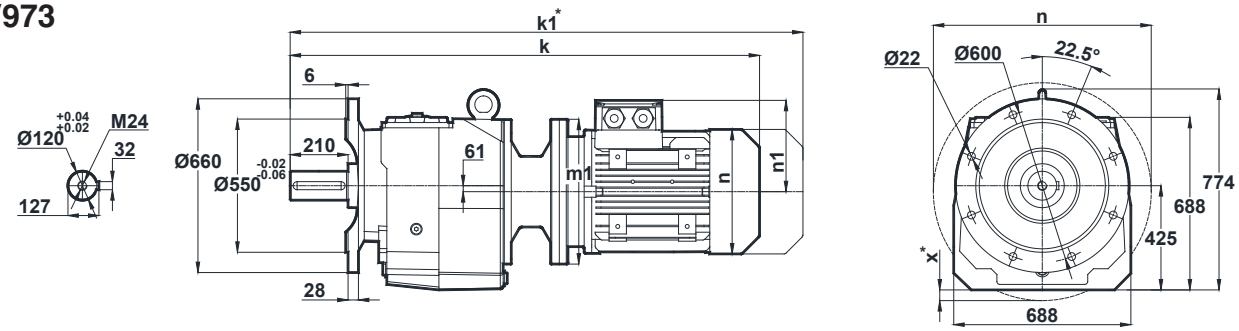

Motor Size												
IEC	160M/B5	160L/B5	180M/B5	180L/B5	200L/B5	225S/B5	225M/B5	250M/B5	280S/B5	280M/B5	315S/B5	315M/B5
k	1405.5	1405.5	1493.5	1493.5	1571.5	1631.5	1656.5	1754.5	1816.5	1816.5	2058.5	2058.5
k1	1553.5	1553.5	1652	1652	1758	1796.5	1821.5	1925	1989.5	1995.5	-	-
n / n1	315 / 219	315 / 219	347 / 234	347 / 234	390 / 275	434 / 285	434 / 285	480 / 322	544 / 350	544 / 350	614 / 510	614 / 510
m1 (B5)	350	350	350	350	400	450	450	550	550	550	660	660
m1 (B14)	-	-	-	-	-	-	-	-	-	-	-	-
x (B5)	-	-	-	-	-	-	-	-	-	-	-	-

Terminal Box

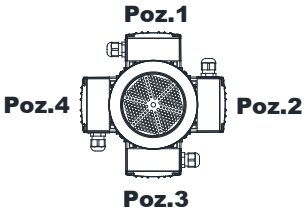

160-180-200-225-250-280-315

* Dimension " k1" is for motors with brake.
x: If Motor is lower than foot mounting plane

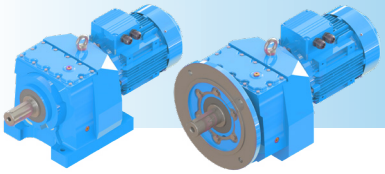

MV / NV - DIMENSION PAGES

Tapped center hole to DIN 332, sheet 2

MV974

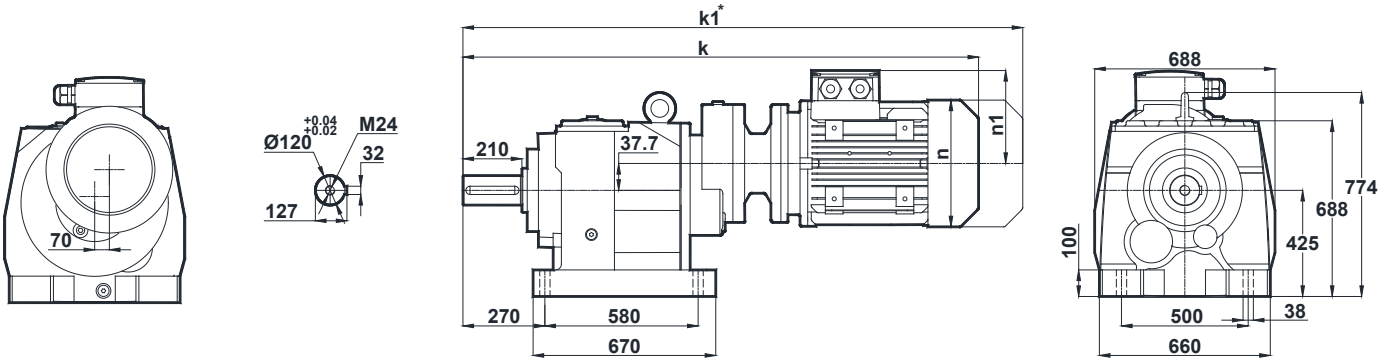

NV974

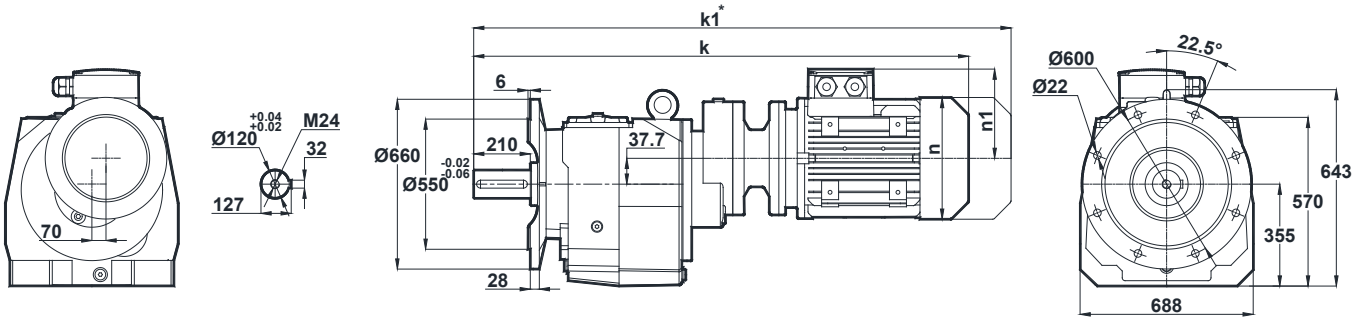

Motor Size				
IEC	100L/B5	112M/B5	132S/B5 132S/B14	132M/B5 132M/B14
k	1309.5	1330	1429	1429
k1	1418	1434.5	1559	1559
n / n1	193 / 147	215 / 158	257 / 179	257 / 179
m1 (B5)	250	250	300	300
m1 (B14)	-	-	200	200

Terminal Box

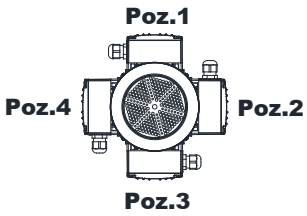

100-112-132

* Dimension " k1" is for motors with brake.

Tapped center hole to DIN 332, sheet 2

MV975
MV976

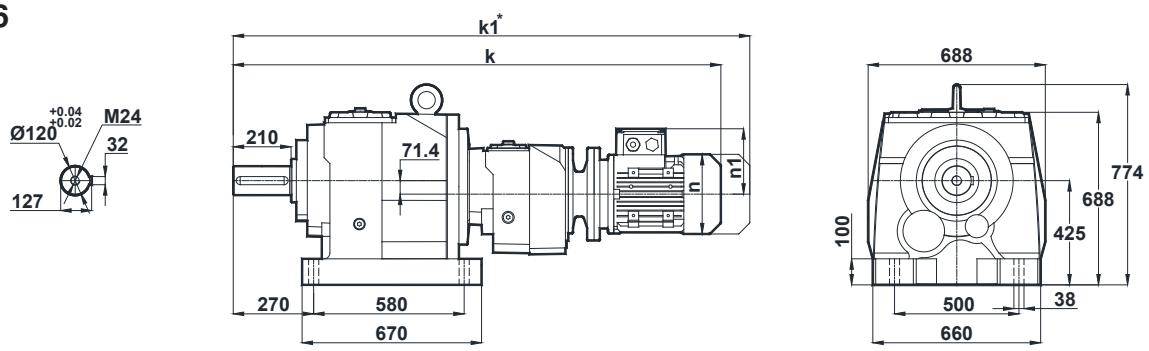

NV975
NV976

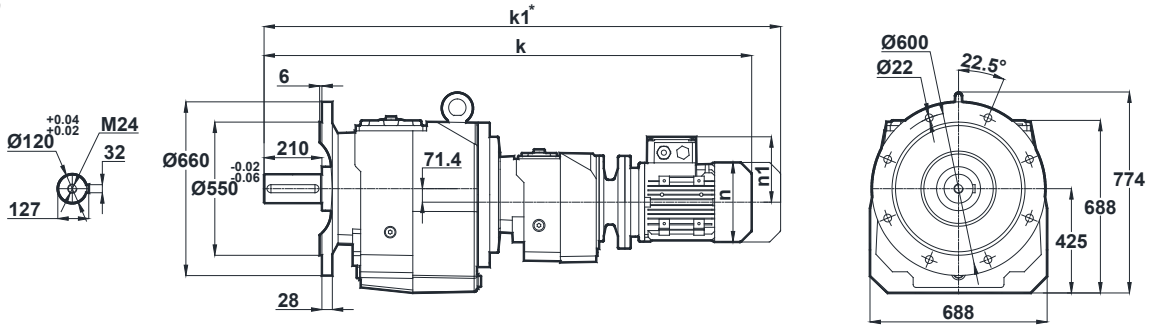

Motor Size						
IEC	80/B5	90S/B5 90S/B14	90L/B5 90L/B14	100L/B5 100L/B14	112M/B5 112M/B14	132S/B5 132S/B14
k	1369	1410	1410	1464	1484.5	1587
k1	1462	1513.5	1513.5	1572.5	1589	1717
n / n1	155 / 121	176 / 132	176 / 132	193 / 147	215 / 158	257 / 179
m1 (B5)	200	200	200	250	250	300
m1 (B14)	-	140	140	160	160	200

Terminal Box

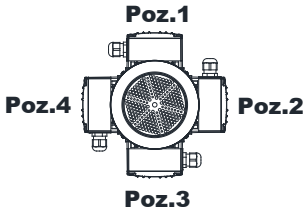

80-90-100-112-132

* Dimension " k1" is for motors with brake.

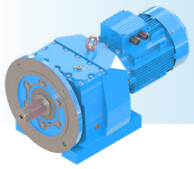

MRF - DIMENSION PAGES

Tapped center hole to DIN 332, sheet 2

MRF002
MRF003

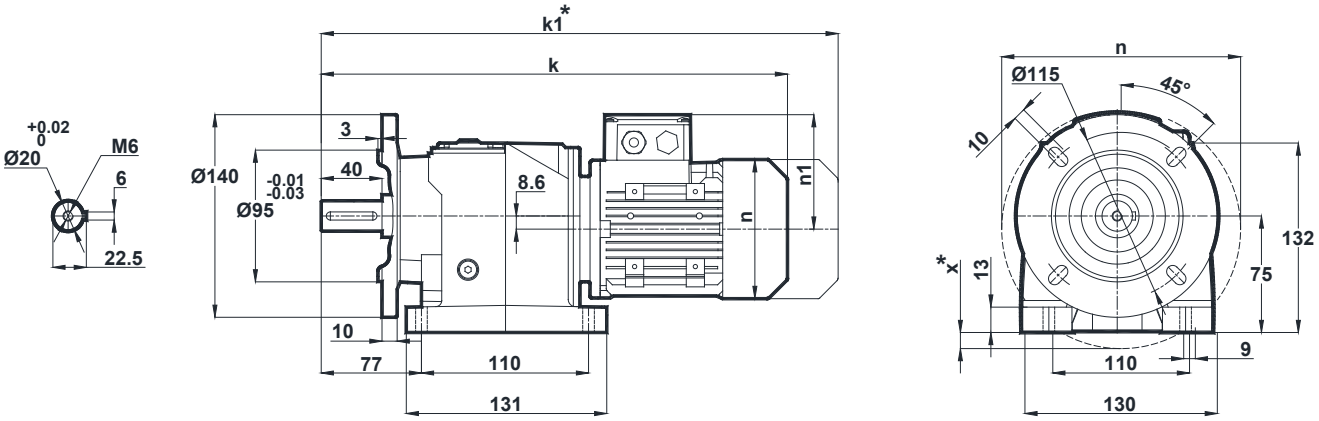

Motor Size					
	63	71	80	90S	90L
k	368.5	397	431	470	470
k1	429.5	488	524	573.5	573.5
n	121	137	155	176	176
n1	97	112	121	132	132
x	-	3	12	22	22

Terminal Box

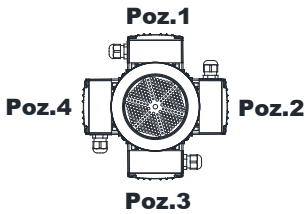

63-71-80-90

Optional Flange Dimensions

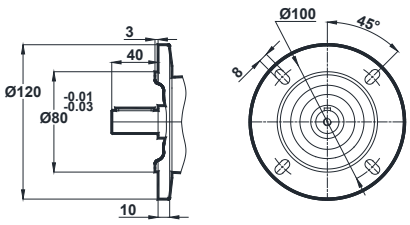

Opt. 1

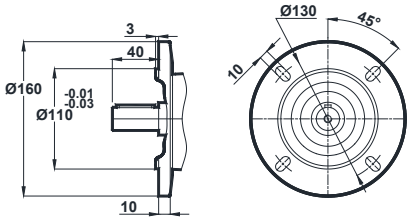

Opt. 2

*Dimension " k1" is for motors with brake.
x: If Motor is lower than foot mounting plane

Tapped center hole to DIN 332, sheet 2

MRF102
MRF103

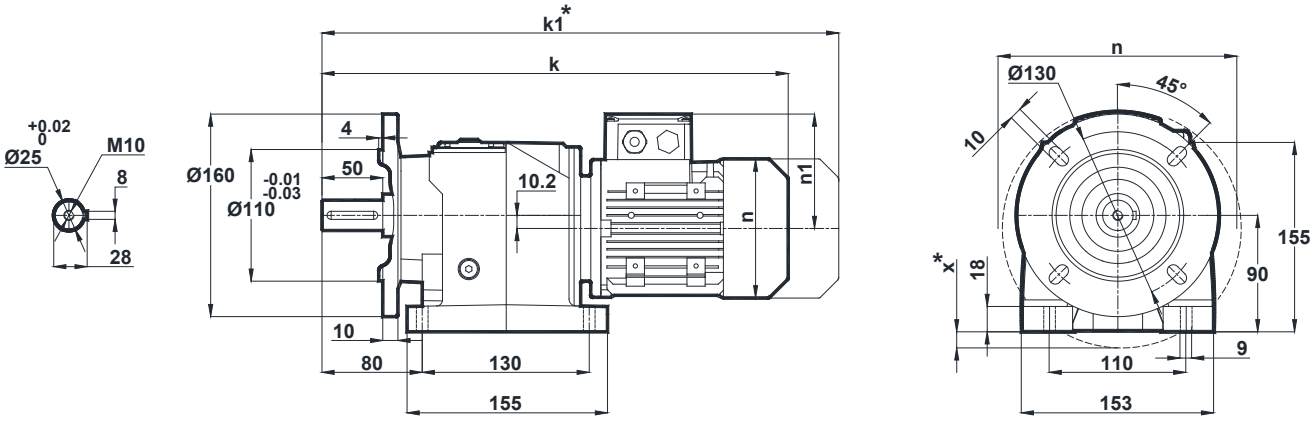

Motor Size					
	63	71	80	90S	90L
k	398	424	458	497	497
k1	459	515	551	600.5	600.5
n	121	137	155	176	176
n1	97	112	121	132	132
x	-	-	-	9	9

Terminal Box

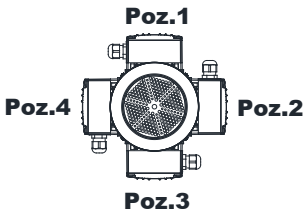

63-71-80-90

Optional Flange Dimensions

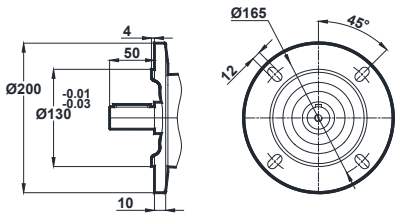

Opt. 1

*Dimension " k1" is for motors with brake.
x: If Motor is lower than foot mounting plane

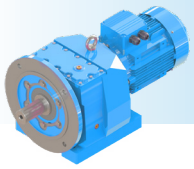

MRF - DIMENSION PAGES

Tapped center hole to DIN 332, sheet 2

MRF172
MRF173

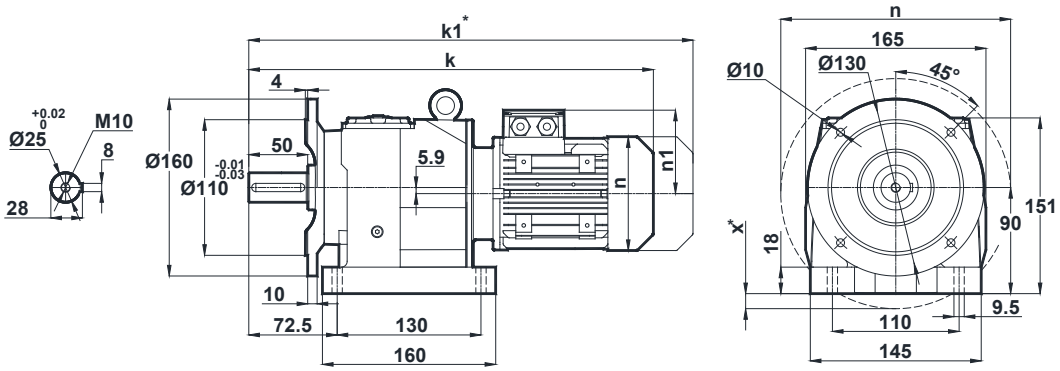

Motor Size							
	63	71	80	90S	90L	100L	112M
k	395.5	424	458	497	497	545	569
k1	456.5	515	551	600.5	600.5	653.5	673.5
n	121	137	155	176	176	193	215
n1	97	112	121	132	132	147	158
x	-	-	-	4	4	13	24

Terminal Box

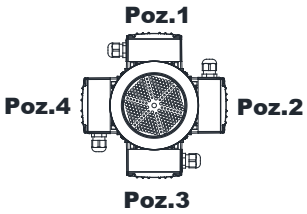

63-71-80-90-100-112

Optional Flange Dimensions

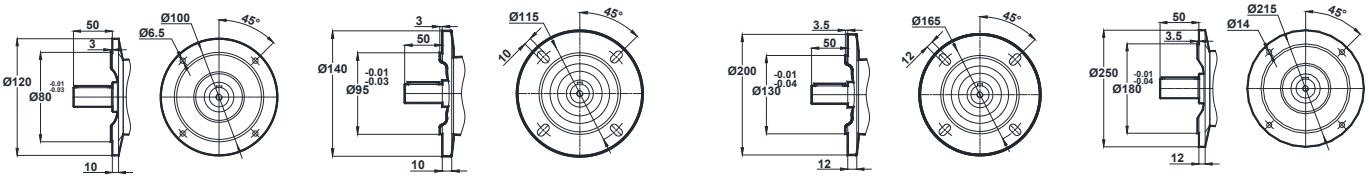

Opt. 1 **Opt. 2** **Opt. 3** **Opt. 4**

*Dimension " k1" is for motors with brake.
x: If Motor is lower than foot mounting plane

Tapped center hole to DIN 332, sheet 2

MRF202
MRF203

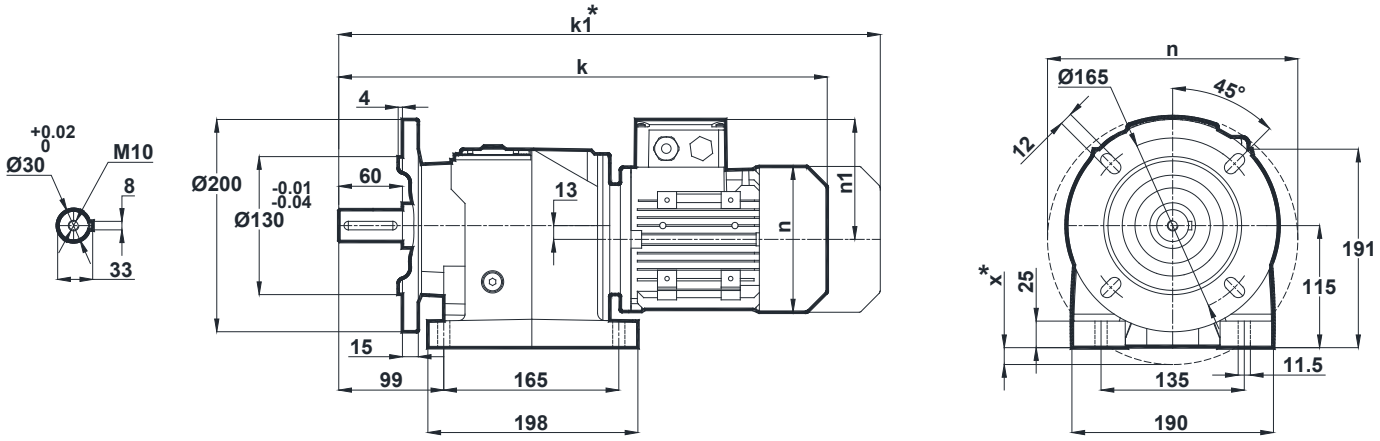

Motor Size							
	63	71	80	90S	90L	100L	112M
k	443	470	504	543	543	591	615
k1	504	561	597	646.5	646.5	699.5	719.5
n	121	137	155	176	176	193	215
n1	97	112	121	132	132	147	158
x	-	-	-	-	-	-	6

Terminal Box

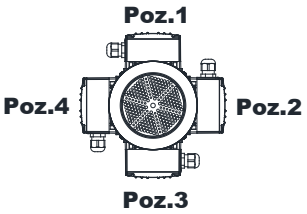

63-71-80-90-100-112

Optional Flange Dimensions

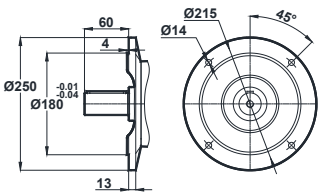

Opt. 1

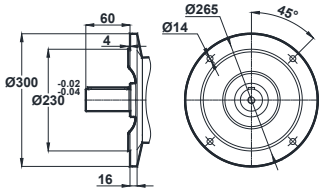

Opt. 2

*Dimension " k1" is for motors with brake.
x: If Motor is lower than foot mounting plane

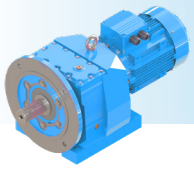

MRF - DIMENSION PAGES

Tapped center hole to DIN 332, sheet 2

MRF272
MRF273

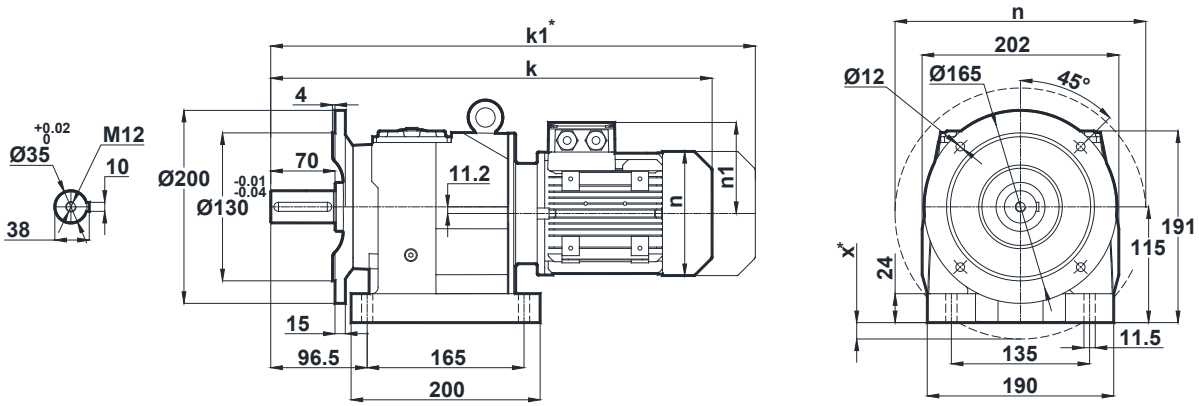

Motor Size									
	63	71	80	90S	90L	100L	112M	132S	132M
k	444	471	505	544	544	592	616	699	699
k1	505	562	598	647.5	647.5	700.5	720.5	829	829
n	121	137	155	176	176	193	215	257	257
n1	97	112	121	132	132	147	158	179	179
x	-	-	-	-	-	-	4	25	25

Terminal Box

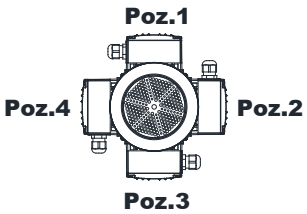

63-71-80-90-100-112-132

Optional Flange Dimensions

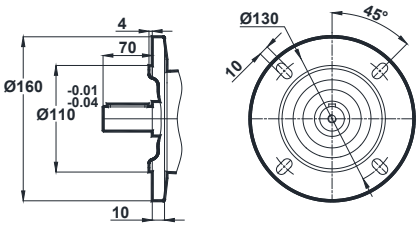

Opt. 1

*Dimension " k1" is for motors with brake.
x: If Motor is lower than foot mounting plane

Tapped center hole to DIN 332, sheet 2

MRF275
MRF276

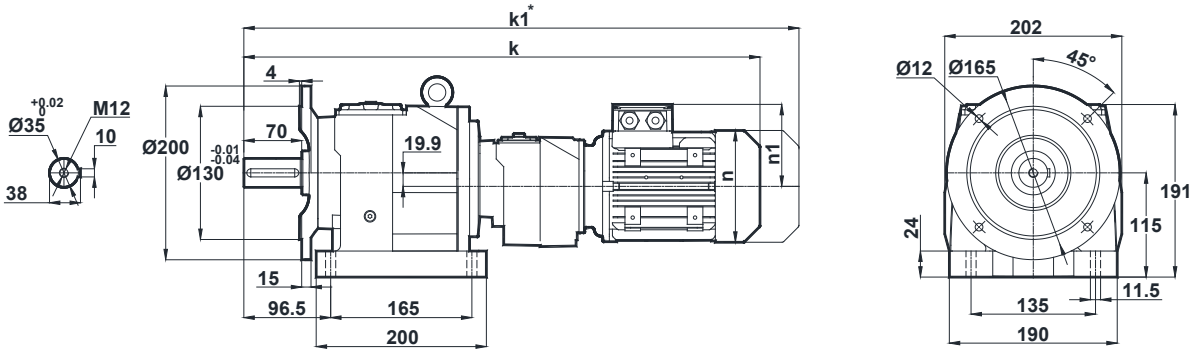

Motor Size		
	63	71
k	593.5	622
k1	645.5	713
n	121	137
n1	97	112

Terminal Box

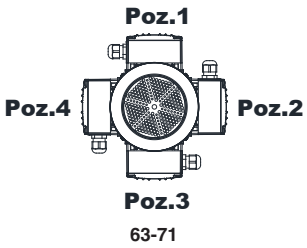

Optional Flange Dimensions

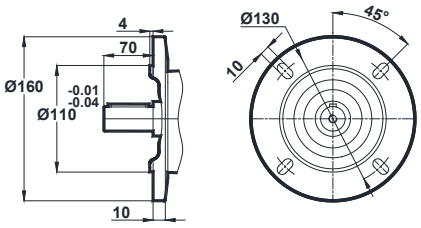

Opt. 1

*Dimension " k1" is for motors with brake.

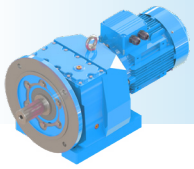

MRF - DIMENSION PAGES

Tapped center hole to DIN 332, sheet 2

MRF282
MRF283

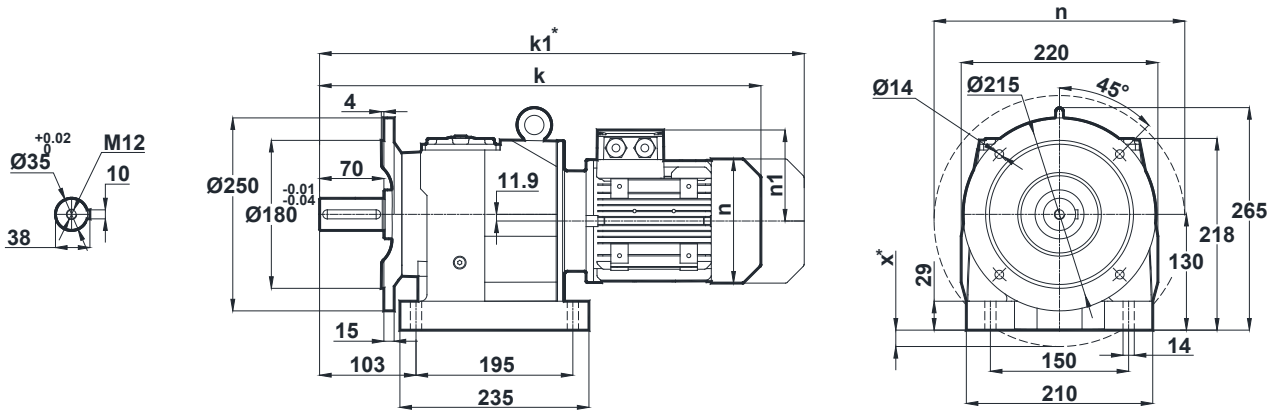

Motor Size								
	71	80	90S	90L	100L	112M	132S	132M
k	488.5	522.5	561.5	561.5	609.5	633.5	720	720
k1	579.5	615.5	665	665	718	738	850	850
n	137	155	176	176	193	215	257	257
n1	112	121	132	132	147	158	179	179
x	-	-	-	-	-	-	11	11

Terminal Box

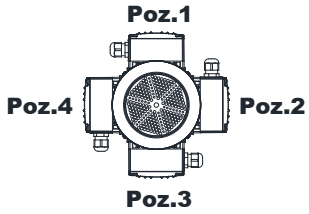

71-80-90-100-112-132

Optional Flange Dimensions

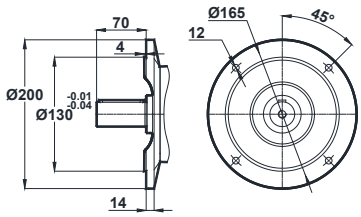

Opt. 1

*Dimension " k1" is for motors with brake.
x: If Motor is lower than foot mounting plane

Tapped center hole to DIN 332, sheet 2

MRF284

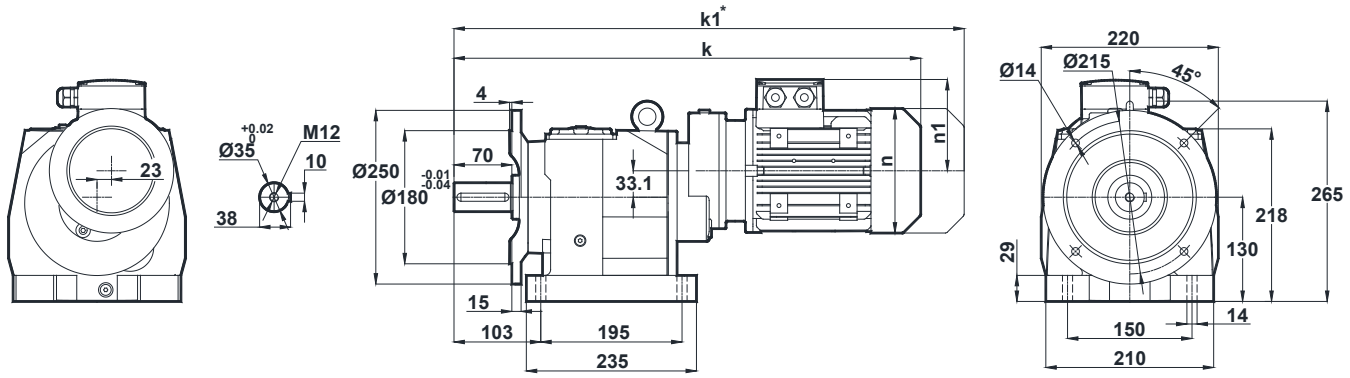

Motor Size		
	63	71
k	540.5	567.5
k1	601.5	658.5
n	121	137
n1	97	112

Terminal Box

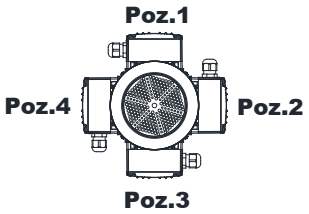

63-71

Optional Flange Dimensions

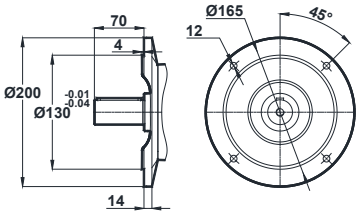

Opt. 1

*Dimension " k1" is for motors with brake.

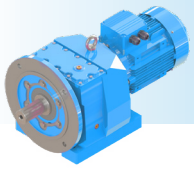

MRF - DIMENSION PAGES

Tapped center hole to DIN 332, sheet 2

MRF285
MRF286

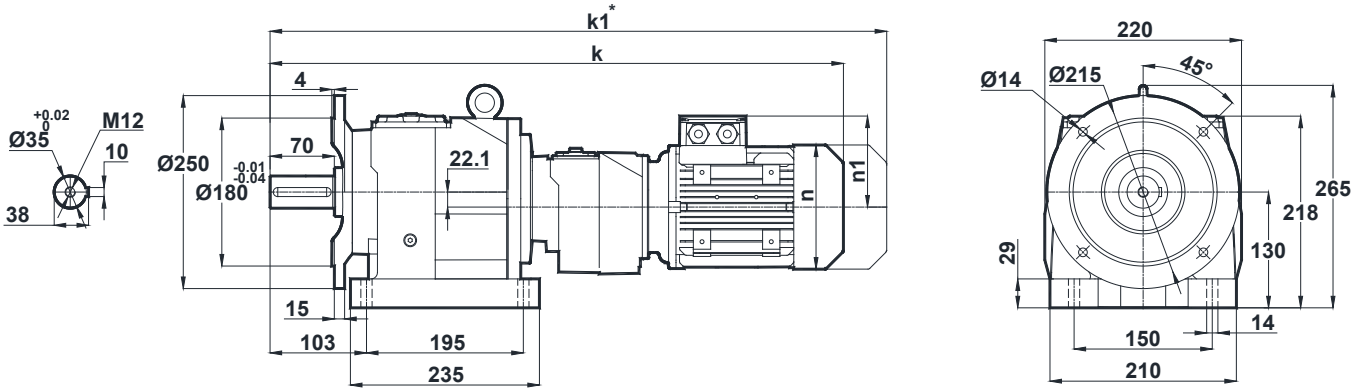

Motor Size	
	63
k	645
k1	706
n	121
n1	97

Terminal Box

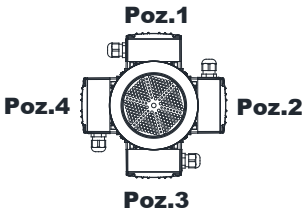

63

Optional Flange Dimensions

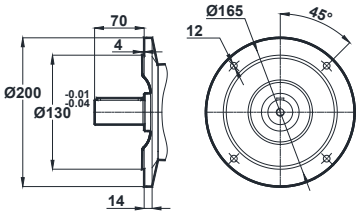

Opt. 1

*Dimension " k1" is for motors with brake.

Tapped center hole to DIN 332, sheet 2

MRF372
MRF373

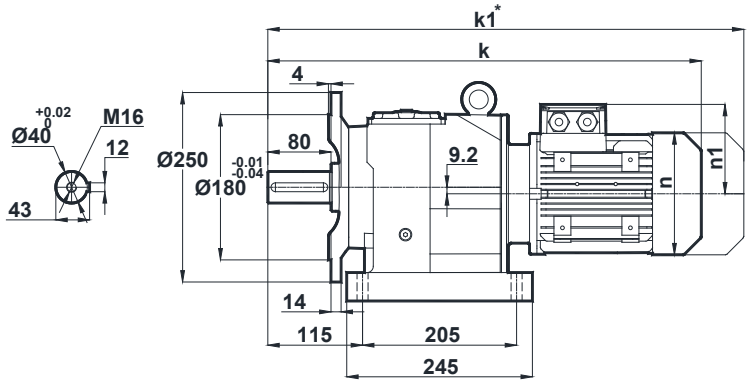

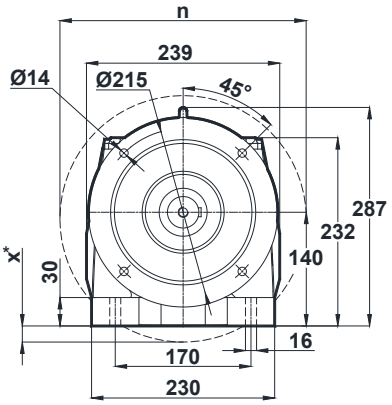

Motor Size								
	71	80	90S	90L	100L	112M	132S	132M
k	509.5	543.5	582.5	582.5	630.5	654.5	741	741
k1	600.5	636.5	686	686	739	759	871	871
n	137	155	176	176	193	215	257	257
n1	112	121	132	132	147	158	179	179
x	-	-	-	-	-	-	-	-

Terminal Box

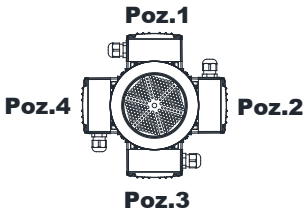

71-80-90-100-112-132

Optional Flange Dimensions

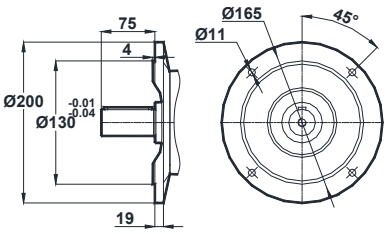

Opt. 1

*Dimension " k1" is for motors with brake.
x: If Motor is lower than foot mounting plane

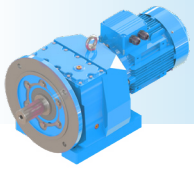

MRF - DIMENSION PAGES

Tapped center hole to DIN 332, sheet 2

MRF374

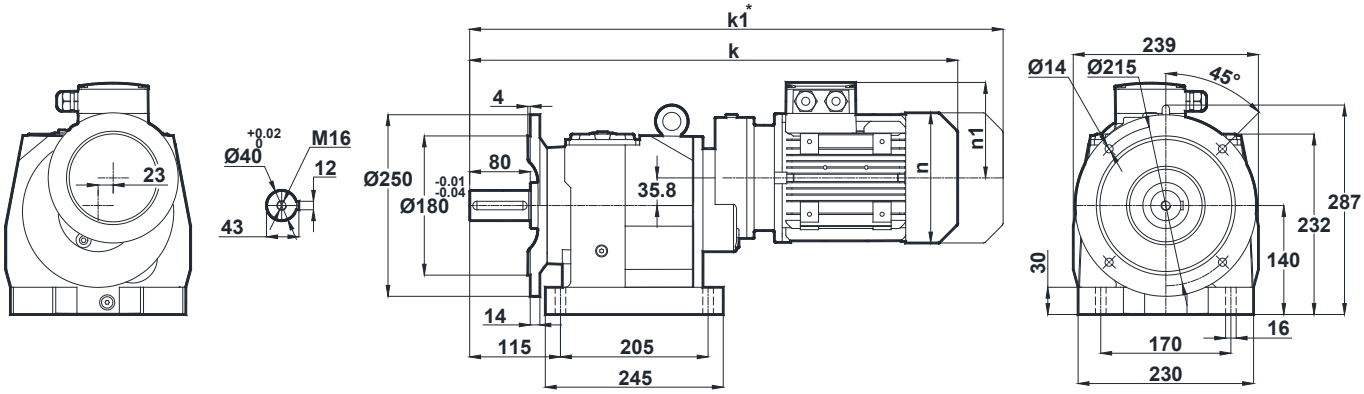

Motor Size			
	63	71	80
k	561.5	588.5	622.5
k1	622.5	679.5	715.5
n	121	137	155
n1	97	112	121

Terminal Box

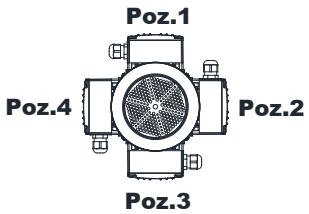

63-71-80

Optional Flange Dimensions

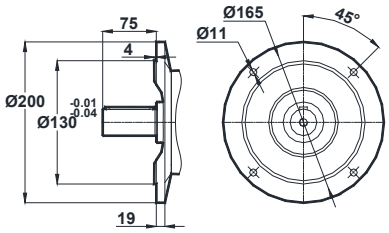

Opt. 1

*Dimension " k1" is for motors with brake.

Tapped center hole to DIN 332, sheet 2

MRF375
MRF376

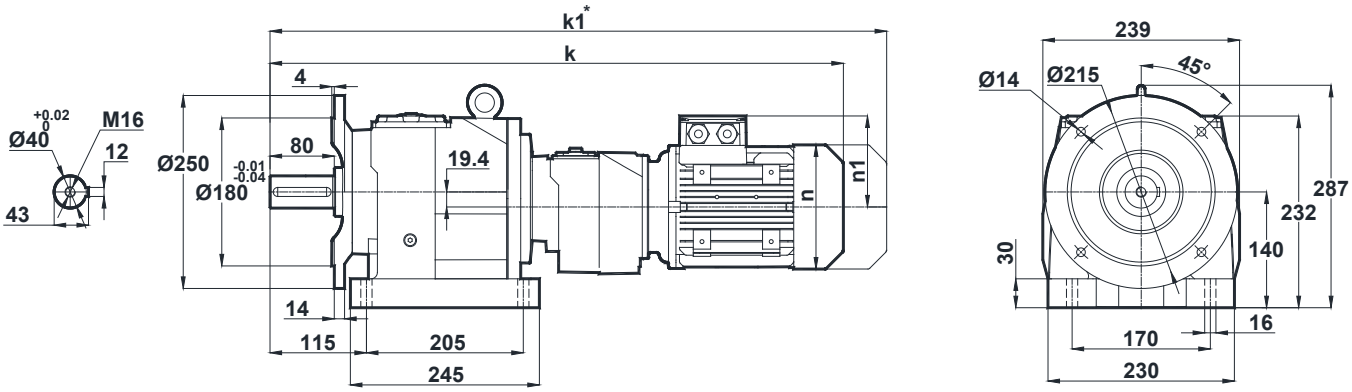

Motor Size	
	63
k	666
k1	727
n	121
n1	97

Terminal Box

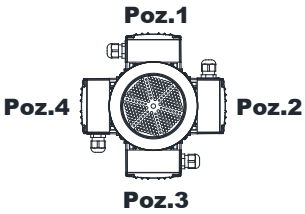

63

Optional Flange Dimensions

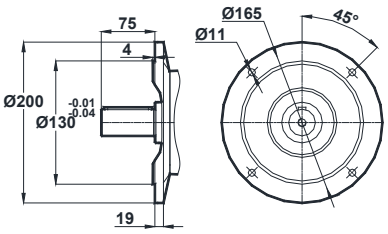

Opt. 1

*Dimension " k1" is for motors with brake.

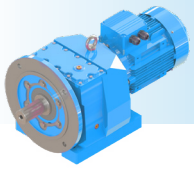

MRF - DIMENSION PAGES

Tapped center hole to DIN 332, sheet 2

MRF472
MRF473

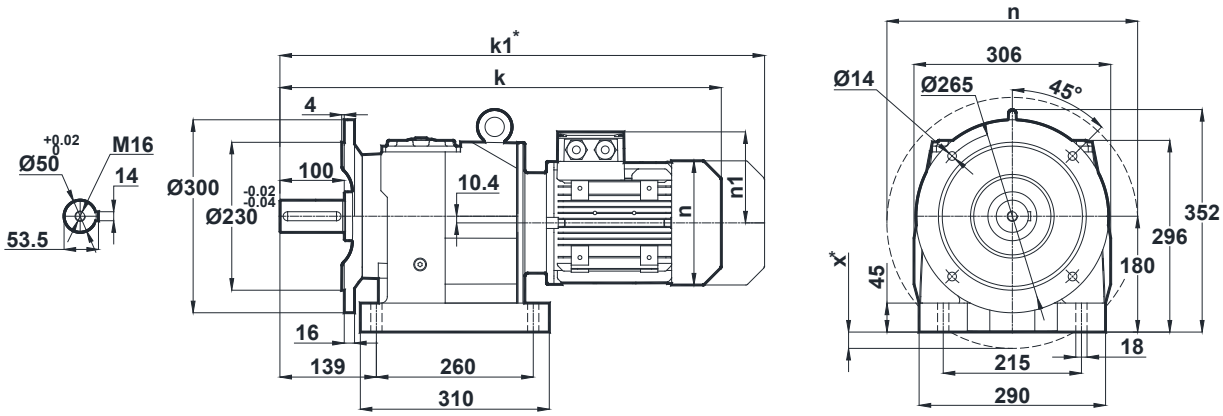

Motor Size											
	80	90S	90L	100L	112M	132S	132M	160M	160L	180M	180L
k	610.5	649.5	649.5	694.5	718.5	803.5	803.5	899.5	899.5	971.5	971.5
k1	703.5	753	753	803	823	933.5	933.5	1047.5	1047.5	1130	1130
n	155	176	176	193	215	257	257	315	315	347	347
n1	121	132	132	147	158	179	179	219	219	234	234
x	-	-	-	-	-	-	-	-	-	3	3

Terminal Box

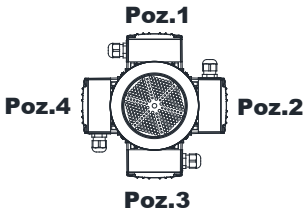

80-90-100-112-132-160-180

Optional Flange Dimensions

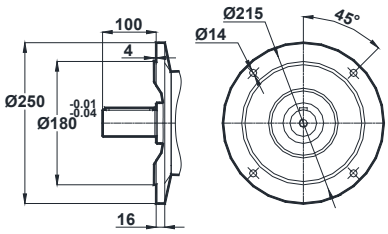

Opt. 1

*Dimension " k1" is for motors with brake.
x: If Motor is lower than foot mounting plane

Tapped center hole to DIN 332, sheet 2

MRF474

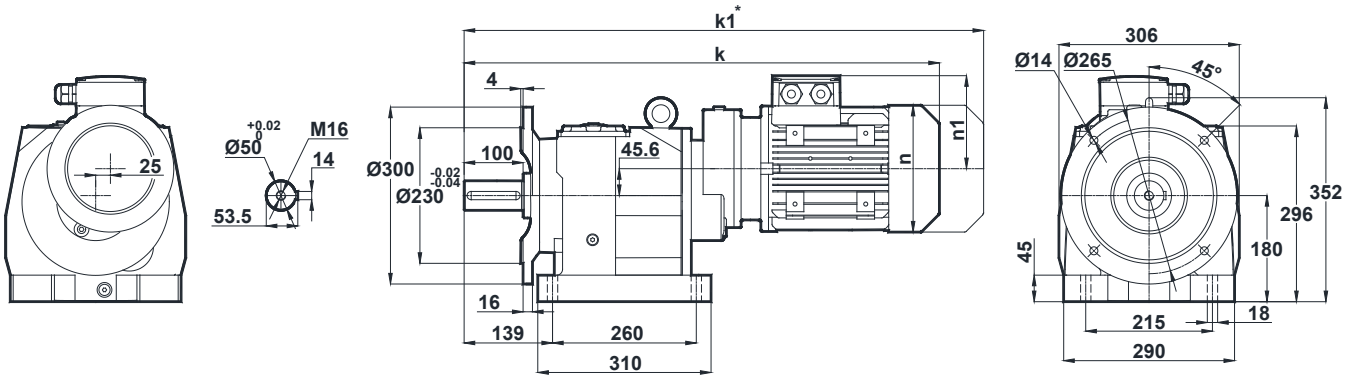

Motor Size		
	71	80
k	670	704
k1	761	797
n	137	155
n1	112	121

Terminal Box

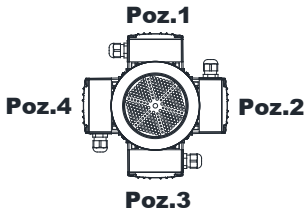

71-80

Optional Flange Dimensions

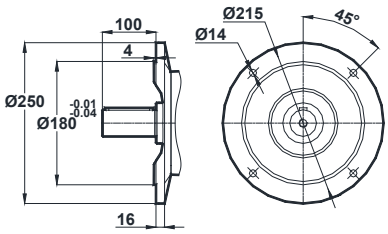

Opt. 1

*Dimension " k1" is for motors with brake.

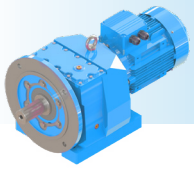

MRF - DIMENSION PAGES

Tapped center hole to DIN 332, sheet 2

MRF475
MRF476

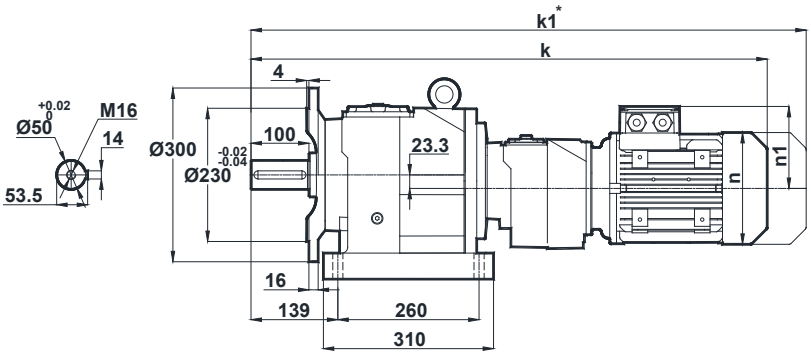

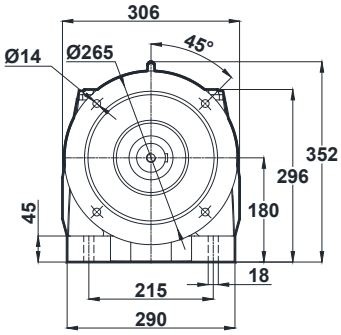

Motor Size		
	63	71
k	773	800
k1	834	891
n	121	137
n1	97	112

Terminal Box

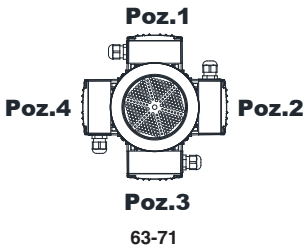

Optional Flange Dimensions

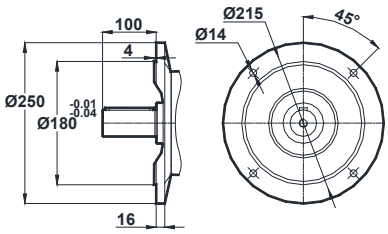

Opt. 1

*Dimension " k1" is for motors with brake.

DANA BREVINI®
Motion Systems

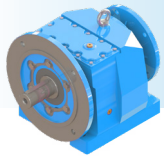

MNF - DIMENSION PAGES

Tapped center hole to DIN 332, sheet 2

MNF002-A..
MNF003-A..

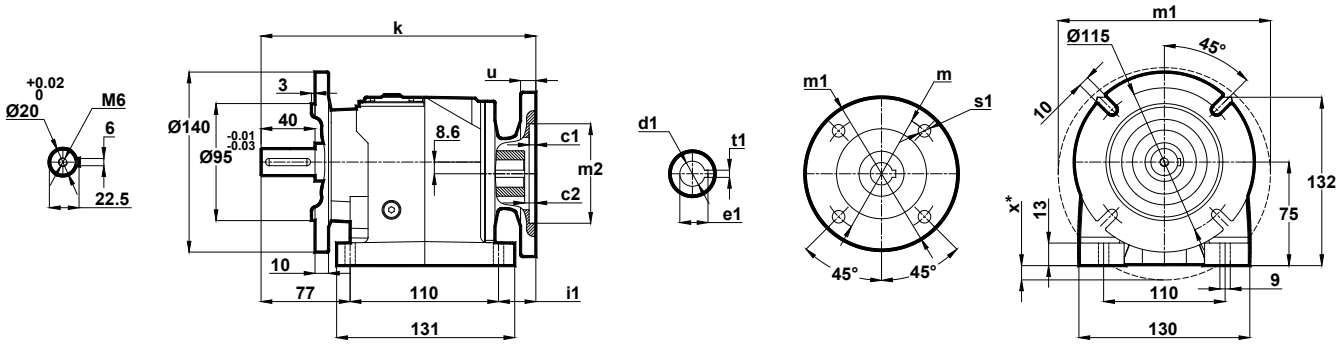

IEC	c1	c2	s1	m	m1	m2	i1	u	k	d1	t1	e1	x
63/B5	3.5	5	10	115	140	95	28	10	214	11	4	12.8	4
71/B5	4	4.5	11	130	160	110	29.5	12	215.5	14	5	16.3	14
80/B5	4	5	12	165	200	130	44.5	12	230.5	19	6	21.8	34
90/B5	4	5	12	165	200	130	44.5	12	230.5	24	8	27.3	34

Optional Flange Dimensions

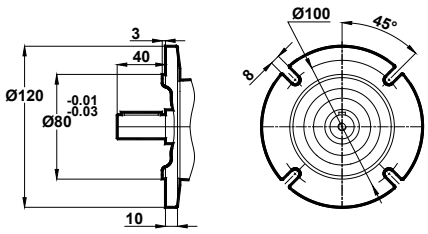

Opt. 1

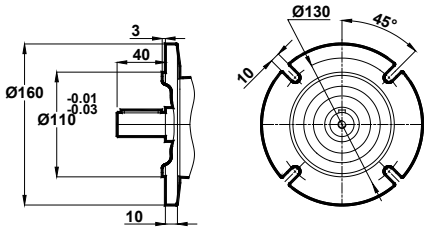

Opt. 2

x: If Motor is lower then foot mounting plane

Tapped center hole to DIN 332, sheet 2

MNF002-B..
MNF003-B..

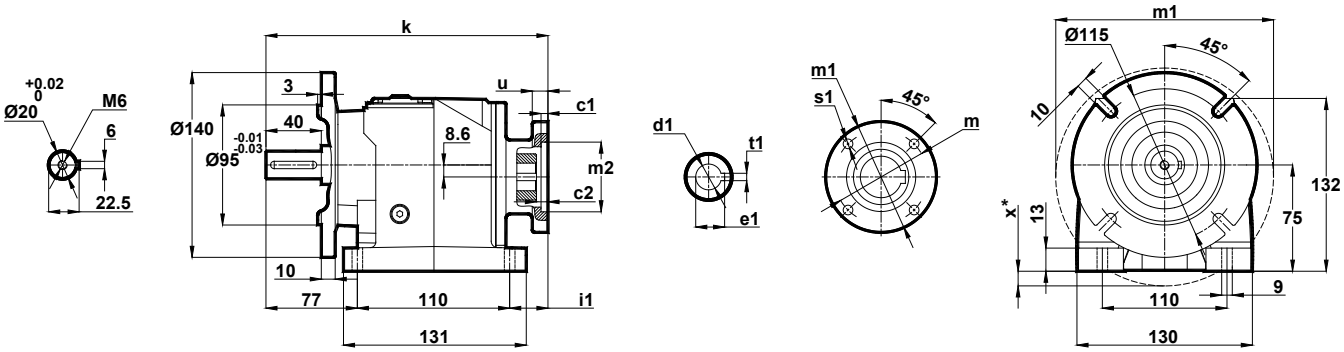

IEC	c1	c2	s1	m	m1	m2	i1	u	k	d1	t1	e1	x
63/B14	2.5	5	5.5	75	90	60	28	10	214	11	4	12.8	-
71/B14	3	4.5	7	85	105	70	29.5	10	215.5	14	5	16.3	-
80/B14	4	5	7	100	120	80	44.5	12	230.5	19	6	21.8	-
90/B14	4	5	9	115	140	95	44.5	12	230.5	24	8	27.3	4

Optional Flange Dimensions

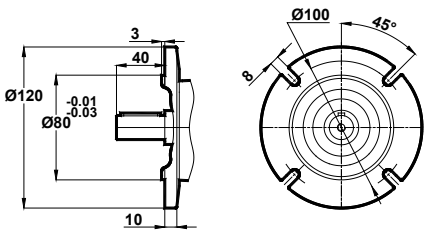

Opt. 1

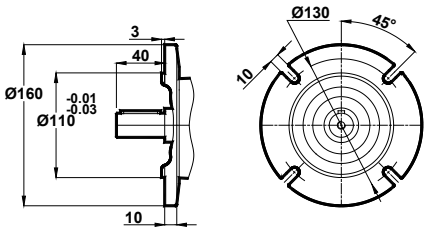

Opt. 2

x: If Motor is lower then foot mounting plane

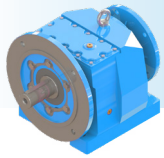

MNF - DIMENSION PAGES

Tapped center hole to DIN 332, sheet 2

MNF102-A..
MNF103-A..

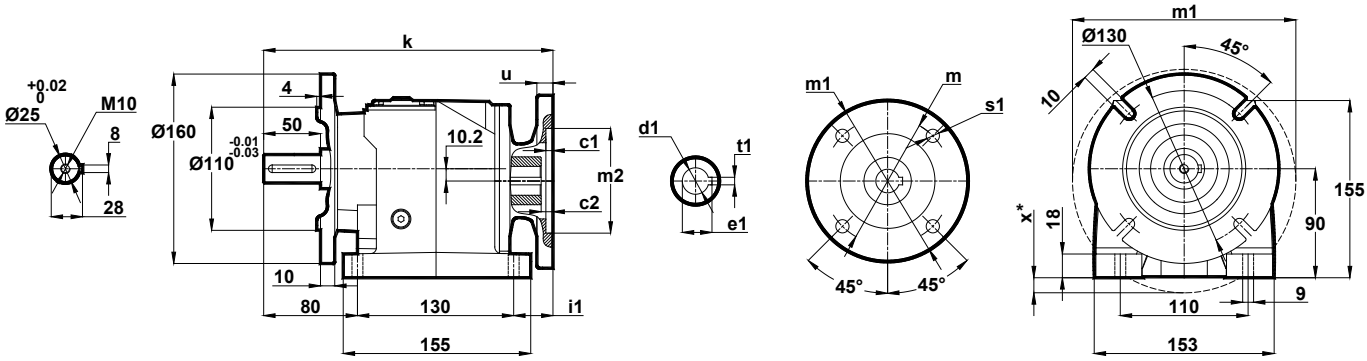

IEC	c1	c2	s1	m	m1	m2	i1	u	k	d1	t1	e1	x
63/B5	3.5	5	10	115	140	95	28.5	12	241	11	4	12.8	-
71/B5	4	4.5	12	130	160	110	28.5	12	242.5	14	5	16.3	0.5
80/B5	4	5	12	165	200	130	43.5	12	257.5	19	6	21.8	20
90/B5	4	5	12	165	200	130	43.5	12	257.5	24	8	27.3	20

Optional Flange Dimensions

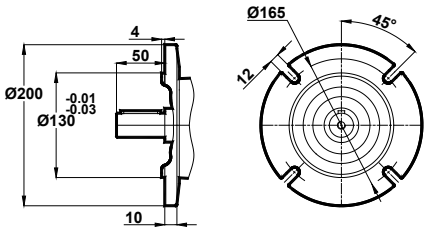

Opt. 1

x: If Motor is lower then foot mounting plane

Tapped center hole to DIN 332, sheet 2

MNF102-B..
MNF103-B..

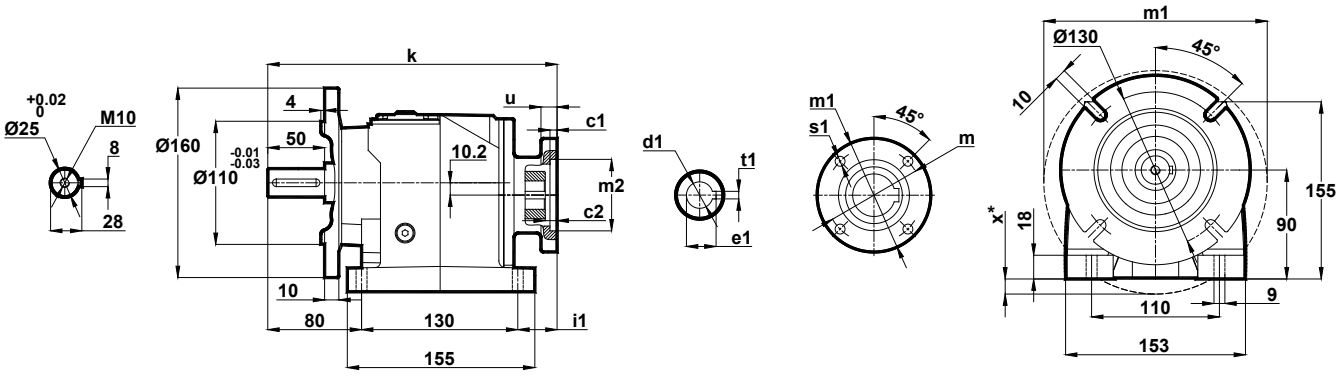

IEC	c1	c2	s1	m	m1	m2	i1	u	k	d1	t1	e1	x
63/B14	2.5	5	5.5	75	90	60	28.5	10	241	11	4	12.8	-
71/B14	3	4.5	7	85	105	70	28.5	10	242.5	14	5	16.3	-
80/B14	4	4.7	7	100	120	80	43.5	12	257.5	19	6	21.8	-
90/B14	4	4.7	9	115	140	95	43.5	12	257.5	24	8	27.3	-

Optional Flange Dimensions

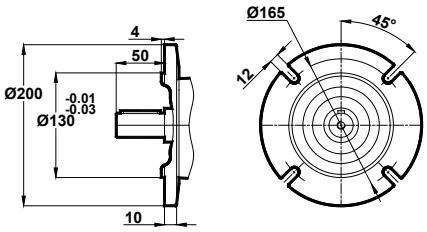

Opt. 1

x: If Motor is lower then foot mounting plane

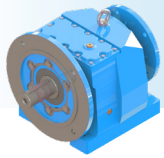

MNF - DIMENSION PAGES

Tapped center hole to DIN 332, sheet 2

MNF172-A..
MNF173-A..

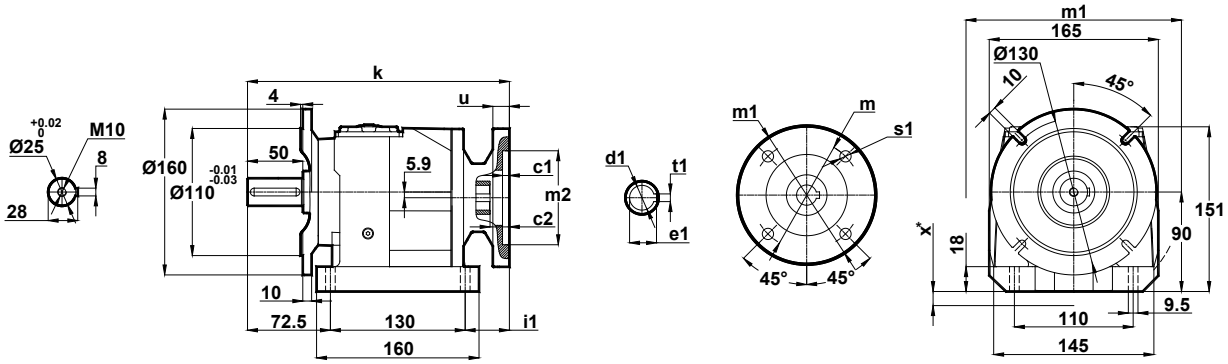

IEC	c1	c2	s1	m	m1	m2	i1	u	k	d1	t1	e1	x
63/B5	3.5	5	10	115	140	95	38.5	10	241	11	4	12.8	-
71/B5	4	4.5	11	130	160	110	40	12	242.5	14	5	16.3	-
80/B5	4	5	12	165	200	130	55	12	257.5	19	6	21.8	16
90/B5	4	5	12	165	200	130	55	12	257.5	24	8	27.3	16
100/B5	4.5	5	15	215	250	180	66	12	268.5	28	8	31.3	41
112/B5	4.5	5	15	215	250	180	66	12	268.5	28	8	31.3	41

Optional Flange Dimensions

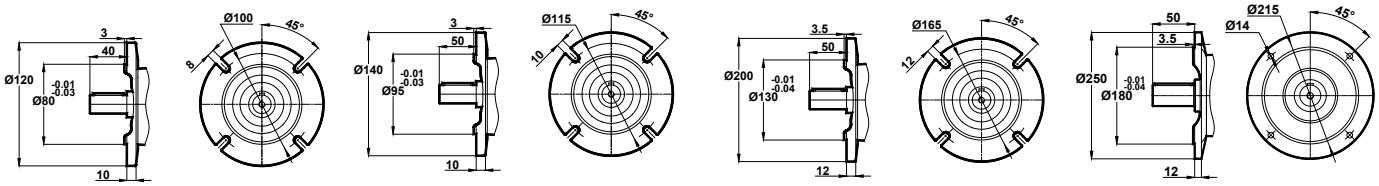

Opt. 1 **Opt. 2** **Opt. 3** **Opt. 4**

x: If Motor is lower then foot mounting plane

Tapped center hole to DIN 332, sheet 2

MNF172-B..
MNF173-B..

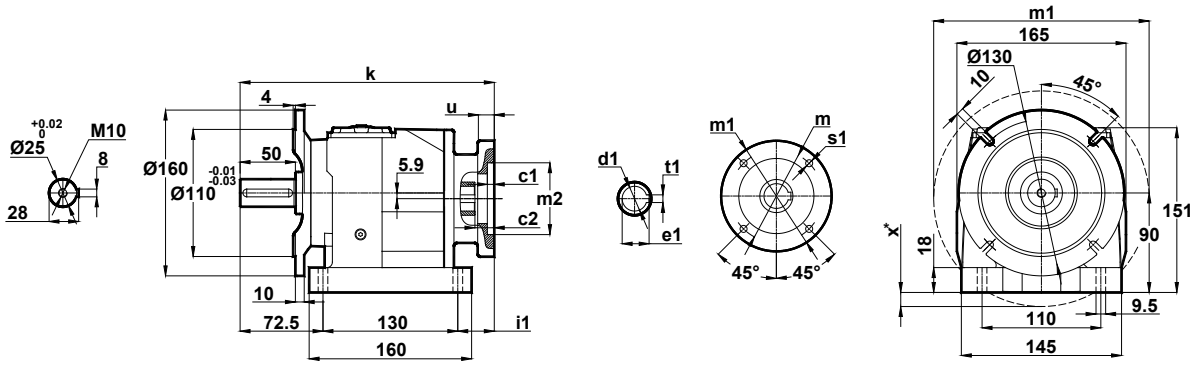

IEC	c1	c2	s1	m	m1	m2	i1	u	k	d1	t1	e1	x
71/B14	3	4.5	7	85	105	70	40	10	242.5	14	5	16.3	-
80/B14	4	5	7	100	120	80	55	12	257.5	19	6	21.8	-
90/B14	4	5	9	115	140	95	55	12	257.5	24	8	27.3	-
100/B14	4	5.5	9	130	160	110	66	12	268.5	28	8	31.3	-
112/B14	4	5.5	9	130	160	110	66	12	268.5	28	8	31.3	-

Optional Flange Dimensions

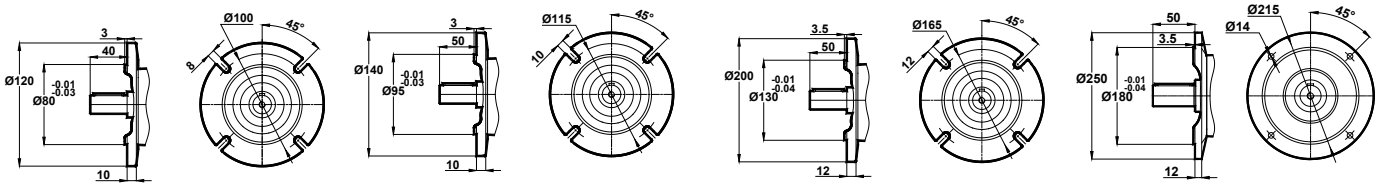

Opt. 1 **Opt. 2** **Opt. 3** **Opt. 4**

x: If Motor is lower then foot mounting plane

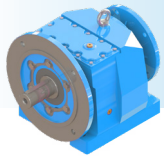

MNF - DIMENSION PAGES

Tapped center hole to DIN 332, sheet 2

MNF202-A..
MNF203-A..

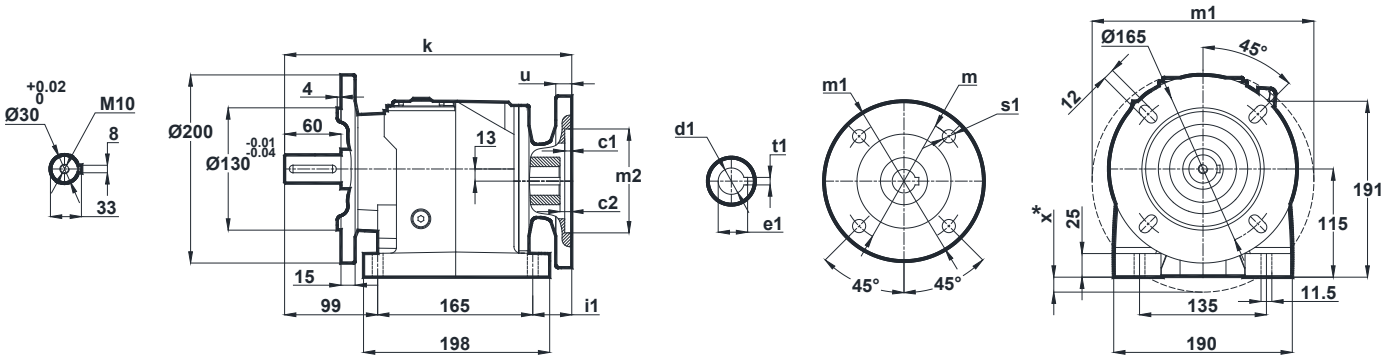

IEC	c1	c2	s1	m	m1	m2	i1	u	k	d1	t1	e1	x
63/B5	4	5	9	115	140	95	58.5	12	322.5	11	4	12.8	-
71/B5	4	8.5	11	130	160	110	29.5	12	293.5	14	5	163	-
80/B5	4	5	12	165	200	130	58.5	12	322.5	19	6	21.8	-
90/B5	4	5	12	165	200	130	58.5	12	322.5	24	8	27.3	-
100/B5	4.5	5.5	15	215	250	180	51.5	12	315.5	28	8	31.3	23
112/B5	4.5	5.5	15	215	250	180	51.5	12	315.5	28	8	31.3	23

Optional Flange Dimensions

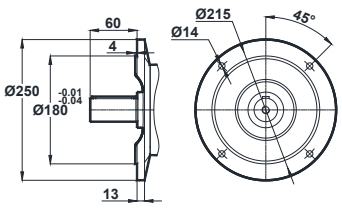

Opt. 1

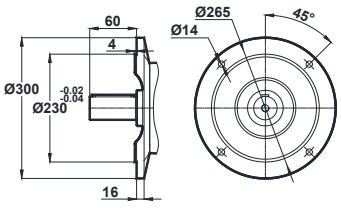

Opt. 2

x: If Motor is lower then foot mounting plane

Tapped center hole to DIN 332, sheet 2

MNF202-B..
MNF203-B..

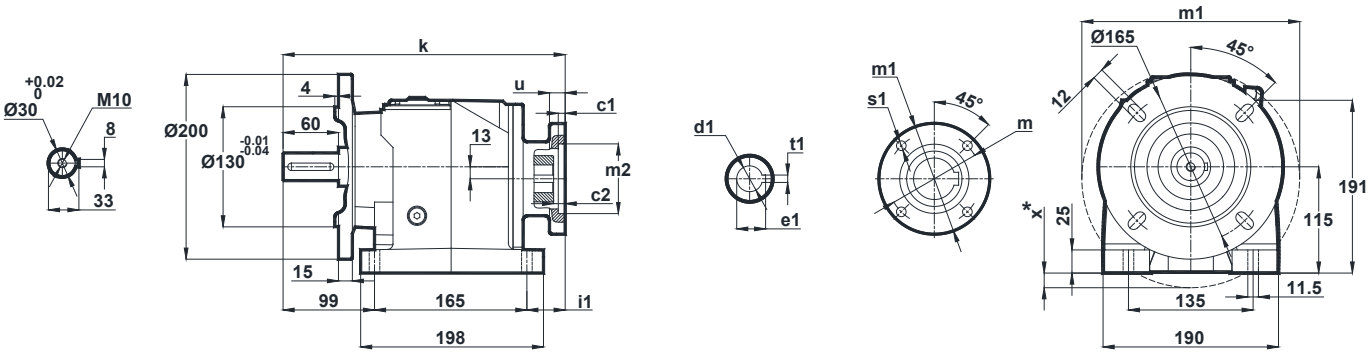

IEC	c1	c2	s1	m	m1	m2	i1	u	k	d1	t1	e1	x
71/B14	3	8.5	7	85	105	70	29.5	10	293.5	14	5	16.3	-
80/B14	4	5	7	100	120	80	58.5	12	322.5	19	6	21.8	-
90/B14	4	5	9	115	140	95	58.5	12	322.5	24	8	27.3	-
100/B14	4	5.5	9	130	160	110	51.5	12	315.5	28	8	31.3	-
112/B14	4	5.5	9	130	160	110	51.5	12	315.5	28	8	31.3	-

Optional Flange Dimensions

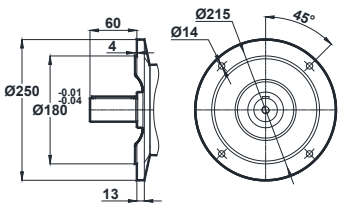

Opt. 1

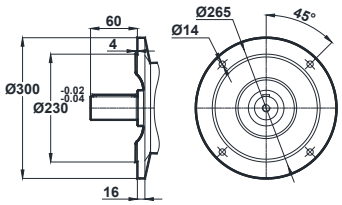

Opt. 2

x: If Motor is lower then foot mounting plane

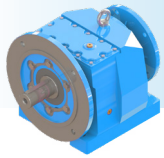

MNF - DIMENSION PAGES

Tapped center hole to DIN 332, sheet 2

MNF272-A..
MNF273-A..

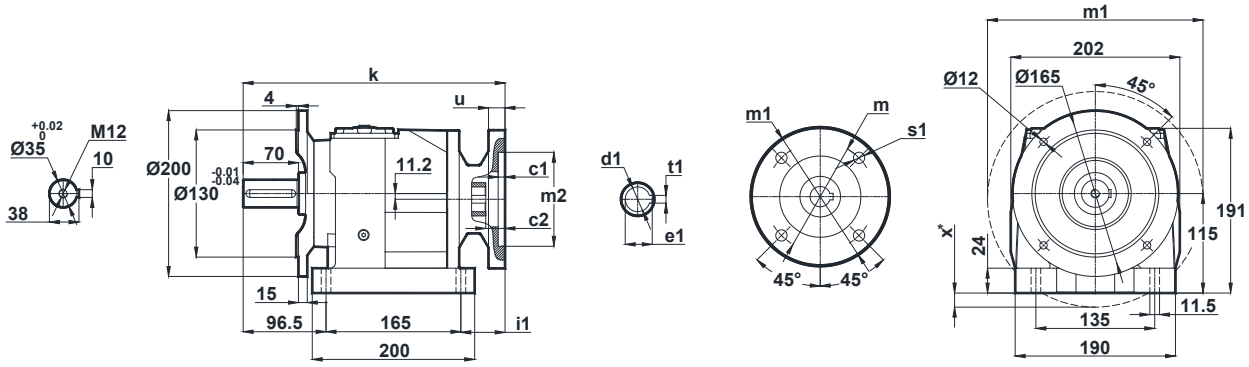

IEC	c1	c2	s1	m	m1	m2	i1	u	k	d1	t1	e1	x
63/B5	4	5	9	115	140	95	62	12	323.5	11	4	12.8	-
71/B5	4	8.5	11	130	160	110	33	12	294.5	14	5	16.3	-
80/B5	4	5	12	165	200	130	62	12	323.5	19	6	21.8	-
90/B5	4	5	12	165	200	130	62	12	323.5	24	8	27.3	-
100/B5	4.5	5.5	15	215	250	180	55	12	316.5	28	8	31.3	22
112/B5	4.5	5.5	15	215	250	180	55	12	316.5	28	8	31.3	22
132/B5	4.5	7	15	265	300	230	92	15	363.5	38	10	41.3	47

Optional Flange Dimensions

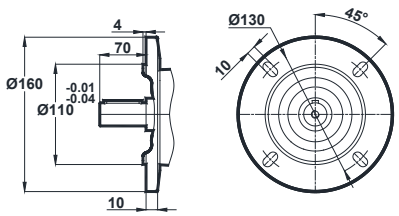

Opt. 1

x: If Motor is lower then foot mounting plane

Tapped center hole to DIN 332, sheet 2

MNF272-B..
MNF273-B..

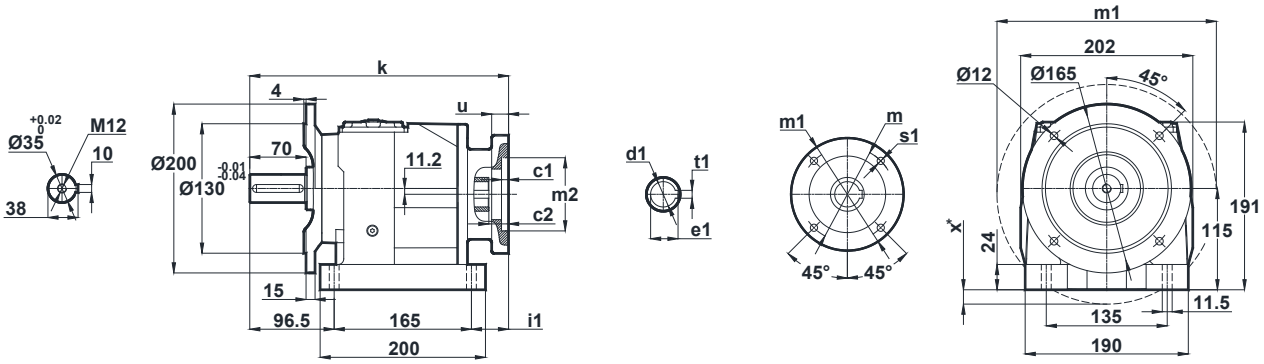

IEC	c1	c2	s1	m	m1	m2	i1	u	k	d1	t1	e1	x
71/B14	3	8.5	7	85	105	70	33	10	294.5	14	5	16.3	-
80/B14	4	5	7	100	120	80	62	12	323.5	19	6	21.8	-
90/B14	4	5	9	115	140	95	62	12	323.5	24	8	27.3	-
100/B14	4	5.5	9	130	160	110	55	12	316.5	28	8	31.3	-
112/B14	4	5.5	9	130	160	110	55	12	316.5	28	8	31.3	-
132/B14	4.5	6	11	165	200	130	92	15	363.5	35	10	41.3	-

Optional Flange Dimensions

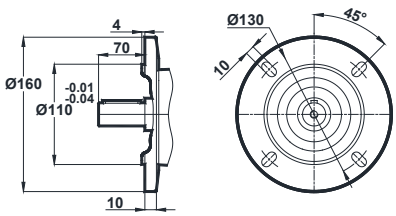

Opt. 1

x: If Motor is lower then foot mounting plane

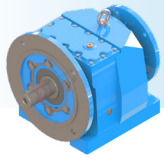

MNF - DIMENSION PAGES

Tapped center hole to DIN 332, sheet 2

MNF275-A..
MNF276-A..

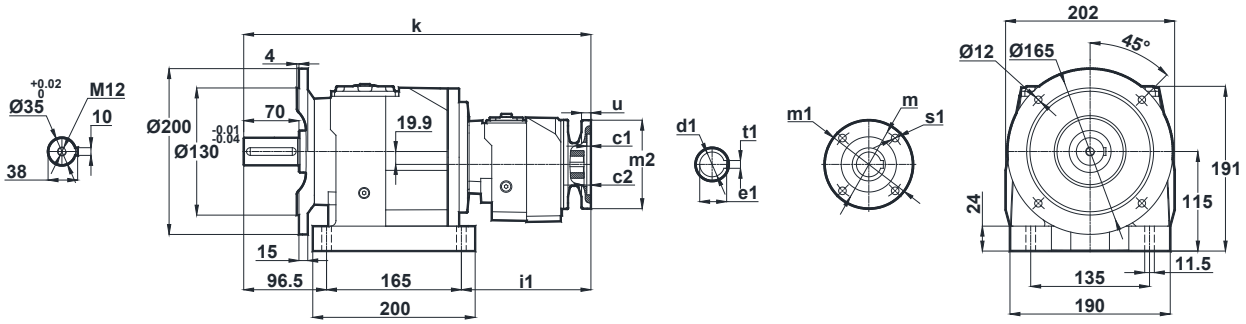

IEC	c1	c2	s1	m	m1	m2	i1	u	k	d1	t1	e1
63/B5	3.5	5	10	115	140	95	177.5	10	439	11	4	12.8
71/B5	4	4.5	11	130	160	110	179	12	440.5	14	5	16.3

Optional Flange Dimensions

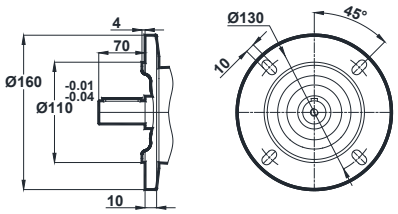

Opt. 1

Tapped center hole to DIN 332, sheet 2

MNF275-B..
MNF276-B..

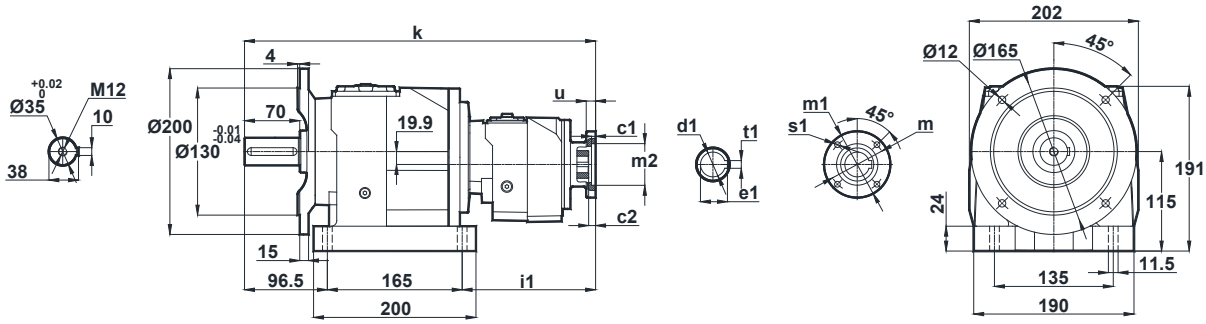

IEC	c1	c2	s1	m	m1	m2	i1	u	k	d1	t1	e1
63/B14	2.5	5	5.5	75	90	60	177.5	10	439	11	4	12.8
71/B14	3	4.5	7	85	105	70	179	10	440.5	14	5	16.3

Optional Flange Dimensions

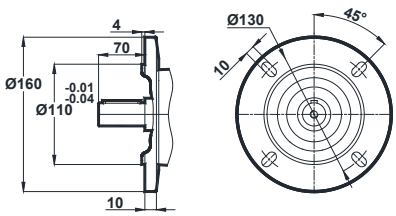

Opt. 1

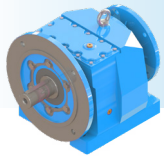

MNF - DIMENSION PAGES

Tapped center hole to DIN 332, sheet 2

MNF282-A..
MNF283-A..

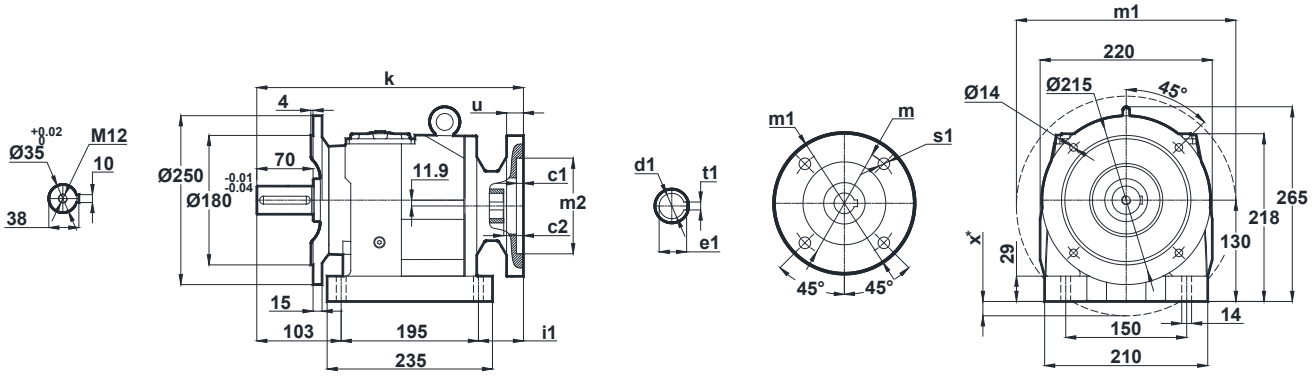

IEC	c1	c2	s1	m	m1	m2	i1	u	k	d1	t1	e1	x
71/B5	4	9	11	130	160	110	45	12	343	14	5	16.3	-
80/B5	4	9	12	165	200	130	45	12	343	19	6	21.8	-
90/B5	4	9	12	165	200	130	45	12	343	24	8	27.3	-
100/B5	4.5	9	15	215	250	180	52	15	360	28	8	31.3	7
112/B5	4.5	9	15	215	250	180	52	15	360	28	8	31.3	7
132/B5	4.5	7	15	265	300	230	82	15	380	38	10	41.3	32

Optional Flange Dimensions

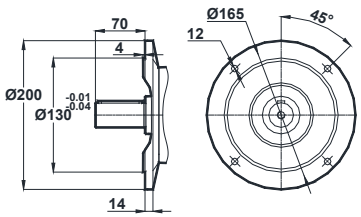

Opt. 1

x: If Motor is lower then foot mounting plane

Tapped center hole to DIN 332, sheet 2

MNF282-B..
MNF283-B..

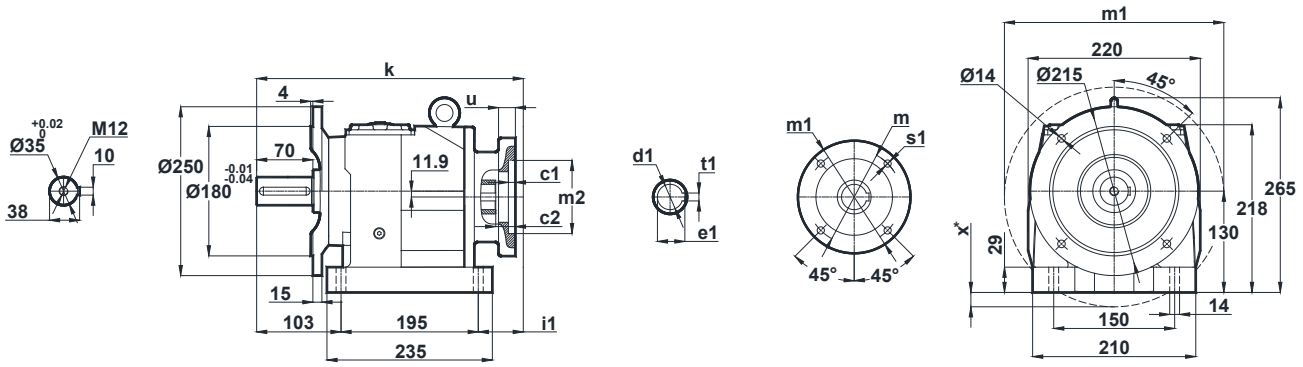

IEC	c1	c2	s1	m	m1	m2	i1	u	k	d1	t1	e1	x
80/B14	4	9	7	100	120	80	45	12	343	19	6	21.8	-
90/B14	4	9	9	115	140	95	45	12	343	24	8	26.3	-
100/B14	4	9	9	130	160	110	52	15	360	28	8	31.3	-
112/B14	4	9	9	130	160	110	52	15	360	28	8	31.3	-
132/B14	4.5	7	11	165	200	130	82	15	380	38	10	41.3	-

Optional Flange Dimensions

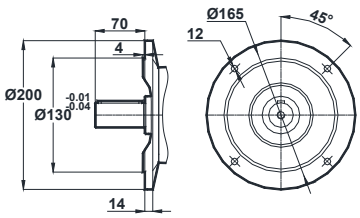

Opt. 1

x: If Motor is lower then foot mounting plane

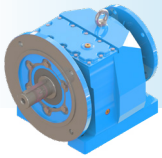

MNF - DIMENSION PAGES

Tapped center hole to DIN 332, sheet 2

MNF284-A..
MNF284-B..

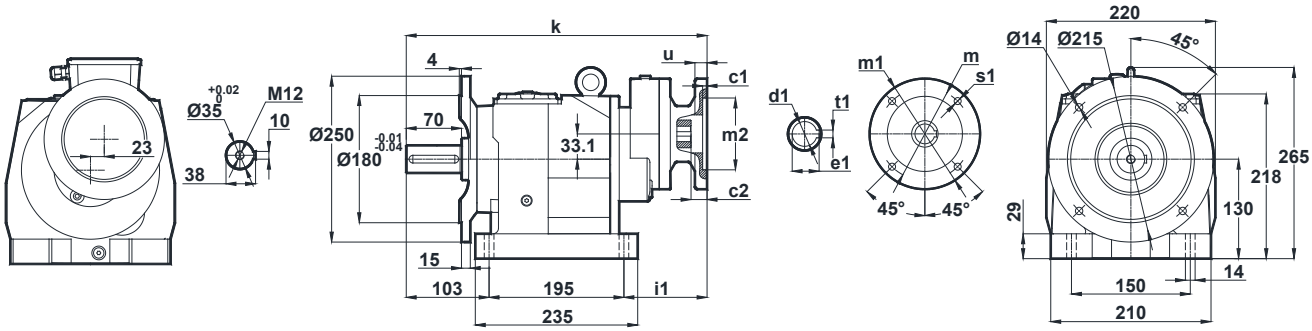

IEC	c1	c2	s1	m	m1	m2	i1	u	k	d1	t1	e1
63/B5	3.5	5	10	115	140	95	122	10	420	11	4	12.8
71/B5	4	4.5	11	130	160	110	93	12	391	14	5	16.3
71/B14	3	4.5	7	85	105	70	93	10	391	14	5	16.3

Optional Flange Dimensions

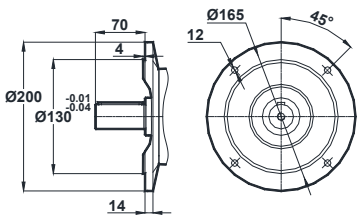

Opt. 1

Tapped center hole to DIN 332, sheet 2

MNF285-A.. / B..
MNF286-A.. / B..

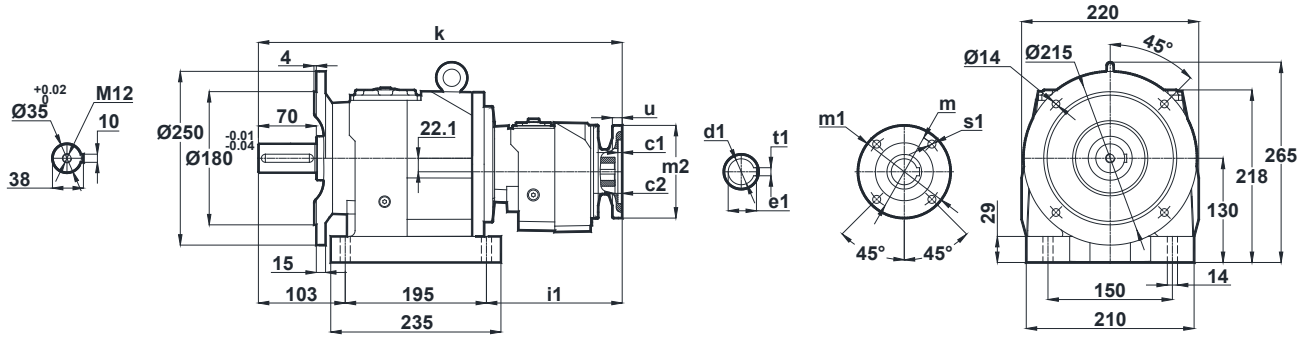

IEC	c1	c2	s1	m	m1	m2	i1	u	k	d1	t1	e1
63/B5	3.5	5	10	115	140	95	188	12	488	11	4	12.8
63/B14	2.5	5	5.5	75	90	60	188	10	488	11	4	12.8

Optional Flange Dimensions

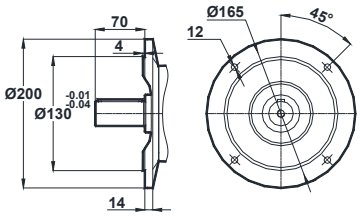

Opt. 1

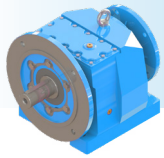

MNF - DIMENSION PAGES

Tapped center hole to DIN 332, sheet 2

MNF372-A..
MNF373-A..

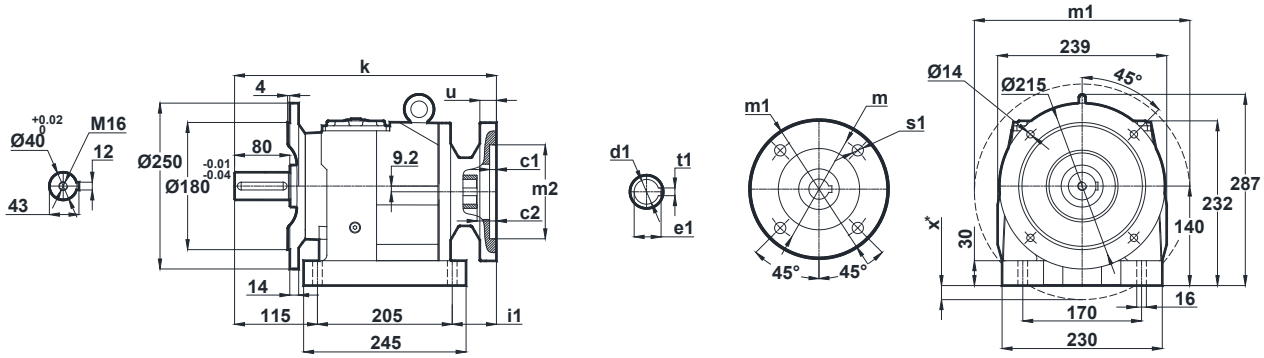

IEC	c1	c2	s1	m	m1	m2	i1	u	k	d1	t1	e1	x
71/B5	4	9	11	130	160	110	43.5	12	364	14	5	16.3	-
80/B5	4	9	12	165	200	130	43.5	12	364	19	6	21.8	-
90/B5	4	9	12	165	200	130	43.5	12	364	24	8	27.3	-
100/B5	4.5	9	15	215	250	180	60.5	15	381	28	8	31.3	-
112/B5	4.5	9	15	215	250	180	60.5	15	381	28	8	31.3	-
132/B5	4.5	7	15	265	300	230	80.5	15	401	38	10	41.3	20

Optional Flange Dimensions

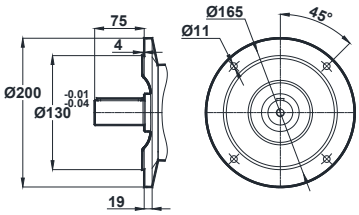

Opt. 1

x: If Motor is lower then foot mounting plane

Tapped center hole to DIN 332, sheet 2

MNF372-B..
MNF373-B..

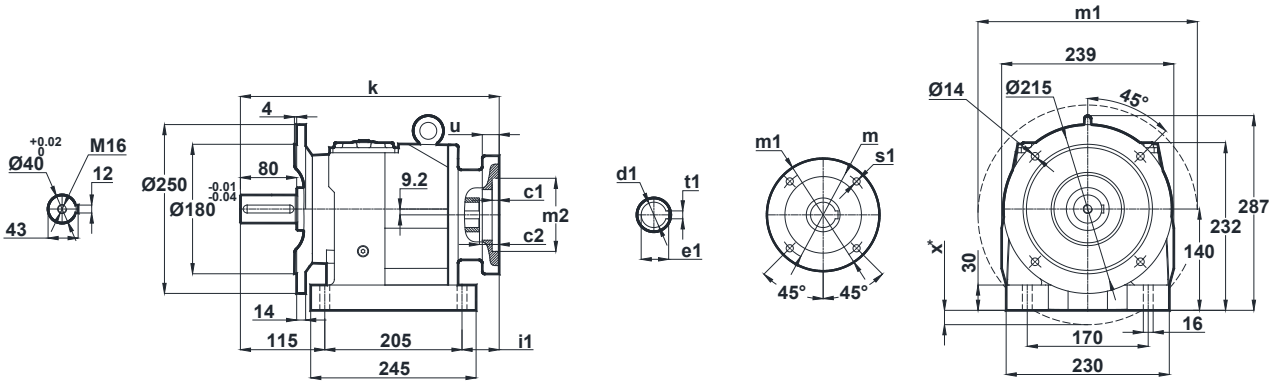

IEC	c1	c2	s1	m	m1	m2	i1	u	k	d1	t1	e1	x
80/B14	4	9	7	100	120	80	43.5	12	364	19	6	21.8	-
90/B14	4	9	9	115	140	95	43.5	12	364	24	8	26.3	-
100/B14	4	9	9	130	160	110	60.5	15	381	28	8	31.3	-
112/B14	4	9	9	130	160	110	60.5	15	381	28	8	31.3	-
132/B14	4.5	9	11	165	200	130	80.5	15	401	38	10	41.3	-

Optional Flange Dimensions

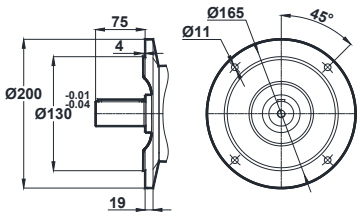

Opt. 1

x: If Motor is lower then foot mounting plane

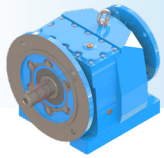

MNF - DIMENSION PAGES

Tapped center hole to DIN 332, sheet 2

MNF374-A..
MNF374-B..

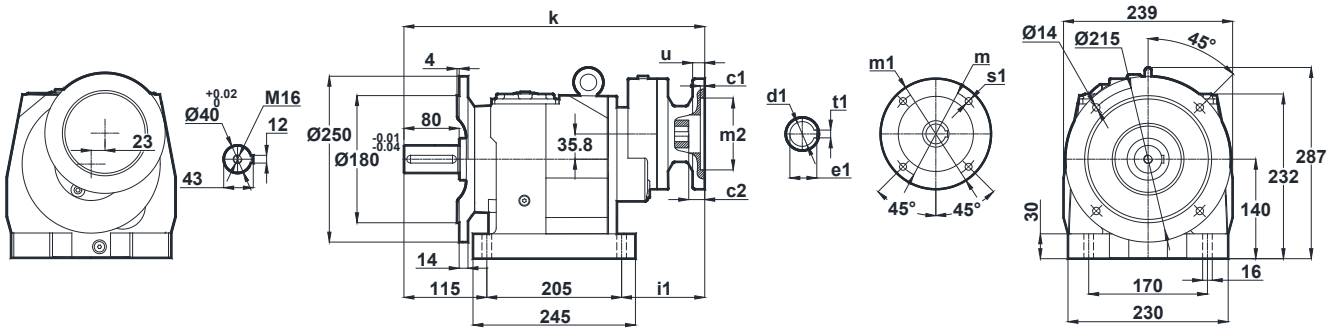

IEC	c1	c2	s1	m	m1	m2	i1	u	k	d1	t1	e1
63/B5	4	5	9	115	140	95	120.5	12	441	11	4	12.8
71/B5	4	8.5	11	130	160	110	91.5	12	412	14	5	16.3
80/B5	4	5	12	165	200	130	120.5	12	441	19	6	21.8
71/B14	3	8.5	7	85	105	70	91.5	10	412	14	5	16.3
80/B14	4	5	7	100	120	80	120.5	12	441	19	6	21.8

Optional Flange Dimensions

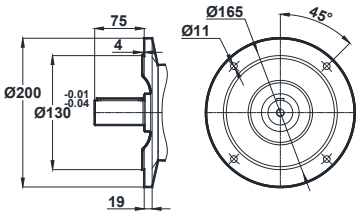

Opt. 1

Tapped center hole to DIN 332, sheet 2

MNF375-A.. / B..
MNF376-A.. / B..

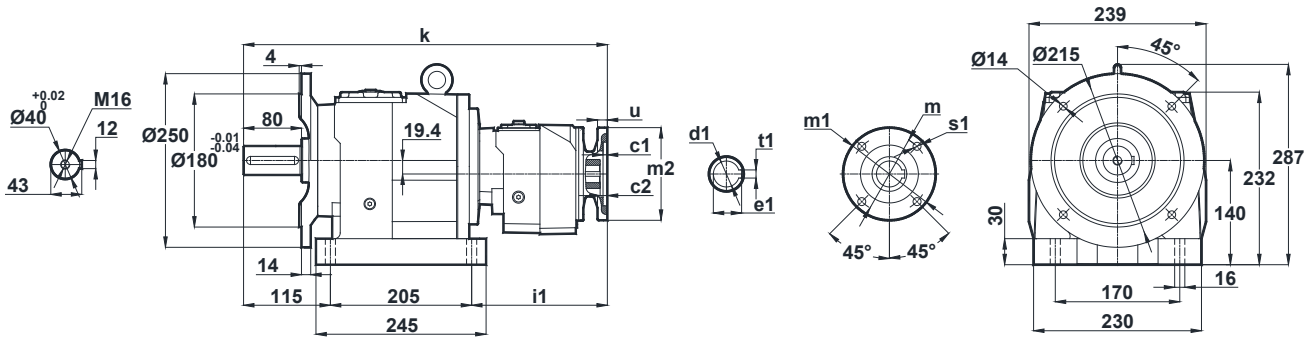

IEC	c1	c2	s1	m	m1	m2	i1	u	k	d1	t1	e1
63/B5	3.5	5	10	115	140	95	186.5	10	509	11	4	12.8
63/B14	2.5	5	5.5	75	90	60	186.5	10	509	11	4	12.8

Optional Flange Dimensions

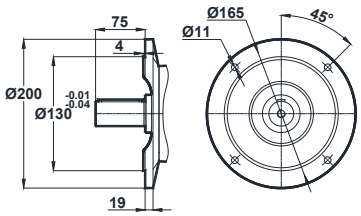

Opt. 1

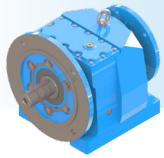

MNF - DIMENSION PAGES

Tapped center hole to DIN 332, sheet 2

MNF472-A..
MNF473-A..

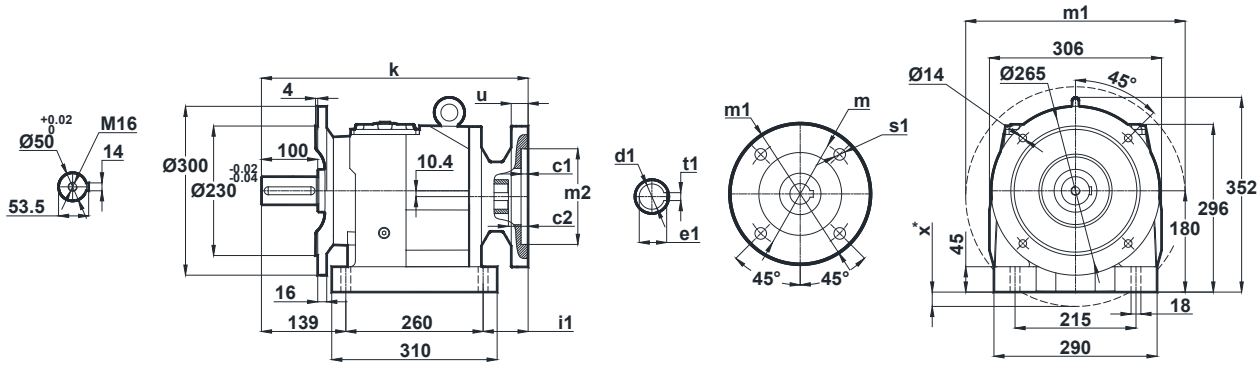

IEC	c1	c2	s1	m	m1	m2	i1	u	k	d1	t1	e1	x
80/B5	4	5	12	165	200	130	27.5	12	426.5	19	6	21.8	-
90/B5	4	5	12	165	200	130	27.5	12	426.5	24	8	27.3	-
100/B5	4.5	9	15	215	250	180	46	15	445	28	8	31.3	-
112/B5	4.5	9	15	215	250	180	46	15	445	28	8	31.3	-
132/B5	4.5	6	15	265	300	230	64.5	15	463.5	38	10	41.3	-
160/B5	5.5	10	19	300	350	250	144	20	543	42	12	45.3	6
180/B5	5.5	10	19	300	350	250	144	20	543	48	14	51.8	6

Optional Flange Dimensions

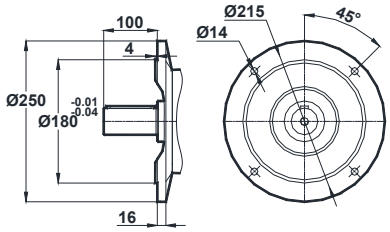

Opt. 1

x: If Motor is lower then foot mounting plane

Tapped center hole to DIN 332, sheet 2

MNF472-B..
MNF473-B..

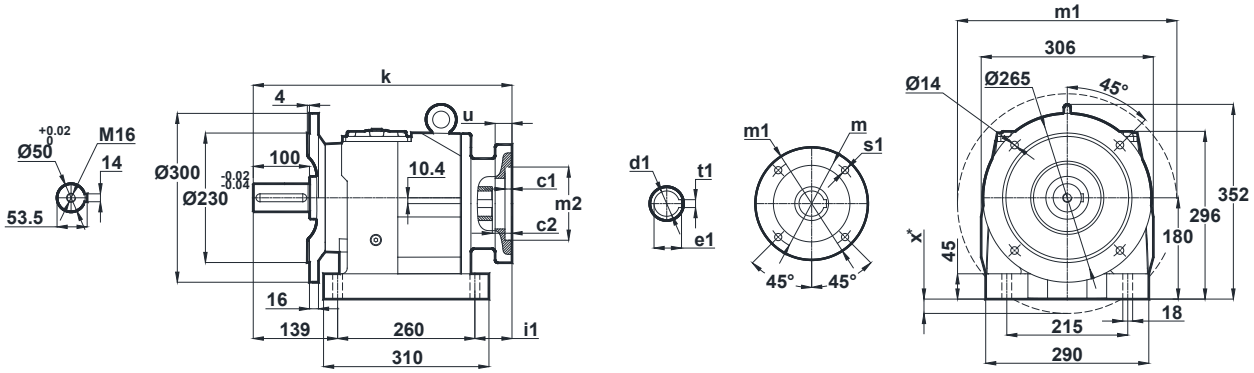

IEC	c1	c2	s1	m	m1	m2	i1	u	k	d1	t1	e1	x
90/B14	4	5	9	115	140	95	27.5	12	426.5	24	8	27.3	-
100/B14	4	9	9	130	160	110	46	15	445	28	8	31.3	-
112/B14	4	9	9	130	160	110	46	15	445	28	8	31.3	-
132/B14	4.5	6	11	165	200	130	64.5	15	463.5	38	10	41.3	-

Optional Flange Dimensions

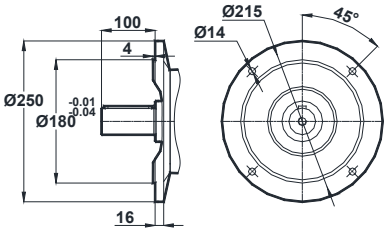

Opt. 1

x: If Motor is lower then foot mounting plane

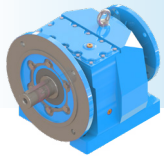

MNF - DIMENSION PAGES

Tapped center hole to DIN 332, sheet 2

MNF474-A..
MNF474-B..

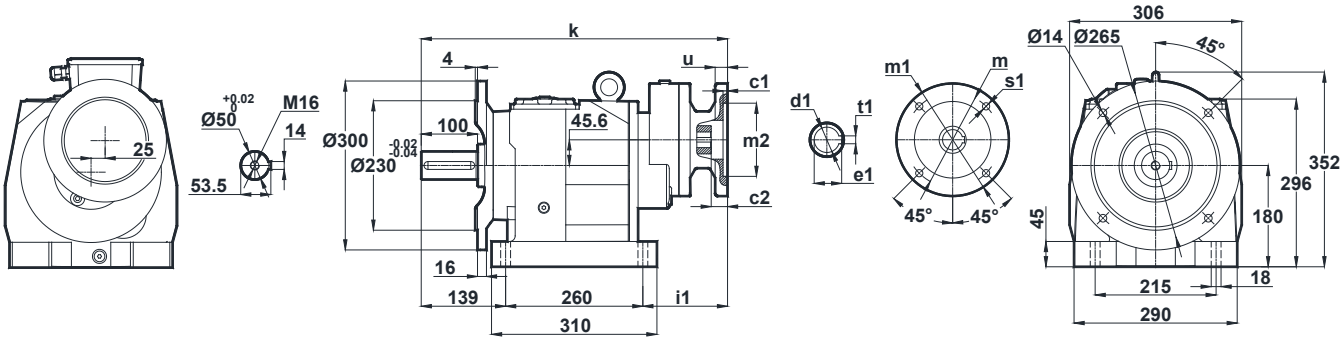

IEC	c1	c2	s1	m	m1	m2	i1	u	k	d1	t1	e1
71/B5	4	9	11	130	160	110	125.5	12	524.5	14	5	16.3
80/B5	4	9	12	165	200	130	125.5	12	524.5	19	6	21.8
80/B14	4	9	7	100	120	80	125.5	12	524.5	19	6	21.8

Optional Flange Dimensions

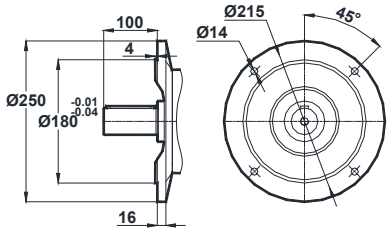

Opt. 1

Tapped center hole to DIN 332, sheet 2

MNF475-A.. / B..
MNF476-A.. / B..

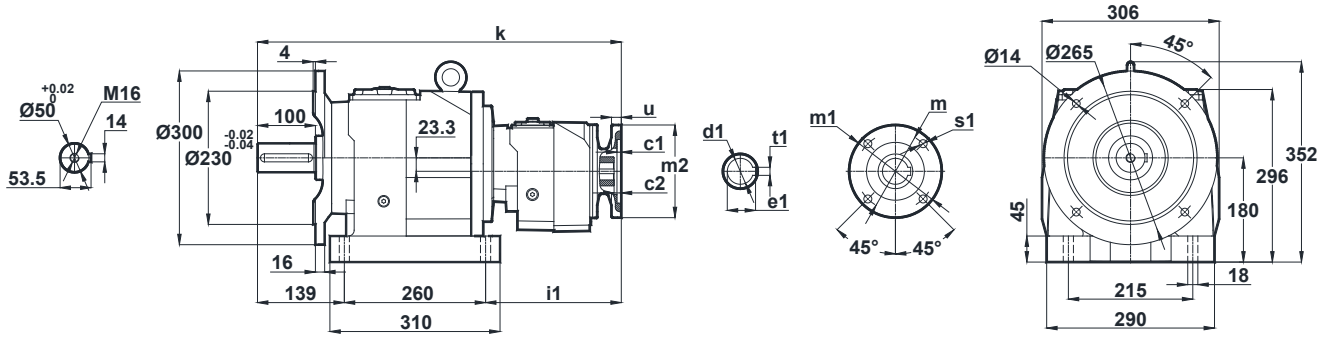

IEC	c1	c2	s1	m	m1	m2	i1	u	k	d1	t1	e1
63/B5	4	5	9	115	140	95	253.5	12	652.5	11	4	12.8
71/B5	4	8.5	11	130	160	110	224.5	12	623.5	14	5	16.3
71/B14	3	8.5	7	85	105	70	224.5	10	623.5	14	5	16.3

Optional Flange Dimensions

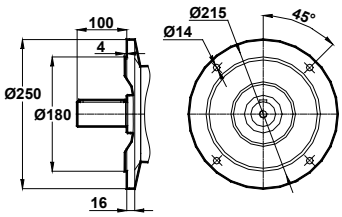

Opt. 1

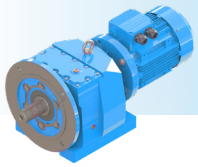

MVF - DIMENSION PAGES

Tapped center hole to DIN 332, sheet 2

MVF002
MVF003

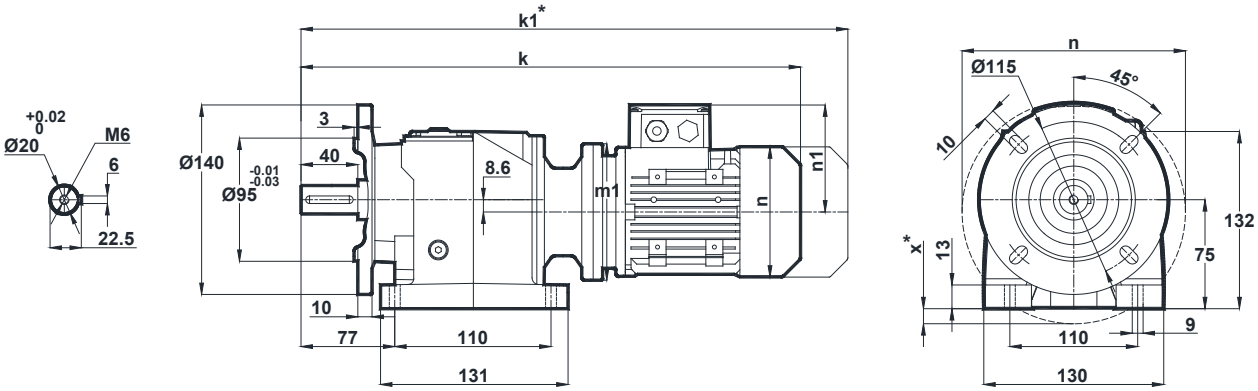

Motor Size					
IEC	63/B5 63/B14	71/B5 71/B14	80/B5 80/B14	90S/B5 90S/B14	90L/B5 90L/B14
k	407	426.5	464.5	505.5	505.5
k1	468	517.5	557.5	609	609
n / n1	121 / 97	137 / 112	155 / 121	176 / 132	176 / 132
m1 (B5)	140	160	200	200	200
m1 (B14)	90	105	120	140	140
x (B5)	4	14	34	34	34

Terminal Box

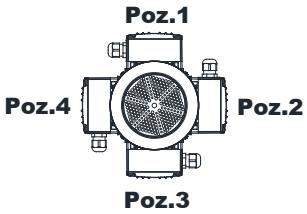

63-71-80-90

Optional Flange Dimensions

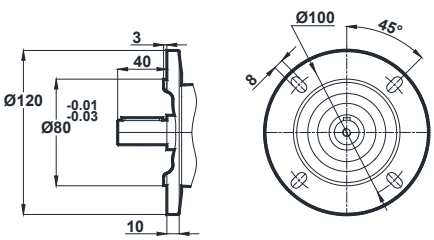

Opt. 1

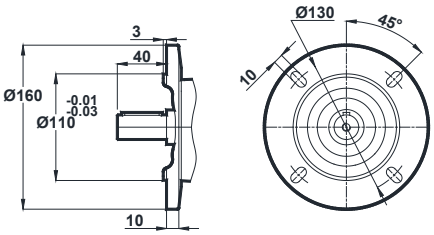

Opt. 2

* Dimension " k1" is for motors with brake.
x: If Motor is lower than foot mounting plane

Tapped center hole to DIN 332, sheet 2

MVF102
MVF103

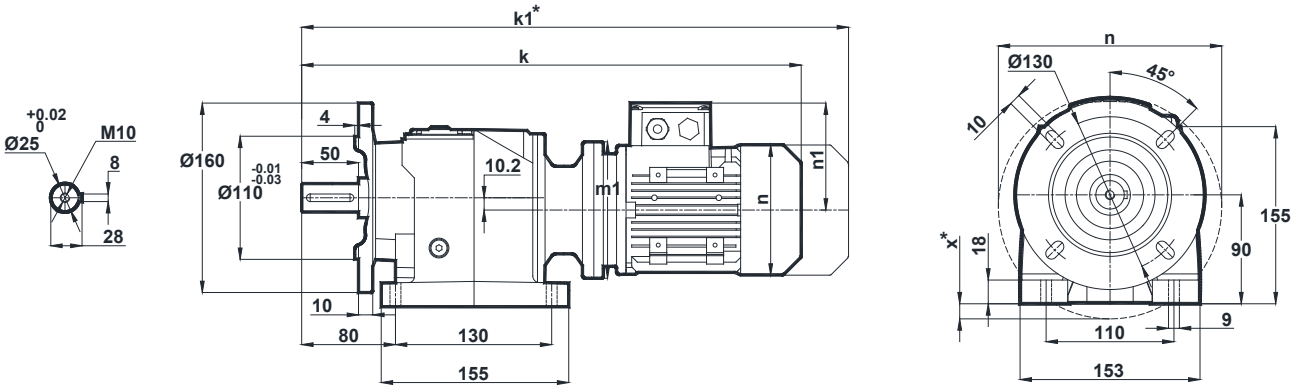

Motor Size					
IEC	63/B5 63/B14	71/B5 71/B14	80/B5 80/B14	90S/B5 90S/B14	90L/B5 90L/B14
k	431	450.5	488.5	529.5	529.5
k1	492	541.5	581.5	633	633
n / n1	121 / 97	137 / 112	155 / 121	176 / 132	176 / 132
m1 (B5)	140	160	200	200	200
m1 (B14)	90	105	120	140	140
x (B5)	-	1	21	21	21

Terminal Box

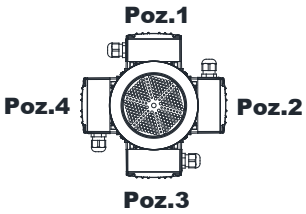

63-71-80-90

Optional Flange Dimensions

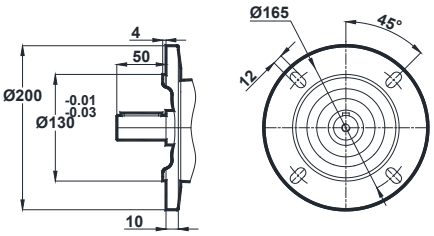

Opt. 1

* Dimension " k1" is for motors with brake.
x: If Motor is lower than foot mounting plane

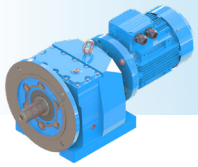

MVF - DIMENSION PAGES

Tapped center hole to DIN 332, sheet 2

MVF172
MVF173

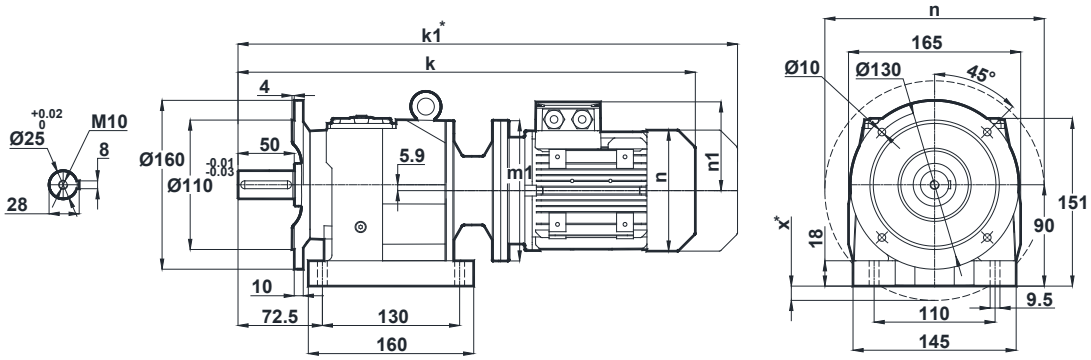

Motor Size							
IEC	63/B5 63/B14	71/B5 71/B14	80/B5 80/B14	90S/B5 90S/B14	90L/B5 90L/B14	100L/B5 100L/B14	112M/B5 112M/B14
k	434	453.5	497.5	532.5	532.5	579	599.5
k1	495	544.5	584.5	636	636	687.5	704
n / n1	121 / 97	137 / 112	155 / 121	176 / 132	176 / 132	193 / 147	215 / 158
m1 (B5)	140	160	200	200	200	250	250
m1 (B14)	-	105	120	140	140	160	160
x (B5)	-	-	16	16	16	41	41

Terminal Box

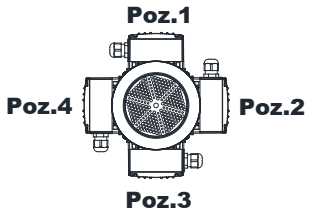

63-71-80-90-100-112

Optional Flange Dimensions

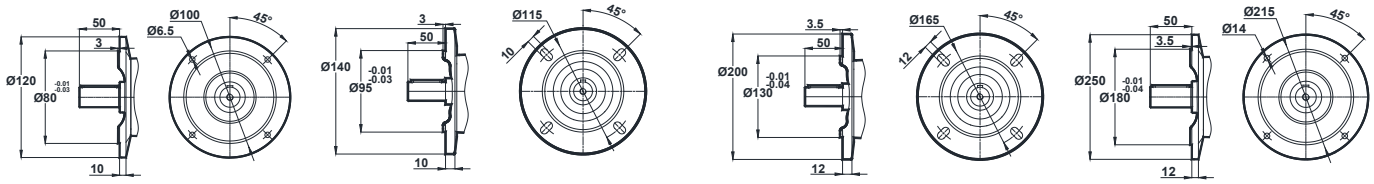

Opt. 1 **Opt. 2** **Opt. 3** **Opt. 4**

* Dimension " k1" is for motors with brake.
x: If Motor is lower than foot mounting plane

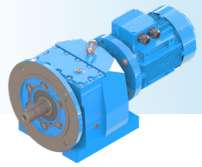

Tapped center hole to DIN 332, sheet 2

MVF202
MVF203

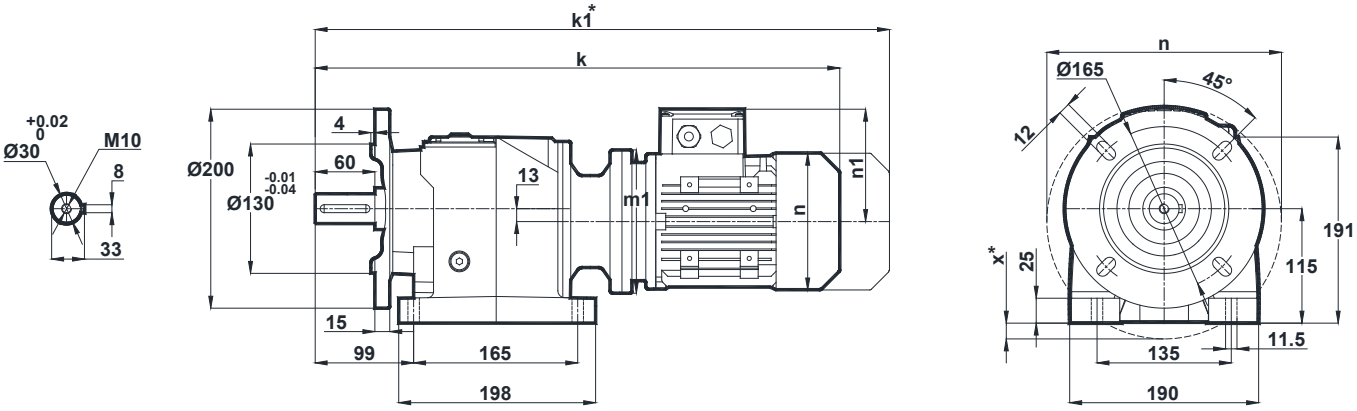

Motor Size							
IEC	63/B5	71/B5 71/B14	80/B5 80/B14	90S/B5 90S/B14	90L/B5 90L/B14	100L/B5 100L/B14	112M/B5 112M/B14
k	515.5	504.5	556.5	597.5	597.5	626	646.5
k1	576.5	595.5	649.5	701	701	734.5	751
n / n1	121 / 97	137 / 112	155 / 121	176 / 132	176 / 132	193 / 147	215 / 158
m1 (B5)	140	160	200	200	200	250	250
m1 (B14)	-	105	120	140	140	160	160
x (B5)	-	-	-	-	-	23	23

Terminal Box

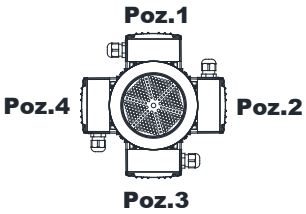

63-71-80-90-100-112

Optional Flange Dimensions

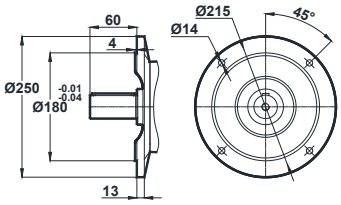

Opt. 1

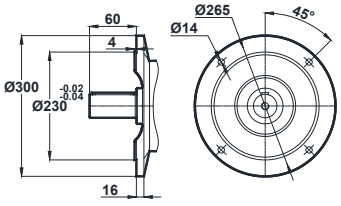

Opt. 2

* Dimension " k1" is for motors with brake.
x: If Motor is lower than foot mounting plane

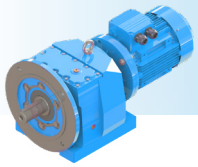

MVF - DIMENSION PAGES

Tapped center hole to DIN 332, sheet 2

MVF272
MVF273

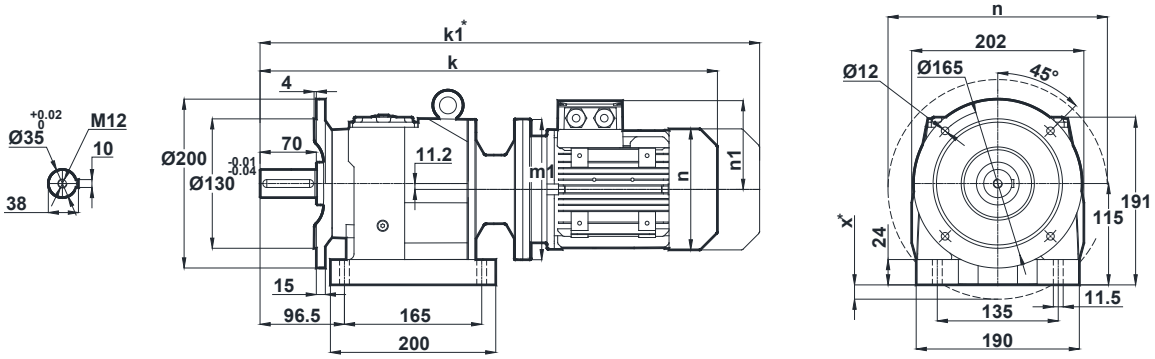

Motor Size									
IEC	63/B5	71/B5 71/B14	80/B5 80/B14	90S/B5 90S/B14	90L/B5 90L/B14	100L/B5 100L/B14	112M/B5 112M/B14	132S/B5 132S/B14	132M/B5 132M/B14
k	526.5	505.5	557.5	598.5	598.5	627	647.5	778.5	778.5
k1	577.5	596.5	650.5	702	702	735.5	752	908.5	908.5
n / n1	121 / 97	137 / 112	155 / 121	176 / 132	176 / 132	193 / 147	215 / 158	257 / 179	257 / 179
m1 (B5)	140	160	200	200	200	250	250	300	300
m1 (B14)	-	105	120	140	140	160	160	200	200
x (B5)	-	-	-	-	-	22	22	47	47

Terminal Box

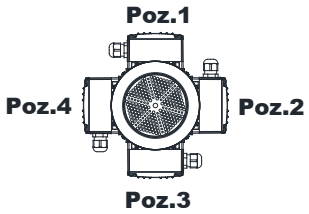

63-71-80-90-100-112-132

Optional Flange Dimensions

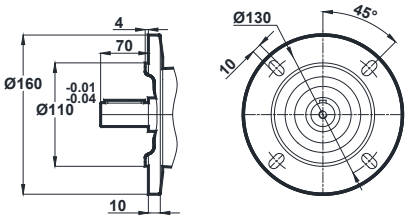

Opt. 1

* Dimension " k1" is for motors with brake.
x: If Motor is lower than foot mounting plane

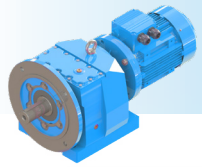

Tapped center hole to DIN 332, sheet 2

MVF275
MVF276

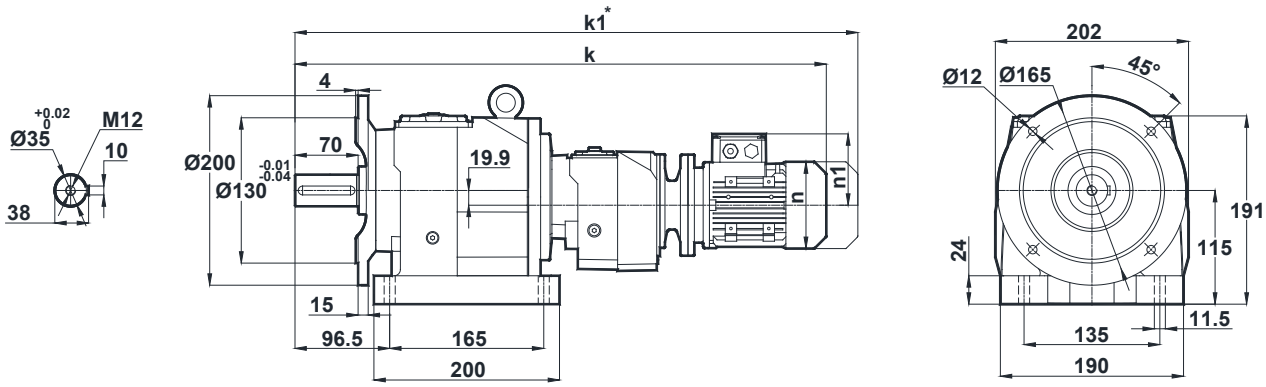

Motor Size		
IEC	63/B5 63/B14	71/B5 71/B14
k	632	651.5
k1	693	742.5
n / n1	121 / 97	137 / 112
m1 (B5)	140	160
m1 (B14)	90	105

Terminal Box

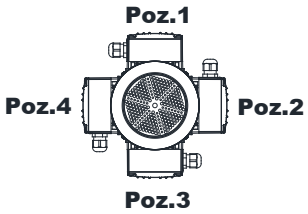

63-71

Optional Flange Dimensions

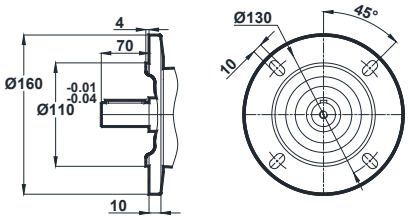

Opt. 1

* Dimension " k1" is for motors with brake.

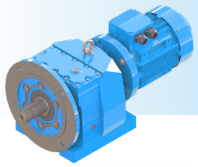

MVF - DIMENSION PAGES

Tapped center hole to DIN 332, sheet 2

MVF282
MVF283

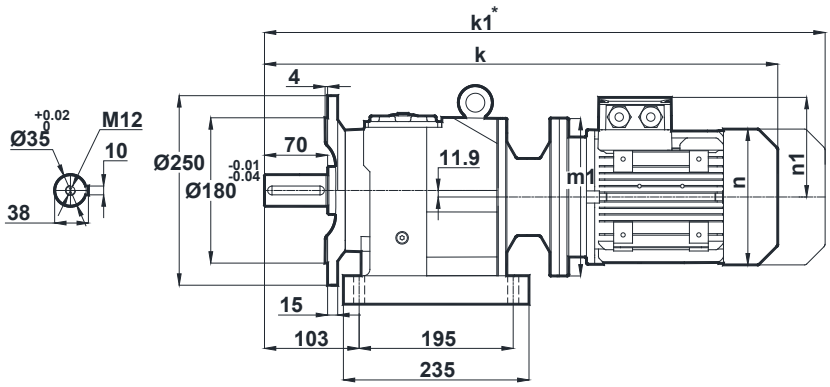

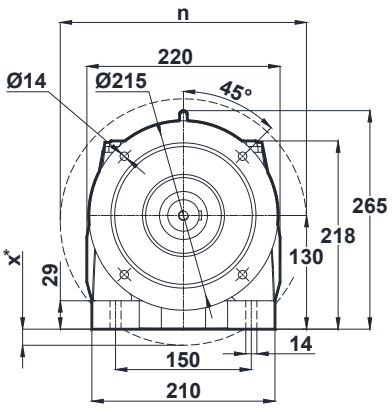

Motor Size								
IEC	71/B5	80/B5 80/B14	90S/B5 90S/B14	90L/B5 90L/B14	100L/B5 100L/B14	112M/B5 112M/B14	132S/B5 132S/B14	132M/B5 132M/B14
k	554	577	618	618	670.5	691	795	795
k1	645	670	721.5	721.5	779	795.5	925	925
n / n1	137 / 112	155 / 121	176 / 132	176 / 132	193 / 147	215 / 158	257 / 179	257 / 179
m1 (B5)	160	200	200	200	250	250	300	300
m1 (B14)	-	120	140	140	160	160	200	200
x (B5)	-	-	-	-	7	7	32	32

Terminal Box

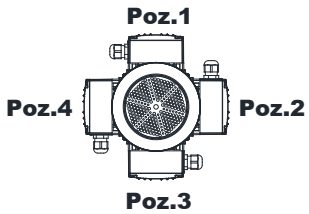

71-80-90-100-112-132

Optional Flange Dimensions

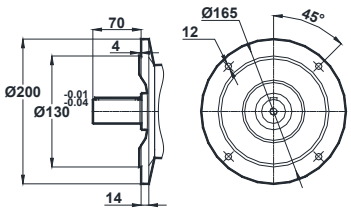

Opt. 1

* Dimension " k1" is for motors with brake.
x: If Motor is lower than foot mounting plane

Tapped center hole to DIN 332, sheet 2

MVF284

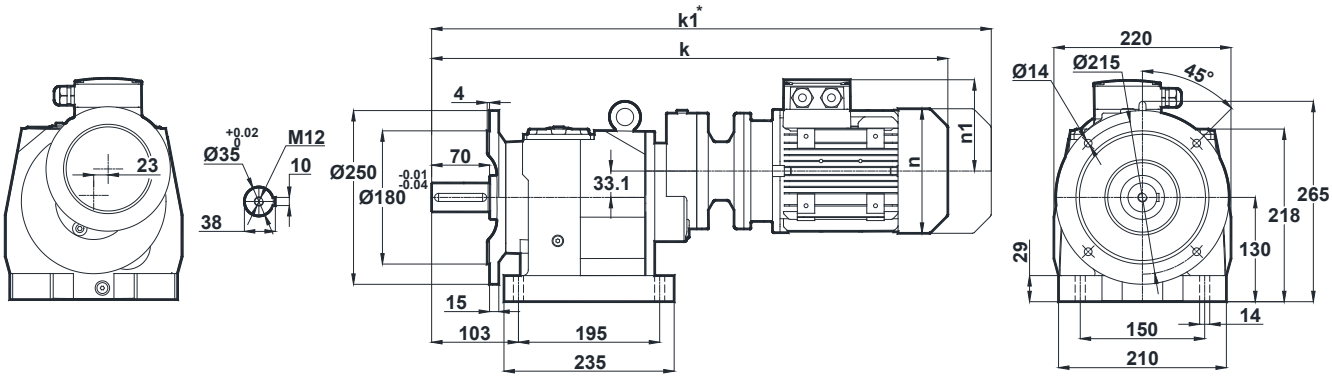

Motor Size		
IEC	63/B5	71/B5 71/B14
k	613	602
k1	674	693
n / n1	121 / 97	137 / 112
m1 (B5)	140	160
m1 (B14)	-	105

Terminal Box

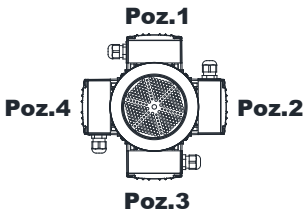

63-71

Optional Flange Dimensions

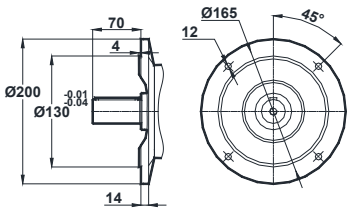

Opt. 1

* Dimension " k1" is for motors with brake.

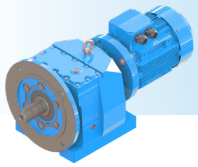

MVF - DIMENSION PAGES

Tapped center hole to DIN 332, sheet 2

MVF285
MVF286

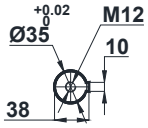

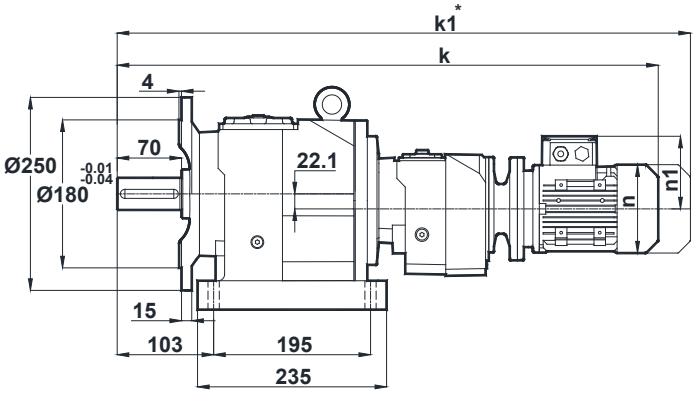

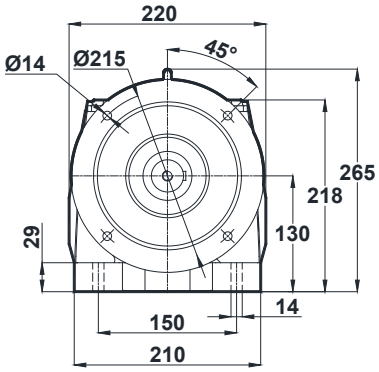

Motor Size	
IEC	63/B5 63/B14
k	681
k1	742
n / n1	121 / 97
m1 (B5)	140
m1 (B14)	90

Terminal Box

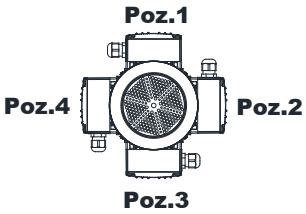

63

Optional Flange Dimensions

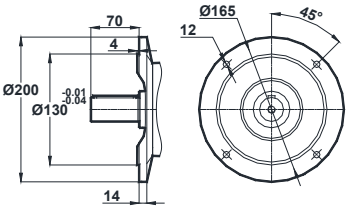

Opt. 1

* Dimension " k1" is for motors with brake.

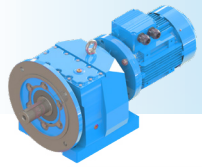

Tapped center hole to DIN 332, sheet 2

MVF372
MVF373

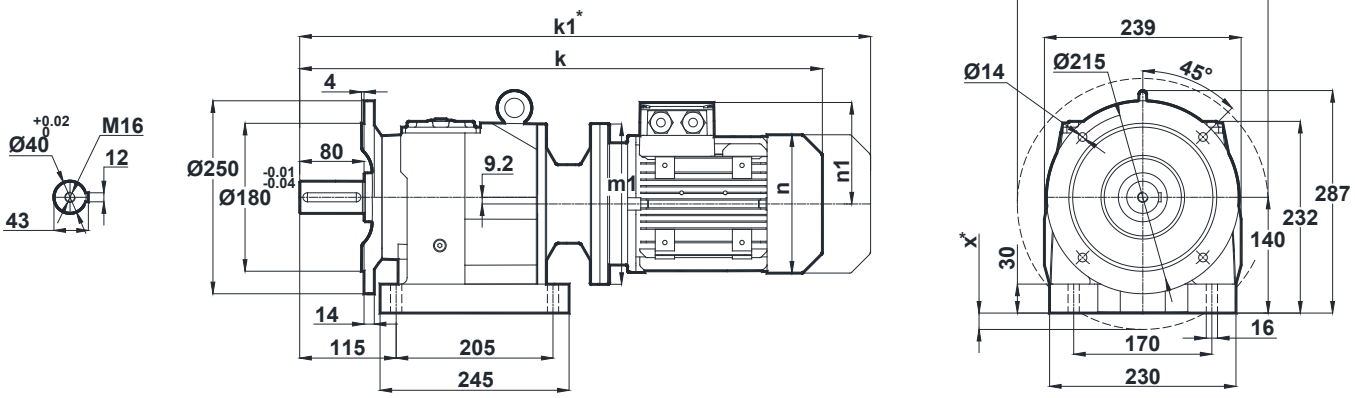

Motor Size								
IEC	71/B5	80/B5 80/B14	90S/B5 90S/B14	90L/B5 90L/B14	100L/B5 100L/B14	112M/B5 112M/B14	132S/B5 132S/B14	132M/B5 132M/B14
k	575	598	639	639	691.5	712	816	816
k1	666	691	742.5	742.5	800	816.5	946	946
n / n1	137 / 112	155 / 121	176 / 132	176 / 132	193 / 147	215 / 158	257 / 179	257 / 179
m1 (B5)	160	200	200	200	250	250	300	300
m1 (B14)	-	120	140	140	160	160	200	200
x (B5)	-	-	-	-	-	-	20	20

Terminal Box

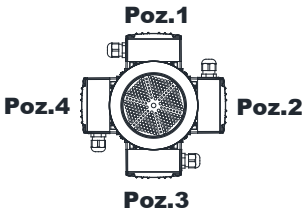

71-80-90-100-112-132

Optional Flange Dimensions

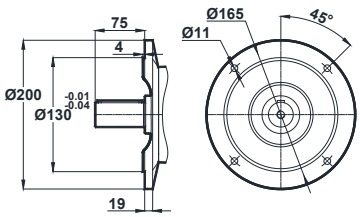

Opt. 1

* Dimension " k1" is for motors with brake.
x: If Motor is lower than foot mounting plane

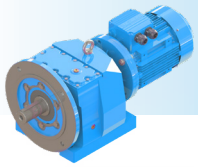

Tapped center hole to DIN 332, sheet 2

MVF374

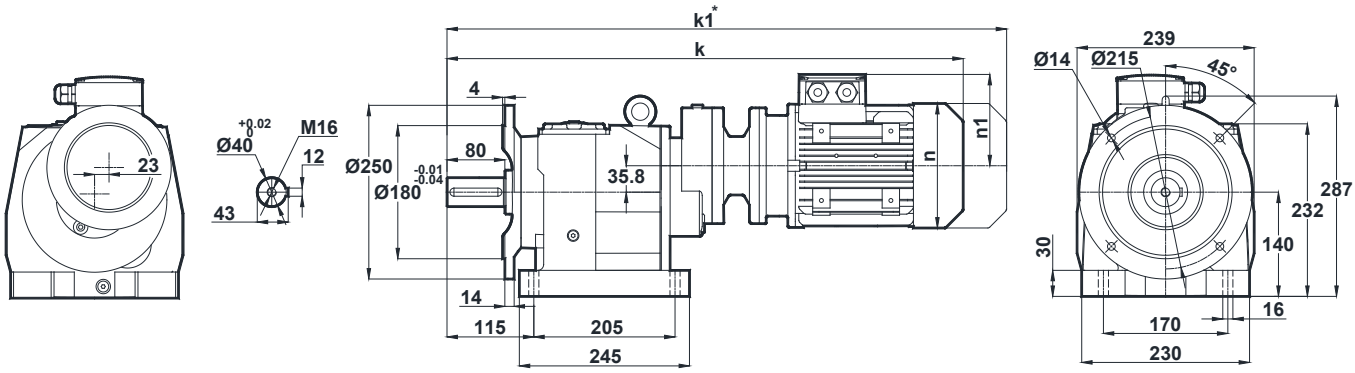

Motor Size			
IEC	63/B5	71/B5 71/B14	80/B5 80/B14
k	634	623	675
k1	695	714	768
n / n1	121 / 97	137 / 112	155 / 121
m1 (B5)	140	160	200
m1 (B14)	-	105	120

Terminal Box

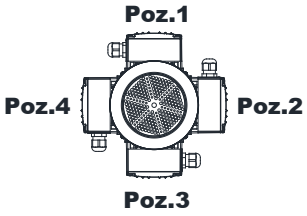

63-71-80

Optional Flange Dimensions

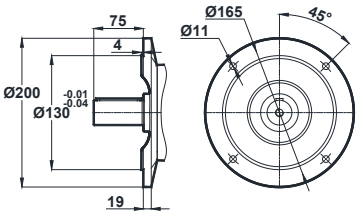

Opt. 1

* Dimension " k1" is for motors with brake.

Tapped center hole to DIN 332, sheet 2

MVF375
MVF376

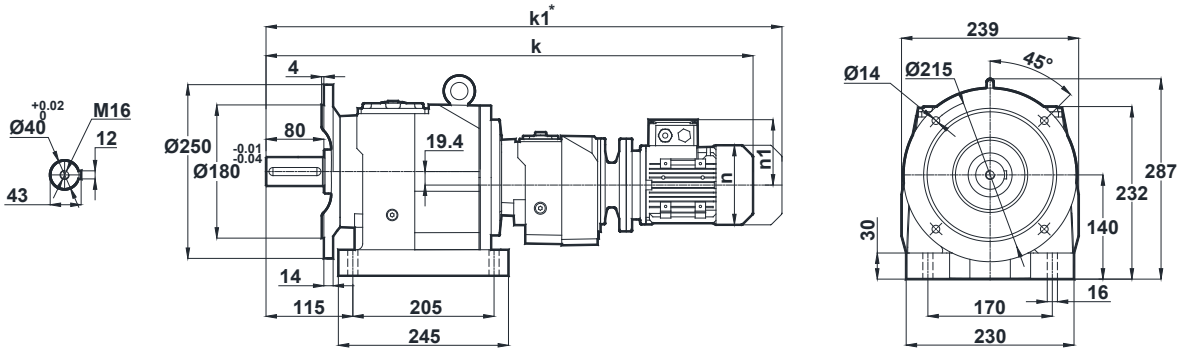

Motor Size	
IEC	63/B5 63/B14
k	702
k1	769
n / n1	121 / 97
m1 (B5)	140
m1 (B14)	90

Terminal Box

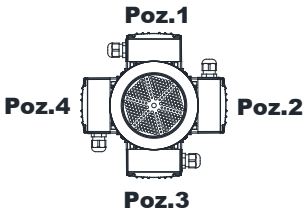

63

Optional Flange Dimensions

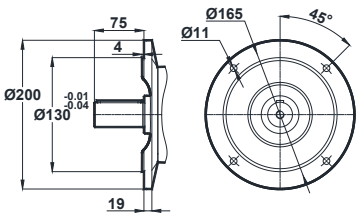

Opt. 1

* Dimension " k1" is for motors with brake.

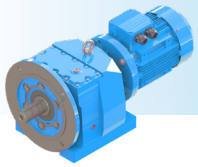

MVF - DIMENSION PAGES

Tapped center hole to DIN 332, sheet 2

MVF472
MVF473

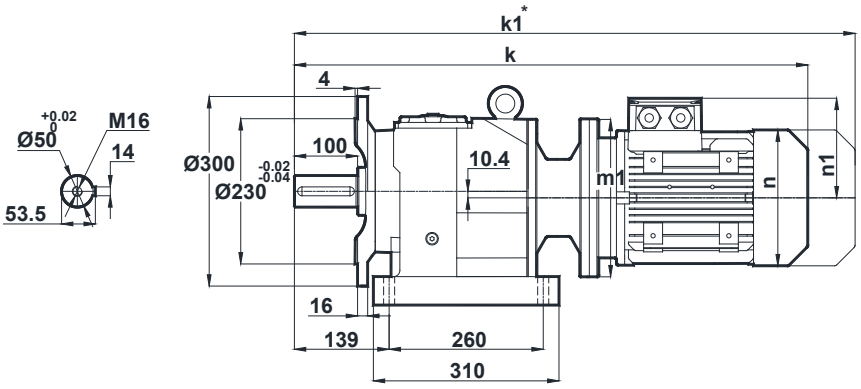

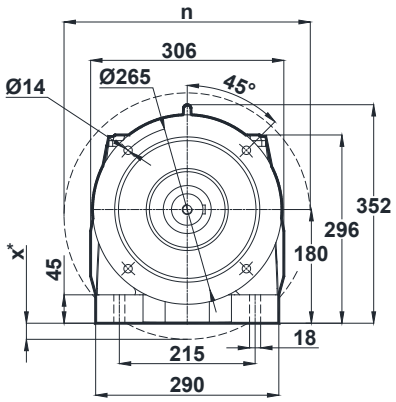

Motor Size											
IEC	80/B5	90S/B5 90S/B14	90L/B5 90L/B14	100L/B5 100L/B14	112M/B5 112M/B14	132S/B5 132S/B14	132M/B5 132M/B14	160M/B5	160L/B5	180M/B5	180L/B5
k	660.5	701.5	701.5	755.5	776	878.5	878.5	1038	1038	1126	1126
k1	753.5	805	805	864	880.5	1008.5	1008.5	1186	1186	1284.5	1284.5
n / n1	155 / 121	176 / 132	176 / 132	193 / 147	215 / 158	257 / 179	257 / 179	315 / 219	315 / 219	347 / 234	347 / 234
m1 (B5)	200	200	200	250	250	300	300	350	350	350	350
m1 (B14)	-	140	140	160	160	200	200	-	-	-	-
x (B5)	-	-	-	-	-	-	-	6	6	6	6

Terminal Box

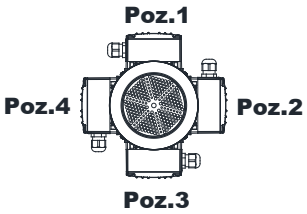

80-90-100-112-132-160-180

Optional Flange Dimensions

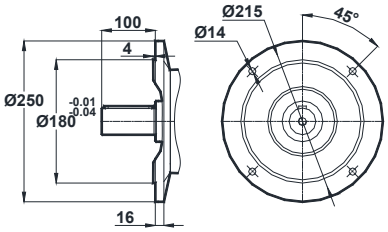

Opt. 1

* Dimension " k1" is for motors with brake.
x: If Motor is lower than foot mounting plane

Tapped center hole to DIN 332, sheet 2

MVF474

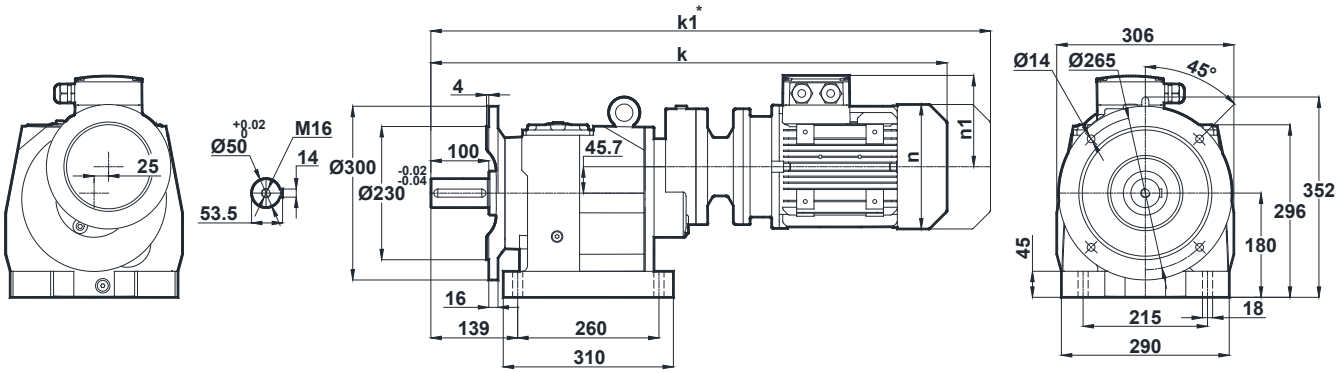

Motor Size		
IEC	71/B5	80/B5 80/B14
k	735.5	758.5
k1	826.5	851.5
n / n1	137 / 112	155 / 121
m1 (B5)	160	200
m1 (B14)	-	120

Terminal Box

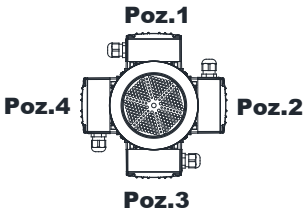

71-80

Optional Flange Dimensions

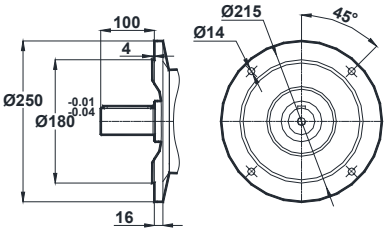

Opt. 1

* Dimension " k1" is for motors with brake.

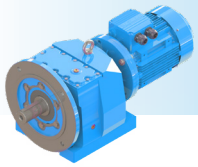

MVF - DIMENSION PAGES

Tapped center hole to DIN 332, sheet 2

MVF475
MVF476

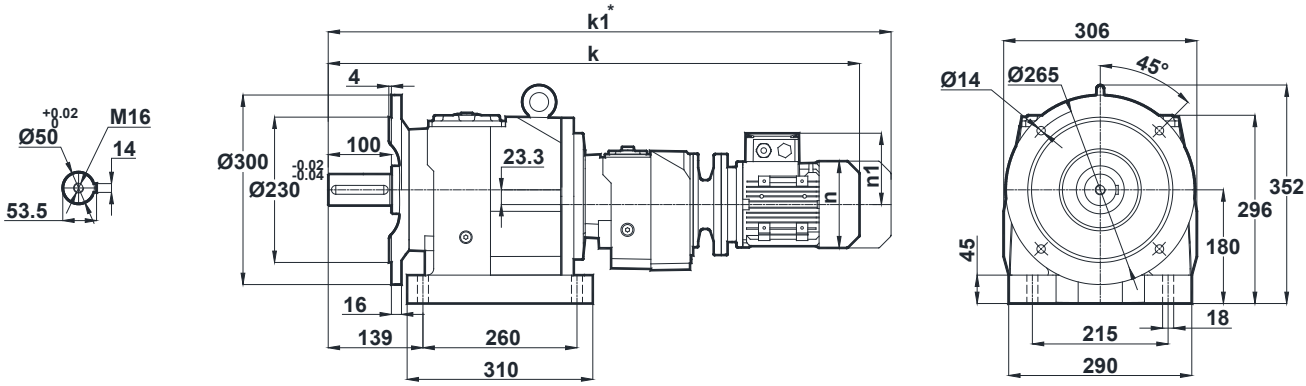

Motor Size		
IEC	63/B5	71/B5 71/B14
k	845.5	834.5
k1	906.5	925.5
n / n1	121 / 97	137 / 112
m1 (B5)	140	160
m1 (B14)	-	105

Terminal Box

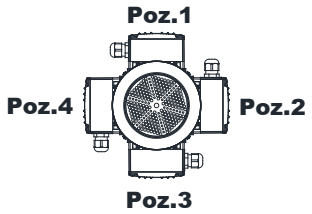

63-71

Optional Flange Dimensions

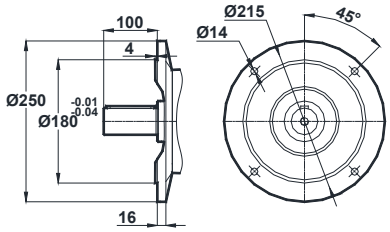

Opt. 1

* Dimension " k1" is for motors with brake.

DANA BREVINI®
Motion Systems

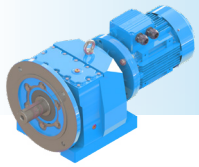

NRB - DIMENSION PAGES

Tapped center hole to DIN 332, sheet 2

NRB202
NRB203

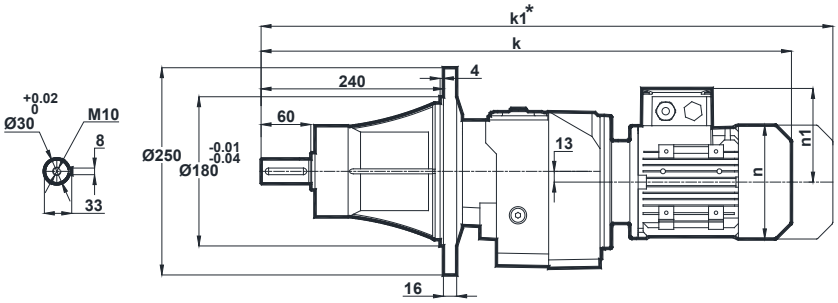

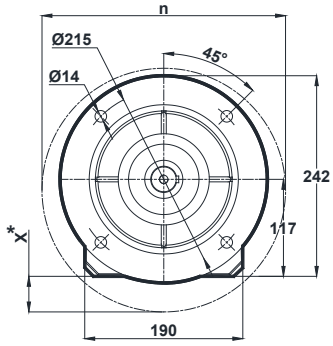

Motor Size							
	63	71	80	90S	90L	100L	112M
k	608	635	669	708	708	756	780
k1	669	726	762	811.5	811.5	864.5	884.5
n	121	137	155	176	176	193	215
n1	97	112	121	132	132	147	158
x	-	-	-	-	-	-	10

Terminal Box

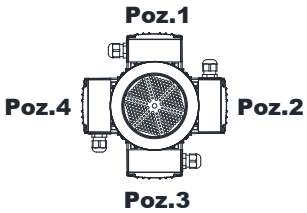

63-71-80-90-100-112

* Dimension " k1" is for motors with brake.
x: If Motor is lower than foot mounting plane

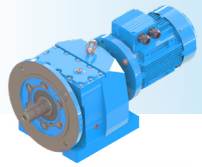

Tapped center hole to DIN 332, sheet 2

NRB272
NRB273

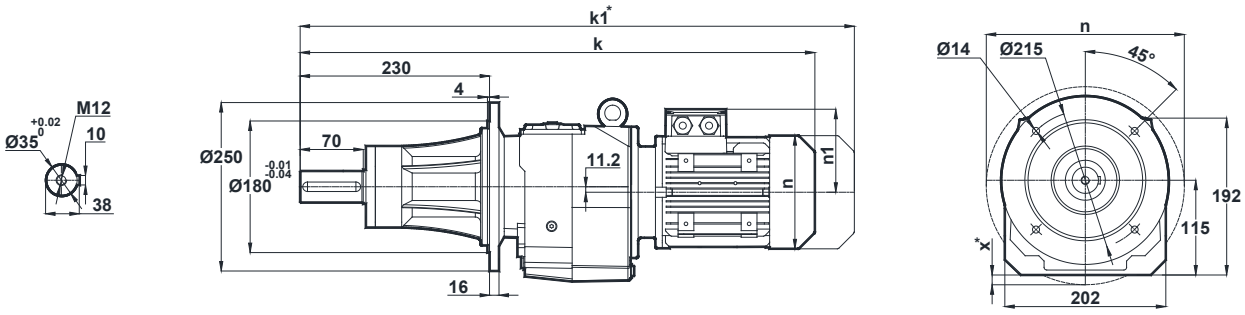

Motor Size									
	63	71	80	90S	90L	100L	112M	132S	132M
k	606	633	667	706	706	754	778	861	861
k1	667	724	760	809.5	809.5	862.5	882.5	991	991
n	121	137	155	176	176	193	215	257	257
n1	97	112	121	132	132	147	158	179	179
x	-	-	-	-	-	-	9	25	25

Terminal Box

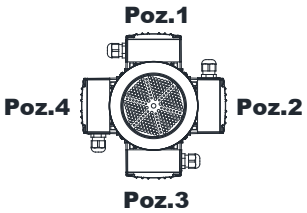

63-71-80-90-100-112-132

NRB275
NRB276

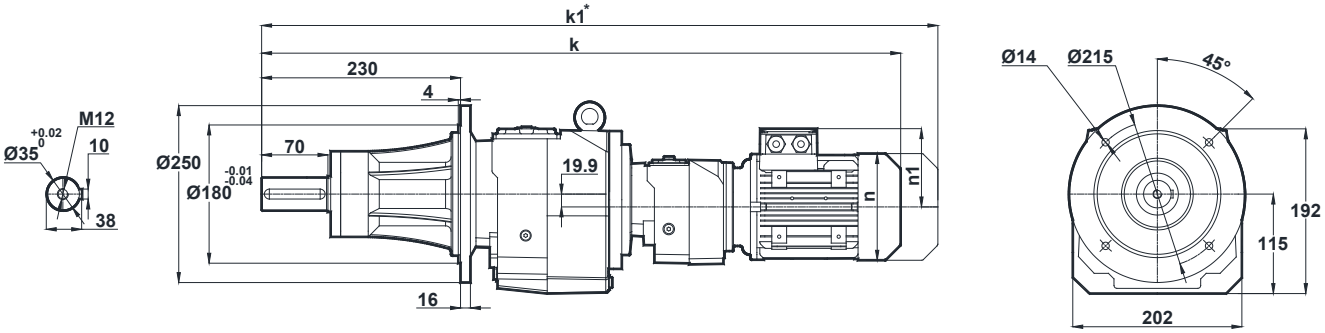

Motor Size		
	63	71
k	755	784
k1	816.5	875
n	121	137
n1	97	112

Terminal Box

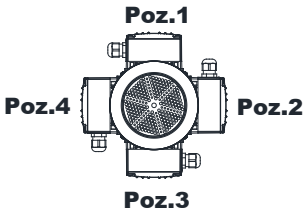

63-71

* Dimension " k1" is for motors with brake.
x: If Motor is lower than foot mounting plane

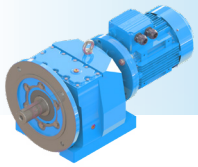

NRB - DIMENSION PAGES

Tapped center hole to DIN 332, sheet 2

NRB282
NRB283

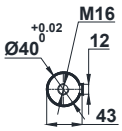

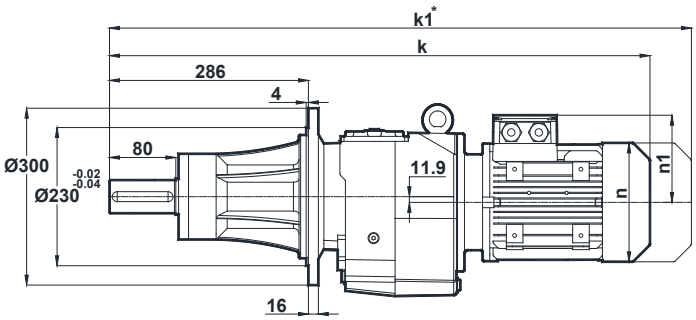

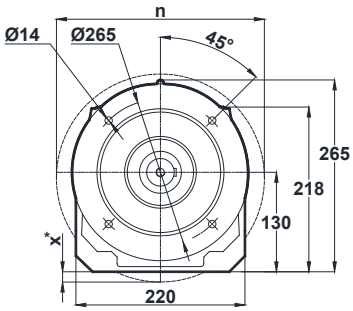

Motor Size								
	71	80	90S	90L	100L	112M	132S	132M
k	707	741	780	780	828	852	938.5	938.5
k1	798	834	883.5	883.5	936.5	956.5	1068.5	1068.5
n	137	155	176	176	193	215	257	257
n1	112	121	132	132	147	158	179	179
x	-	-	-	-	-	-	-	14

Terminal Box

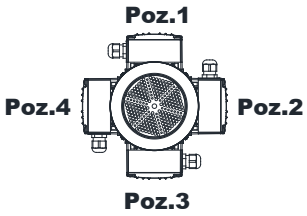

71-80-90-100-112-132

NRB284

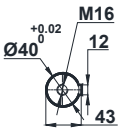

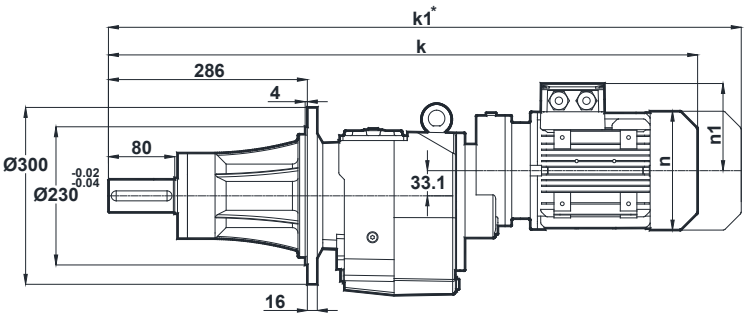

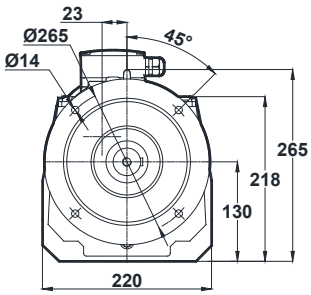

Motor Size		
	63	71
k	759	786
k1	820	877
n	121	137
n1	97	112

Terminal Box

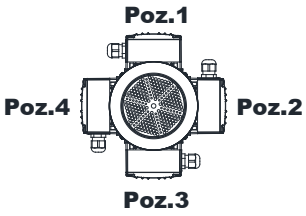

63-71

* Dimension " k1" is for motors with brake.
x: If Motor is lower than foot mounting plane

Tapped center hole to DIN 332, sheet 2

NRB285
NRB286

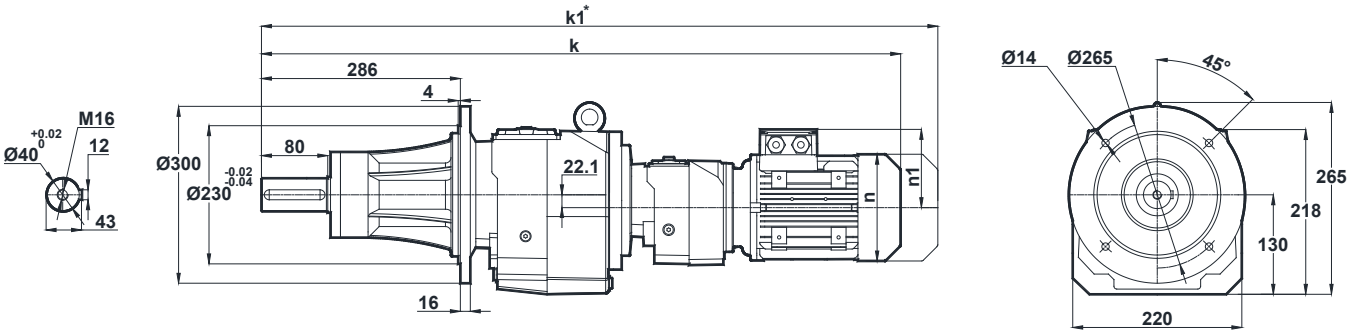

Motor Size	
	63
k	863.5
k1	924.5
n	121
n1	97

Terminal Box

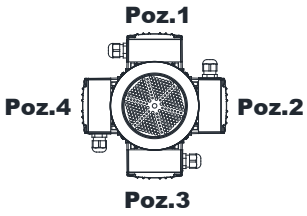

63

* Dimension " k1" is for motors with brake.

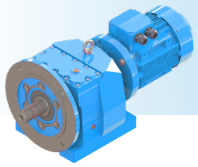

NRB - DIMENSION PAGES

Tapped center hole to DIN 332, sheet 2

NRB372
NRB373

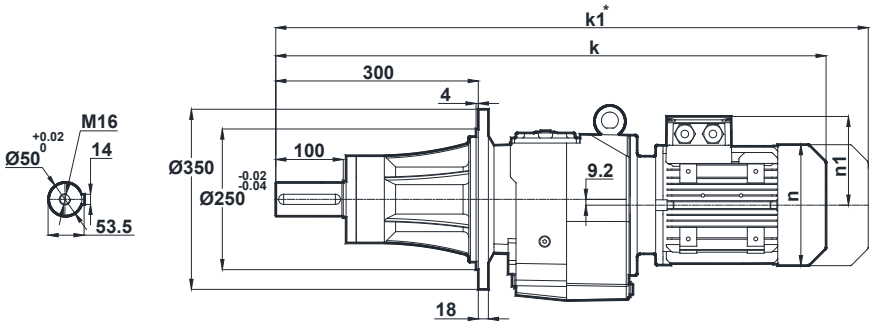

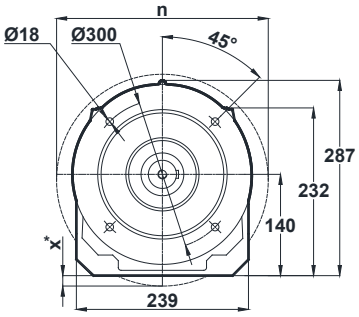

Motor Size								
	71	80	90S	90L	100L	112M	132S	132M
k	729.5	763.5	802.5	802.5	850.5	874.5	961	961
k1	820.5	856.5	906	906	959	979	1091	1091
n	137	155	176	176	193	215	257	257
n1	112	121	132	132	147	158	179	179
x	-	-	-	-	-	-	2	30

Terminal Box

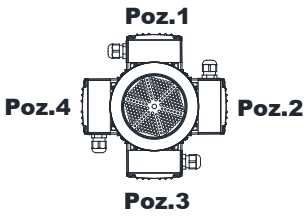

71-80-90-100-112-132

NRB374

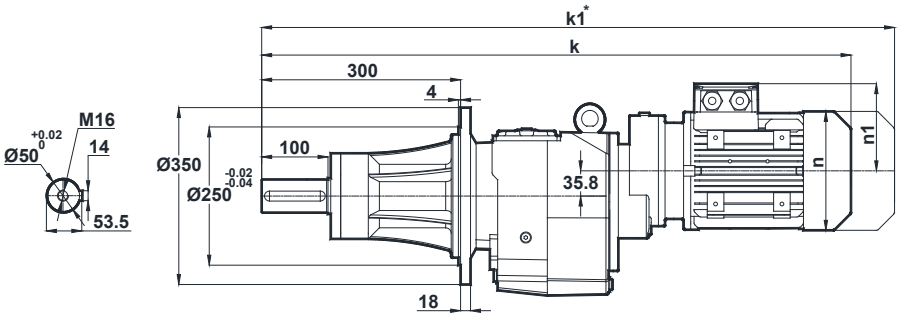

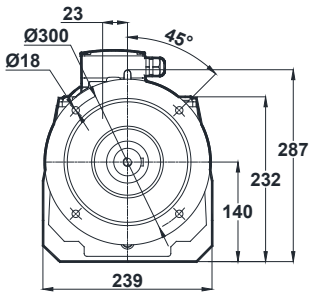

Motor Size			
	63	71	80
k	781.5	808.5	842.5
k1	842.5	899.5	935.5
n	121	137	155
n1	97	112	121

Terminal Box

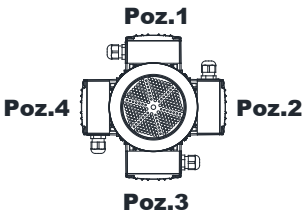

63-71-80

* Dimension " k1" is for motors with brake.
x: If Motor is lower than foot mounting plane

Tapped center hole to DIN 332, sheet 2

NRB375
NRB376

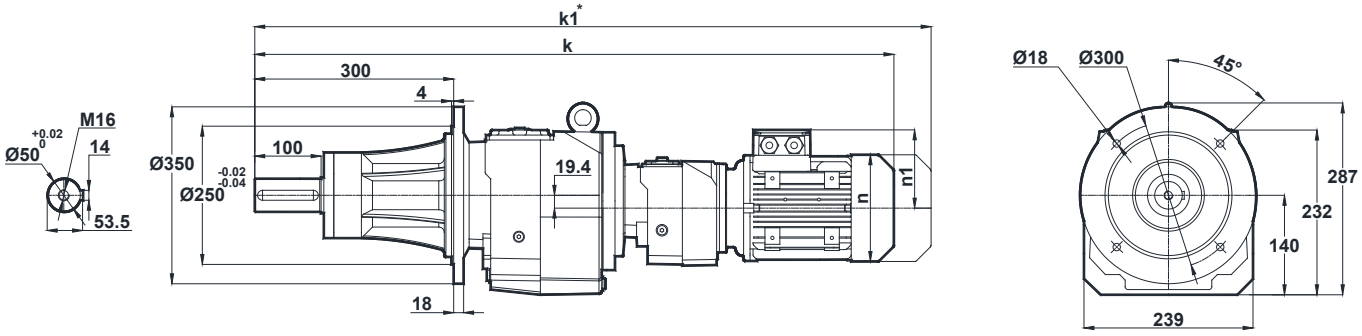

Motor Size	
	63
k	886
k1	947
n	121
n1	97

Terminal Box

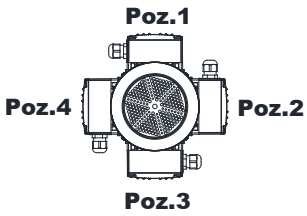

63

* Dimension " k1" is for motors with brake.

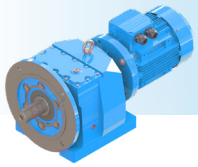

NRB - DIMENSION PAGES

Tapped center hole to DIN 332, sheet 2

NRB472
NRB473

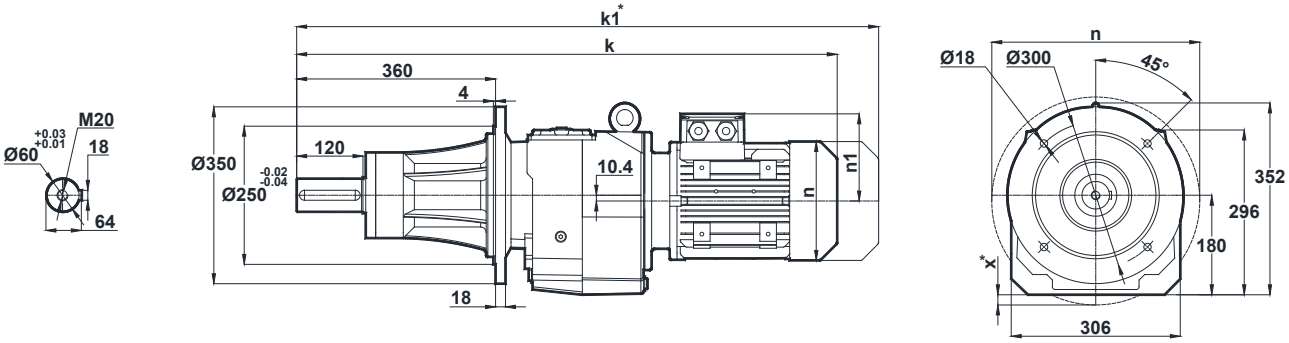

Motor Size											
	80	90S	90L	100L	112M	132S	132M	160M	160L	180M	180L
k	870.5	909.5	909.5	954.5	978.5	1063.5	1063.5	1159.5	1159.5	1231.5	1231.5
k1	963.5	1013	1013	1063	1083	1193.5	1193.5	1307.5	1307.5	1390	1390
n	155	176	176	193	215	257	257	315	315	347	347
n1	121	132	132	147	158	179	179	219	219	234	234
x	-	-	-	-	-	-	-	-	-	11	11

Terminal Box

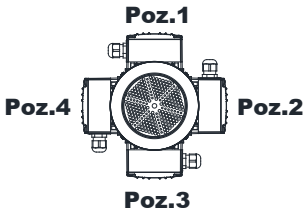

80-90-100-112-132-160-180

NRB474

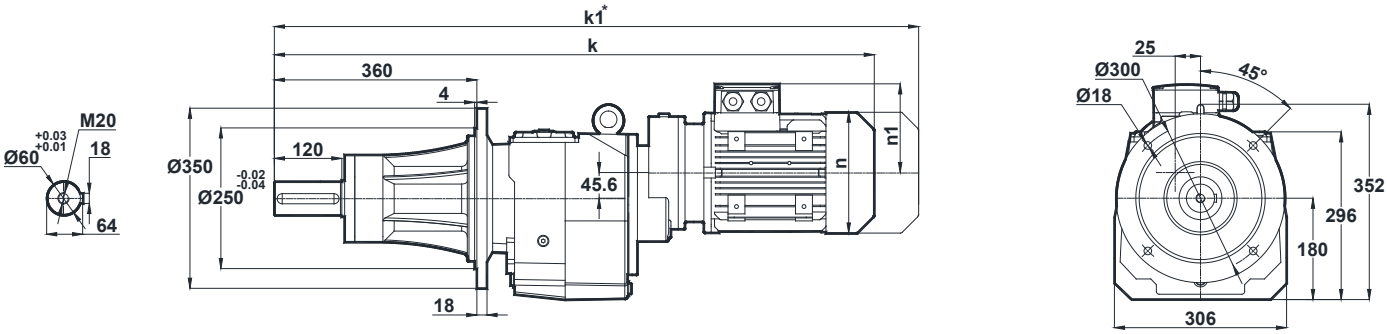

Motor Size		
	71	80
k	930	964
k1	1021	1057
n	137	155
n1	112	121

Terminal Box

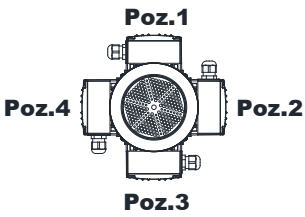

71-80

* Dimension " k1" is for motors with brake.
x: If Motor is lower than foot mounting plane

Tapped center hole to DIN 332, sheet 2

NRB475
NRB476

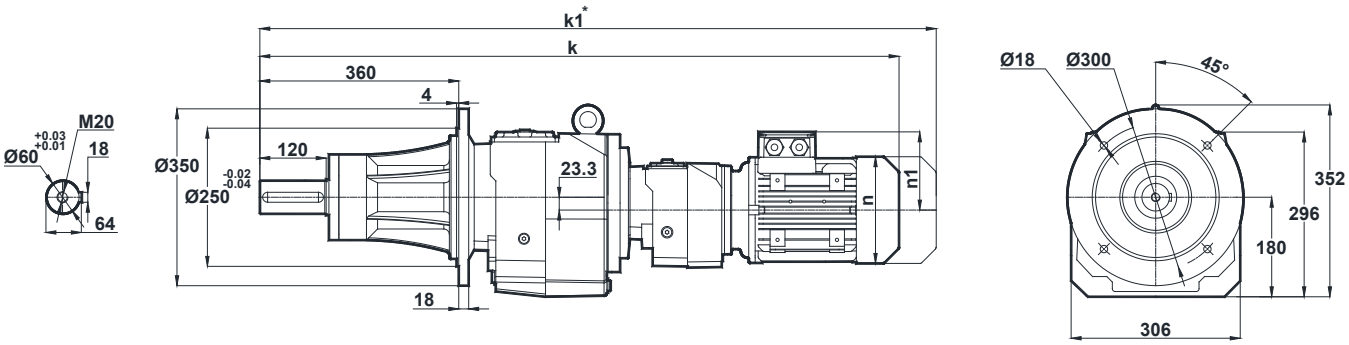

Motor Size		
	63	71
k	1033	1060
k1	1094	1151
n	121	137
n1	97	112

Terminal Box

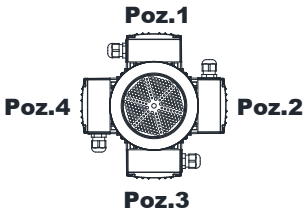

63-71

* Dimension " k1" is for motors with brake.

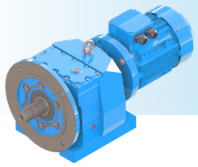

NRB - DIMENSION PAGES

Tapped center hole to DIN 332, sheet 2

NRB572
NRB573

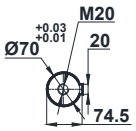

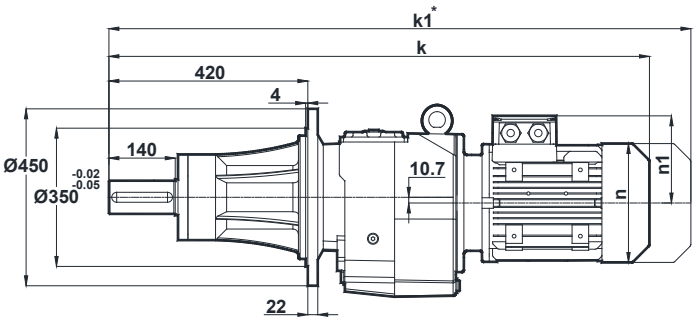

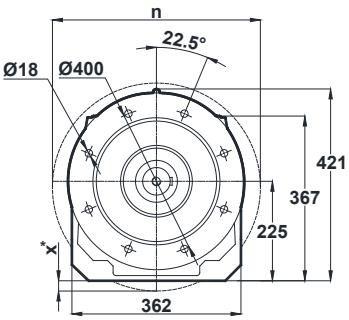

Motor Size									
	100L	112M	132S	132M	160M	160L	180M	180L	200L
k	1057	1081	1167.5	1167.5	1263.5	1263.5	1335.5	1335.5	1381.5
k1	1165.5	1185.5	1297.5	1297.5	1411.5	1411.5	1494	1494	1568
n	193	215	257	257	315	315	347	347	390
n1	147	158	179	179	219	219	234	234	275
x	-	-	-	-	-	-	-	-	-

Terminal Box

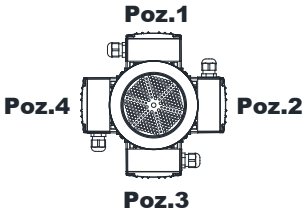

100-112-132-160-180-200

NRB574

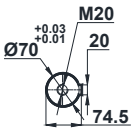

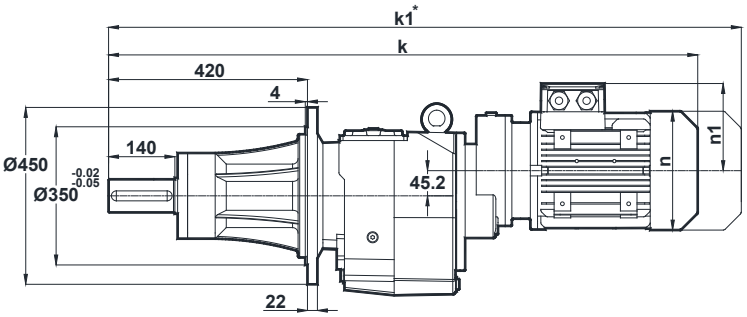

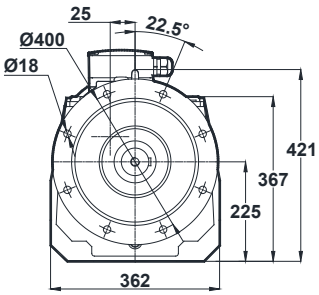

Motor Size				
	71	80	90S	90L
k	1037	1071	1110	1110
k1	1128	1164	1213.5	1213.5
n	137	155	176	176
n1	112	121	132	132

Terminal Box

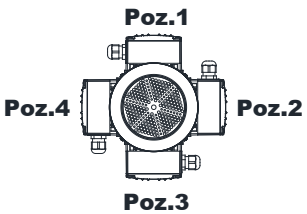

71-80-90

* Dimension " k1" is for motors with brake.
x: If Motor is lower than foot mounting plane

Tapped center hole to DIN 332, sheet 2

NRB575
NRB576

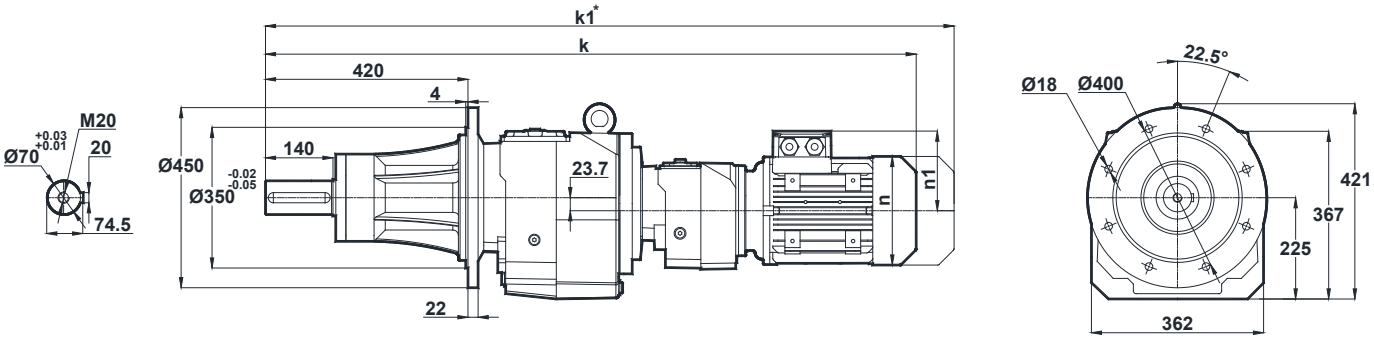

Motor Size		
	63	71
k	1142	1169
k1	1203	1260
n	121	137
n1	97	112

Terminal Box

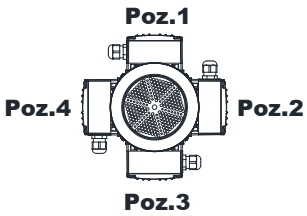

63-71

* Dimension " k1" is for motors with brake.

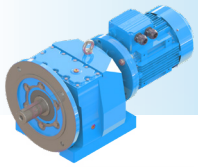

NRB - DIMENSION PAGES

Tapped center hole to DIN 332, sheet 2

NRB672
NRB673

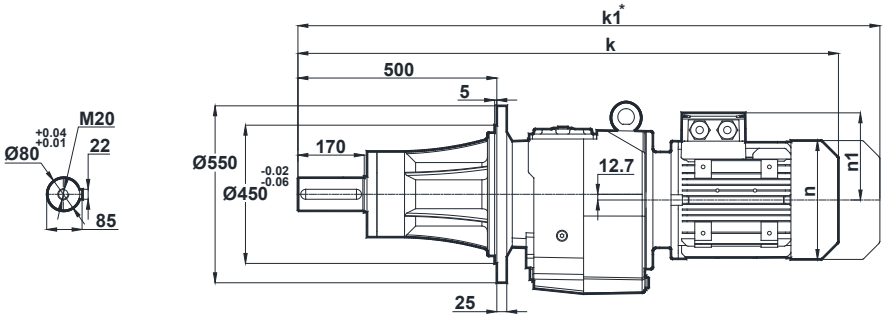

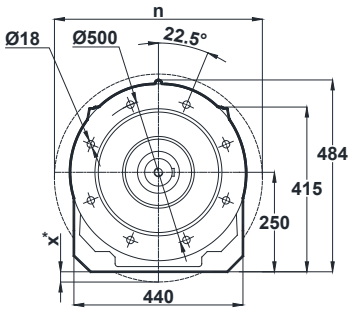

	Motor Size									
	112M	132S	132M	160M	160L	180M	180L	200L	225S	225M
k	1198	1284.5	1284.5	1380.5	1380.5	1452.5	1452.5	1498.5	1525	1550
k1	1302.5	1414.5	1414.5	1528.5	1528.5	1611	1611	1685	1690	1715
n	215	257	257	315	315	347	347	390	434	434
n1	158	179	179	219	219	234	234	275	285	285
x	-	-	-	-	-	-	-	-	-	-

Terminal Box

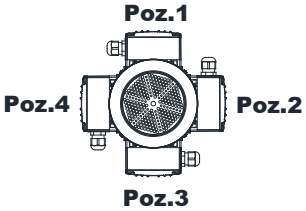

112-132-160-180-200-225

NRB674

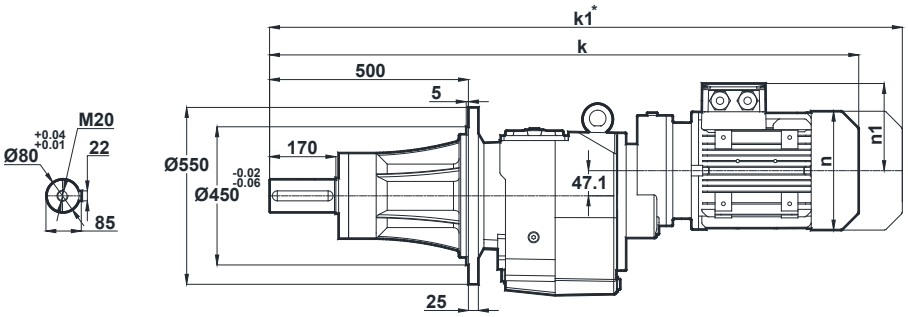

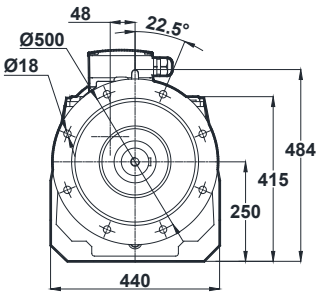

	Motor Size		
	80	90S	90L
k	1206.5	1245.5	1245.5
k1	1299.5	1349	1349
n	155	176	176
n1	121	132	132

Terminal Box

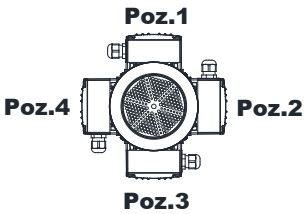

80-90

* Dimension " k1" is for motors with brake.
x: If Motor is lower than foot mounting plane

Tapped center hole to DIN 332, sheet 2

NRB675
NRB676

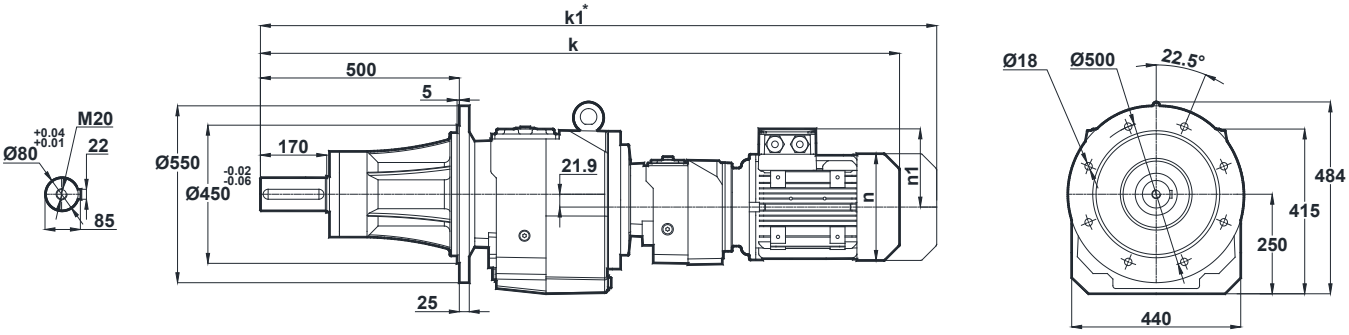

Motor Size		
	71	80
k	1318.5	1352.5
k1	1409.5	1445.5
n	137	155
n1	112	121

Terminal Box

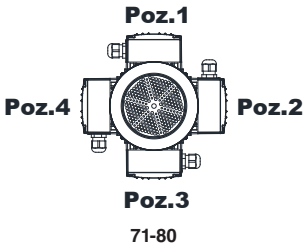

* Dimension " k1" is for motors with brake.

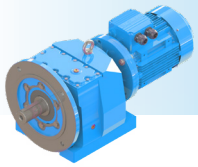

NRB - DIMENSION PAGES

Tapped center hole to DIN 332, sheet 2

NRB772
NRB773

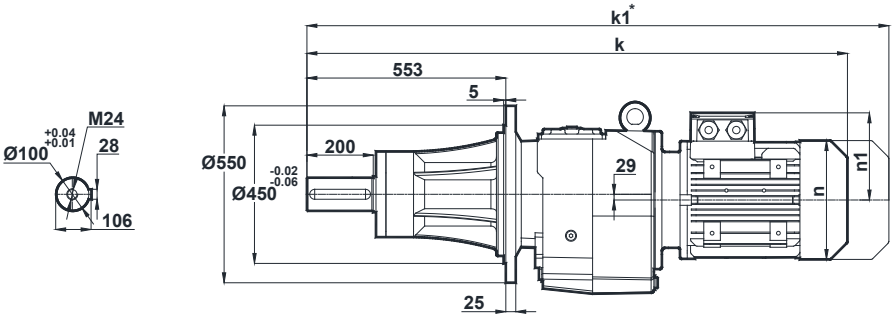

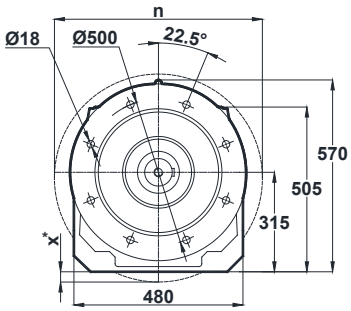

Motor Size										
	132S	132M	160M	160L	180M	180L	200L	225S	225M	250M
k	1383.5	1383.5	1479.5	1479.5	1551.5	1551.5	1597.5	1624.5	1649.5	1741.5
k1	1513.5	1513.5	1627.5	1627.5	1710	1710	1784	1789.5	1814.5	1912
n	257	257	315	315	347	347	390	434	434	480
n1	179	179	219	219	234	234	275	285	285	322
x	-	-	-	-	-	-	-	-	-	-

Terminal Box

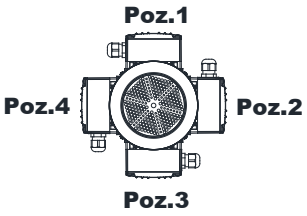

132-160-180-200-225-250

NRB774

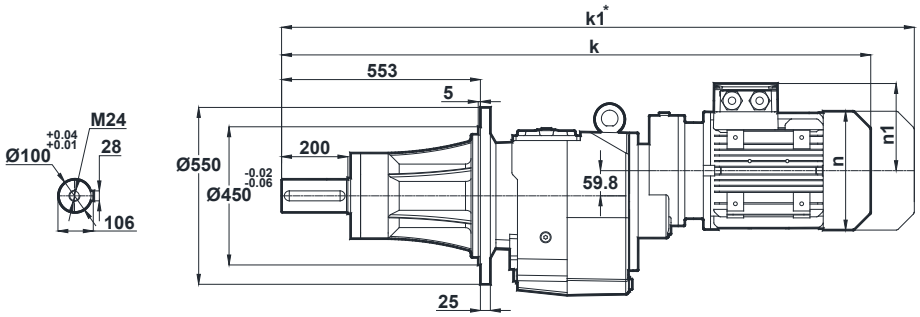

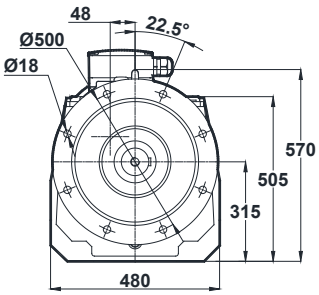

Motor Size				
	80	90S	90L	100L
k	1309.5	1348.5	1348.5	1393.5
k1	1402.5	1452	1452	1502
n	155	176	176	193
n1	121	132	132	147

Terminal Box

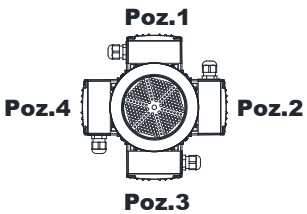

80-90-100

* Dimension " k1" is for motors with brake.
x: If Motor is lower than foot mounting plane

Tapped center hole to DIN 332, sheet 2

NRB775
NRB776

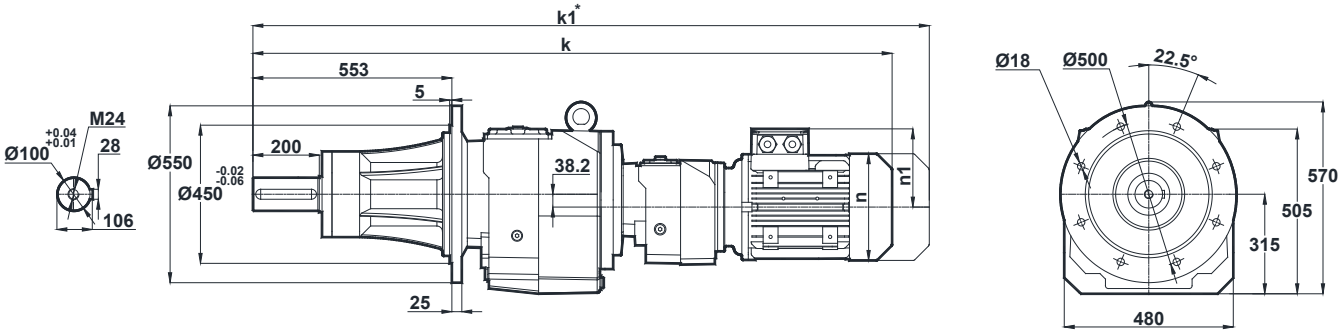

Motor Size				
	71	80	90S	90L
k	1424.5	1458.5	1497.5	1497.5
k1	1515.5	1551.5	1601	1601
n	137	155	176	176
n1	112	121	132	132

Terminal Box

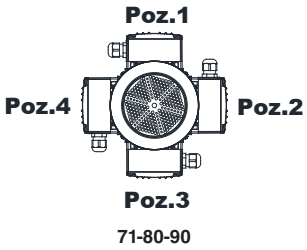

* Dimension " k1" is for motors with brake.

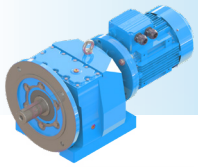

NRB - DIMENSION PAGES

Tapped center hole to DIN 332, sheet 2

NRB872
NRB873

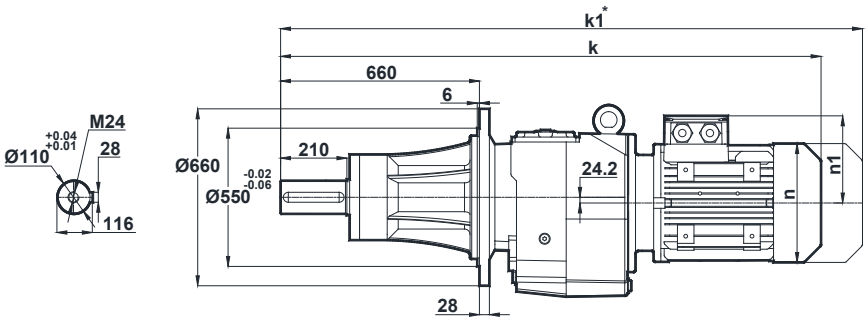

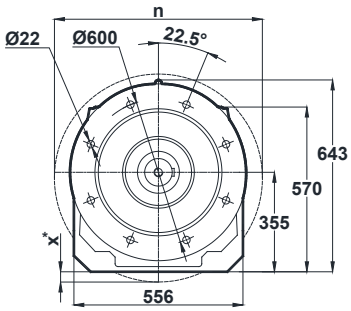

Motor Size											
	132M	160M	160L	180M	180L	200L	225S	225M	250M	280S	280M
k	1559.5	1655.5	1655.5	1727.5	1727.5	1773.5	1803	1828	1918.5	1980.5	1980.5
k1	1689.5	1803.5	1803.5	1886	1886	1960	1968	1993	2089	2153.5	2159.5
n	257	315	315	347	347	390	434	434	480	544	544
n1	179	219	219	234	234	275	285	285	322	350	350
x	-	-	-	-	-	-	-	-	-	-	-

Terminal Box

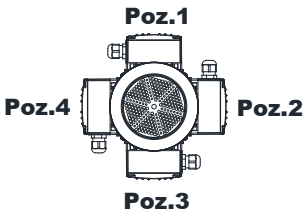

132-160-180-200-225-250-280

NRB874

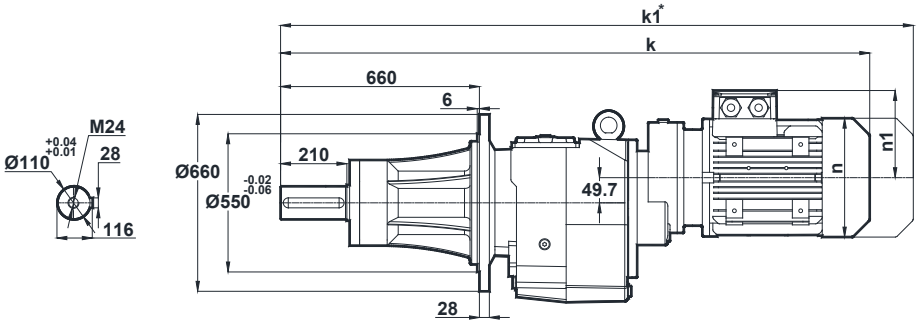

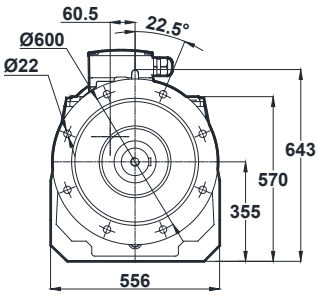

Motor Size				
	100L	112M	132S	132M
k	1591	1615	1701.5	1701.5
k1	1699.5	1719.5	1831.5	1831.5
n	193	215	257	257
n1	147	158	179	179

Terminal Box

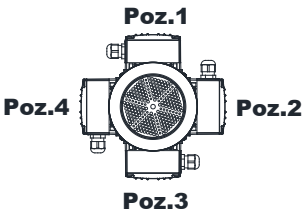

100-112-132

* Dimension " k1" is for motors with brake.
x: If Motor is lower than foot mounting plane

Tapped center hole to DIN 332, sheet 2

NRB875
NRB876

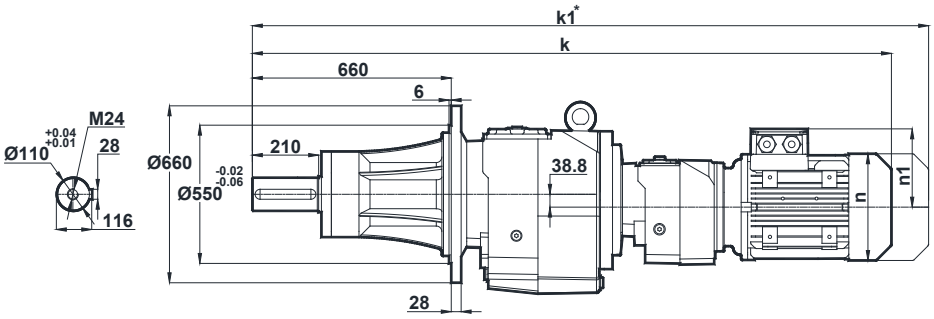

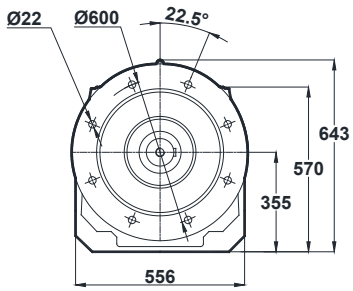

Motor Size					
	71	80	90S	90L	100L
k	1608.5	1642.5	1681.5	1681.5	1729.5
k1	1699.5	1735.5	1785	1785	1838
n	137	155	176	176	193
n1	112	121	132	132	147

Terminal Box

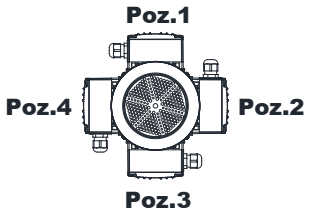

71-80-90-100

* Dimension " k1" is for motors with brake.

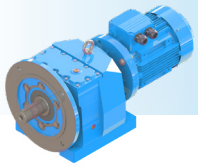

NRB - DIMENSION PAGES

Tapped center hole to DIN 332, sheet 2

NRB972
NRB973

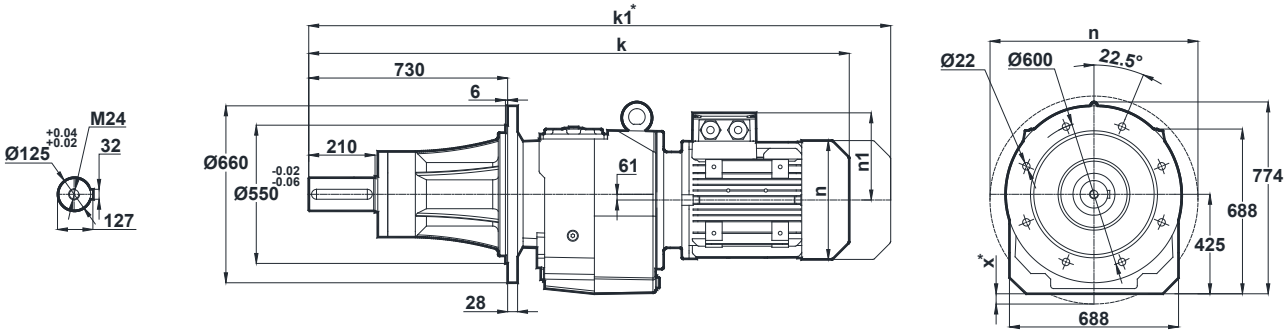

Motor Size												
	160M	160L	180M	180L	200L	225S	225M	250M	280S	280M	315S	315M
k	1791	1791	1863	1863	1909	1922.5	1950.5	2041	2103	2103	2257	2257
k1	1965	1965	2020.5	2020.5	2091.5	2088	2111	2219.5	2283	2289	-	-
n	315	315	347	347	390	434	434	480	544	544	614	614
n1	219	219	234	234	275	285	285	322	350	350	510	510
x	-	-	-	-	-	-	-	-	-	-	-	-

Terminal Box

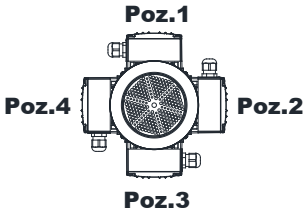

160-180-200-225-250-280-315

NRB974

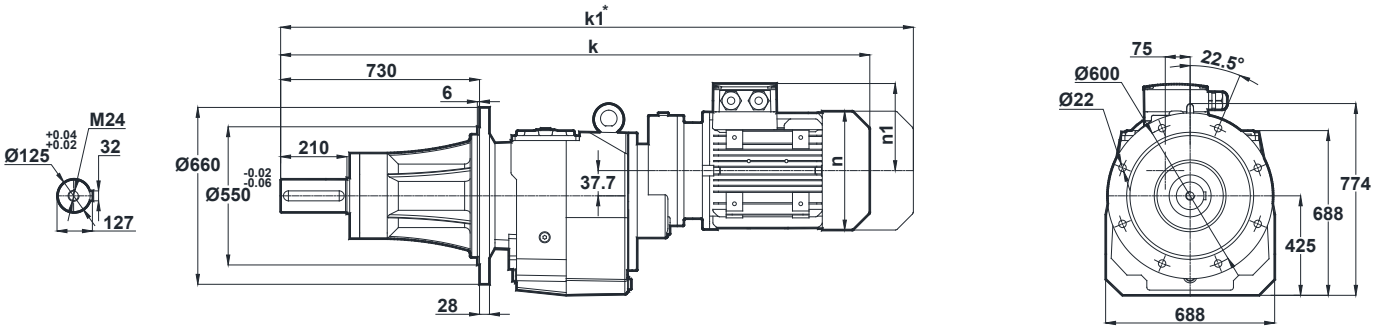

Motor Size				
	100L	112M	132S	132M
k	1760.5	1784.5	1871	1871
k1	1869	1889	2001	2001
n	193	215	257	257
n1	147	158	179	179

Terminal Box

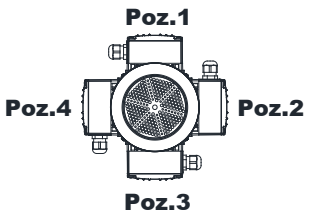

100-112-132

* Dimension " k1" is for motors with brake.
x: If Motor is lower than foot mounting plane

Tapped center hole to DIN 332, sheet 2

NRB975
NRB976

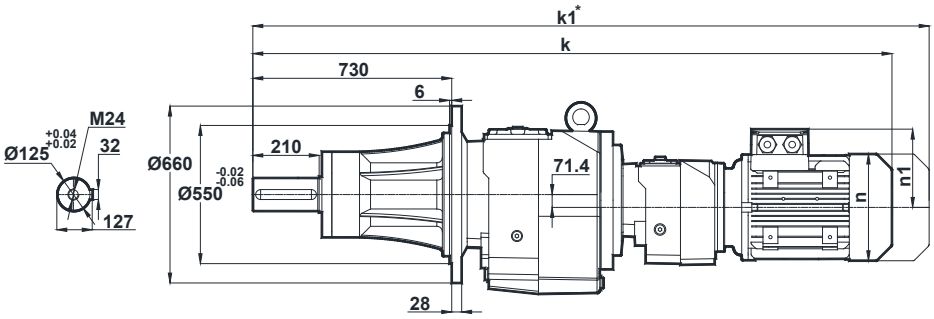

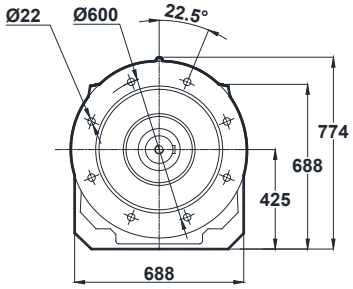

Motor Size						
	80	90S	90L	100L	112M	132S
k	1839	1878	1878	1923	1947	2032
k1	1932	1981.5	1981.5	2031.5	2051.5	2162
n	155	176	176	193	215	257
n1	121	132	132	147	158	179

Terminal Box

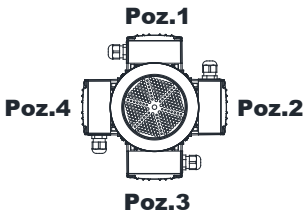

80-90-100-112-132

* Dimension " k1" is for motors with brake.

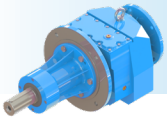

NNB - DIMENSION PAGES

Tapped center hole to DIN 332, sheet 2

NNB202-A..
NNB203-A..

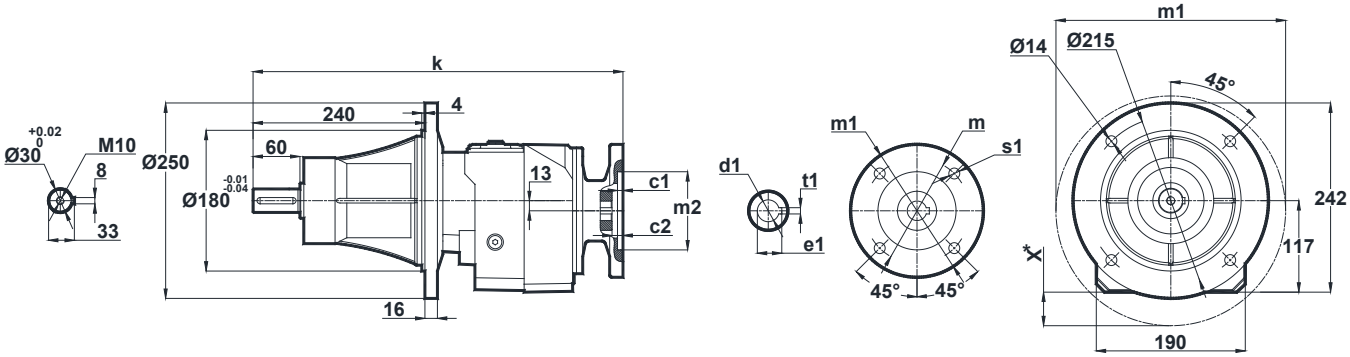

IEC	c1	c2	s1	m	m1	m2	u	k	d1	t1	e1	x
63/B5	4	5	9	115	140	95	12	487.5	11	4	12.8	-
71/B5	4	8.5	11	130	160	110	12	458.5	14	5	16.3	-
80/B5	4	5	12	165	200	130	12	487.5	19	6	21.8	-
90/B5	4	5	12	165	200	130	12	487.5	24	8	27.3	-
100/B5	4.5	5.5	15	215	250	180	12	480.5	28	8	31.3	23
112/B5	4.5	5.5	15	215	250	180	12	480.5	28	8	31.3	23

NNB202-B..
NNB203-B..

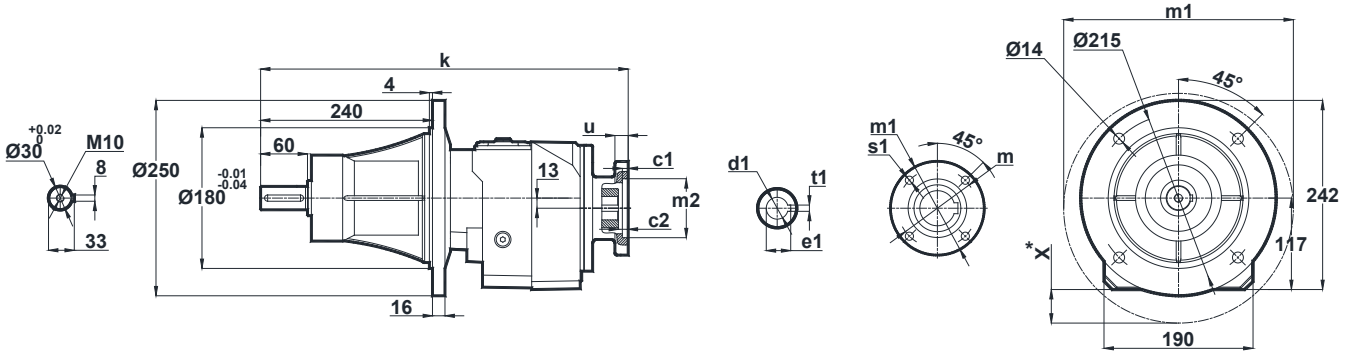

IEC	c1	c2	s1	m	m1	m2	u	k	d1	t1	e1	x
71/B14	3	8.5	7	85	105	70	10	458.5	14	5	16.3	-
80/B14	4	5	7	100	120	80	12	487.5	19	6	21.8	-
90/B14	4	5	9	115	140	95	12	487.5	24	8	27.3	-
100/B14	4	5.5	9	130	160	110	12	480.5	28	8	31.3	-
112/B14	4	5.5	9	130	160	110	12	480.5	28	8	31.3	-

x: If Motor is lower than foot mounting plane

Tapped center hole to DIN 332, sheet 2

NNB272-A..
NNB273-A..

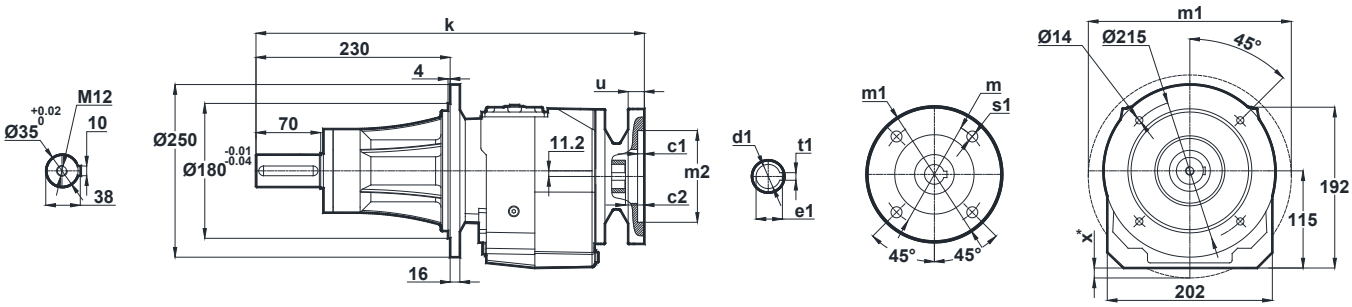

IEC	c1	c2	s1	m	m1	m2	u	k	d1	t1	e1	x
63/B5	4	5	9	115	140	95	12	485.5	11	4	12.8	-
71/B5	4	8.5	11	130	160	110	12	456.5	14	5	16.3	-
80/B5	4	5	12	165	200	130	12	488.5	19	6	21.8	-
90/B5	4	5	12	165	200	130	12	485.5	24	8	27.3	-
100/B5	4.5	5.5	15	215	250	180	12	478.5	28	8	31.3	22
112/B5	4.5	5.5	15	215	250	180	12	478.5	28	8	31.3	22
132/B5	4.5	7	15	265	300	230	15	515.5	38	10	41.3	47

NNB272-B..
NNB273-B..

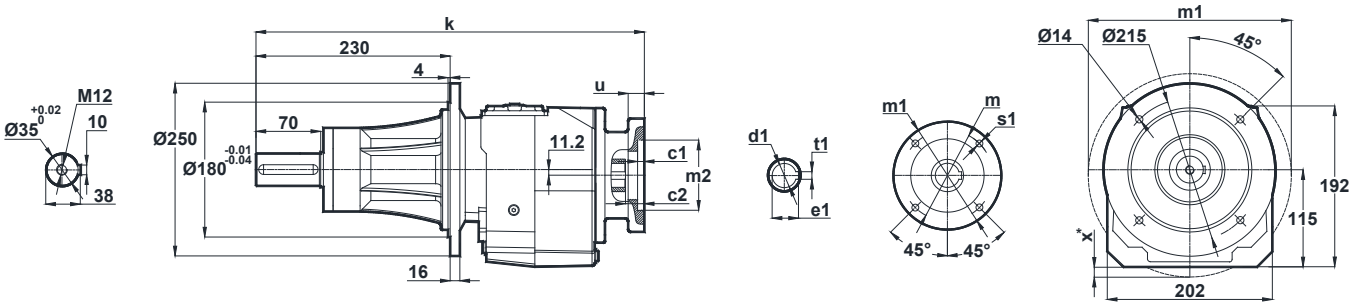

IEC	c1	c2	s1	m	m1	m2	u	k	d1	t1	e1	x
71/B14	3	8.5	7	85	105	70	10	456.5	14	5	16.3	-
80/B14	4	5	7	100	120	80	12	488.5	19	6	21.8	-
90/B14	4	5	9	115	140	95	12	485.5	24	8	27.3	-
100/B14	4	5.5	9	130	160	110	12	478.5	28	8	31.3	-
112/B14	4	5.5	9	130	160	110	12	478.5	28	8	31.3	-
132/B14	4.5	6	11	165	200	130	15	515.5	38	10	41.3	47

x: If Motor is lower than foot mounting plane

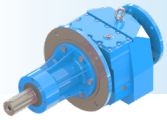

NNB - DIMENSION PAGES

Tapped center hole to DIN 332, sheet 2

NNB275-A..
NNB276-A..

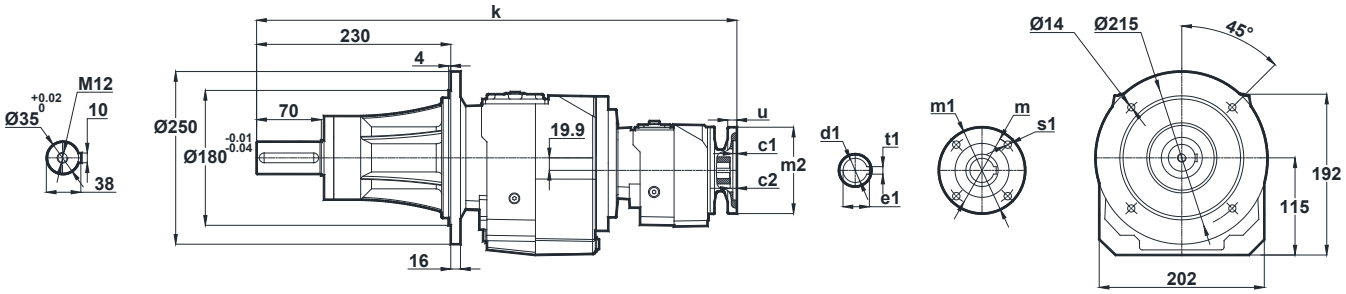

IEC	c1	c2	s1	m	m1	m2	u	k	d1	t1	e1
63/B5	3.5	5	10	115	140	95	10	601	11	4	12.8
71/B5	4	4.5	11	130	160	110	12	602.5	14	5	16.3

NNB275-B..
NNB276-B..

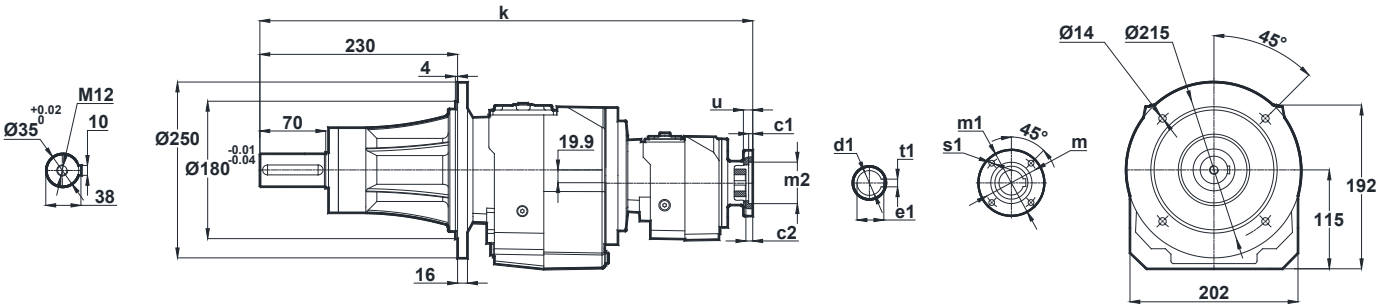

IEC	c1	c2	s1	m	m1	m2	u	k	d1	t1	e1
63/B14	2.5	5	5.5	75	90	60	10	601	11	4	12.8
71/B14	3	4.5	7	85	105	70	10	602.5	14	5	16.3

Tapped center hole to DIN 332, sheet 2

NNB282-A..
NNB283-A..

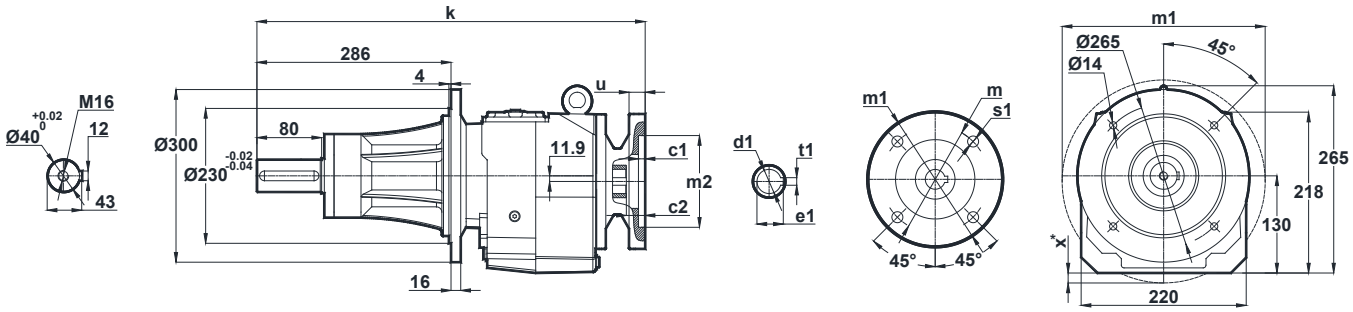

IEC	c1	c2	s1	m	m1	m2	u	k	d1	t1	e1	x
71/B5	4	9	11	130	160	110	12	561.5	14	5	16.3	-
80/B5	4	9	12	165	200	130	12	561.5	19	6	21.8	-
90/B5	4	9	12	165	200	130	12	561.5	24	8	27.3	-
100/B5	4.5	9	15	215	250	180	15	578.5	28	8	31.3	7
112/B5	4.5	9	15	215	250	180	15	578.5	28	8	31.3	7
132/B5	4.5	7	15	265	300	230	15	598.5	38	10	41.3	32

NNB282-B..
NNB283-B..

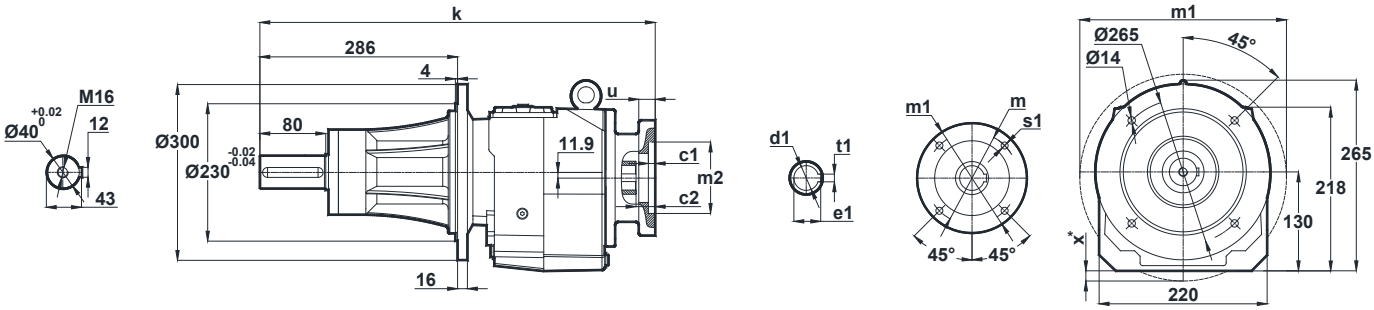

IEC	c1	c2	s1	m	m1	m2	u	k	d1	t1	e1	x
80/B14	4	9	7	100	120	80	12	561.5	19	6	21.8	-
90/B14	4	9	9	115	140	95	12	561.5	24	8	26.3	-
100/B14	4	9	9	130	160	110	15	578.5	28	8	31.3	-
112/B14	4	9	9	130	160	110	15	578.5	28	8	31.3	-
132/B14	4.5	7	11	165	200	130	15	598.5	38	10	41.3	-

x: If Motor is lower than foot mounting plane

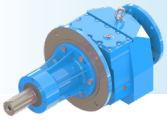

NNB - DIMENSION PAGES

Tapped center hole to DIN 332, sheet 2

NNB284-A..
NNB284-B..

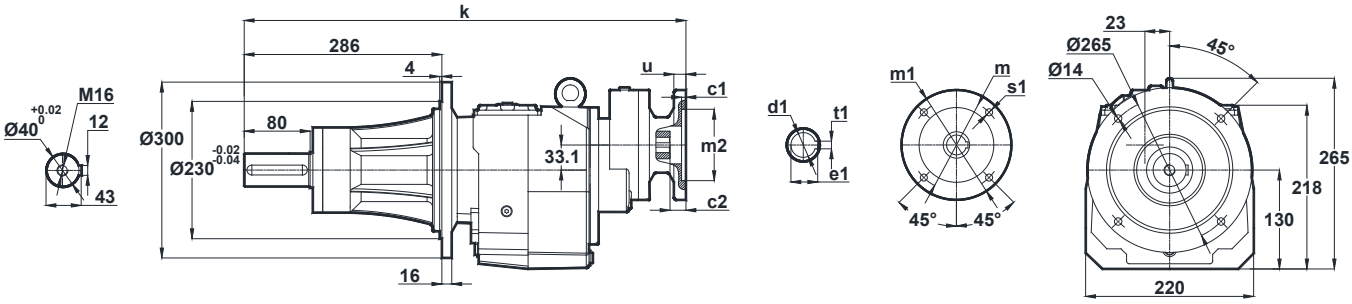

IEC	c1	c2	s1	m	m1	m2	u	k	d1	t1	e1
63/B5	3.5	5	10	115	140	95	10	638.5	11	4	12.8
71/B5	4	4.5	11	130	160	110	12	609.5	14	5	16.3
71/B14	3	4.5	7	85	105	70	10	609.5	14	5	16.3

NNB285-A.. / B..
NNB286-A.. / B..

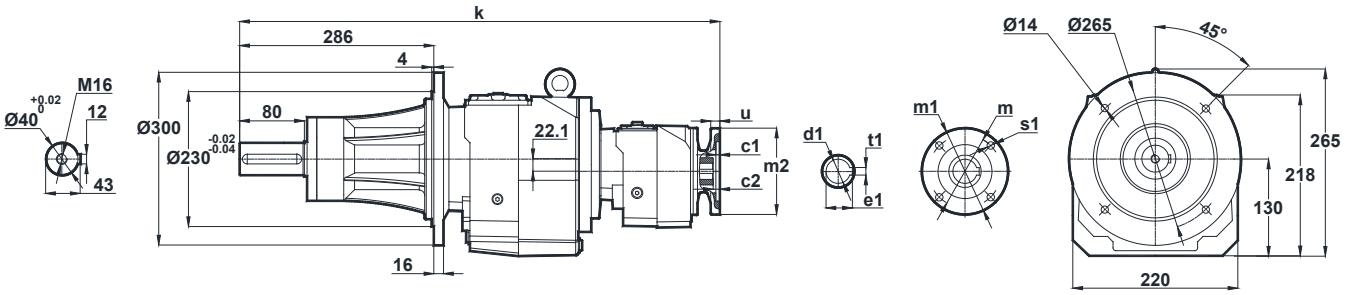

IEC	c1	c2	s1	m	m1	m2	u	k	d1	t1	e1
63/B5	3.5	5	10	115	140	95	12	706.5	11	4	12.8
63/B14	2.5	5	5.5	75	90	60	10	706.5	11	4	12.8

Tapped center hole to DIN 332, sheet 2

NNB372-A..
NNB373-A..

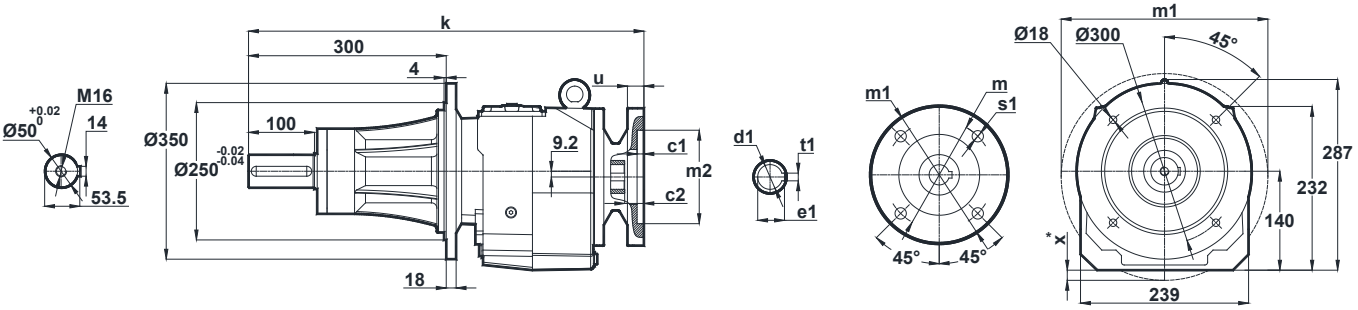

IEC	c1	c2	s1	m	m1	m2	u	k	d1	t1	e1	x
71/B5	4	9	11	130	160	110	12	584	14	5	16.3	-
80/B5	4	9	12	165	200	130	12	584	19	6	21.8	-
90/B5	4	9	12	165	200	130	12	584	24	8	27.3	-
100/B5	4.5	9	15	215	250	180	15	601	28	8	31.3	-
112/B5	4.5	9	15	215	250	180	15	601	28	8	31.3	-
132/B5	4.5	7	15	265	300	230	15	621	38	10	41.3	20

NNB372-B..
NNB373-B..

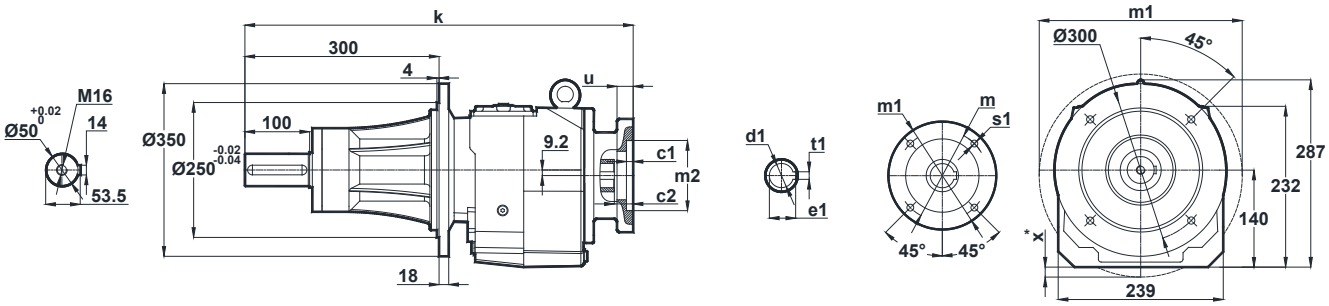

IEC	c1	c2	s1	m	m1	m2	u	k	d1	t1	e1	x
80/B14	4	9	7	100	120	80	12	584	19	6	21.8	-
90/B14	4	9	9	115	140	95	12	584	24	8	26.3	-
100/B14	4	9	9	130	160	110	15	601	28	8	31.3	-
112/B14	4	9	9	130	160	110	15	601	28	8	31.3	-
132/B14	4.5	9	11	165	200	130	15	621	38	10	41.3	-

x: If Motor is lower than foot mounting plane

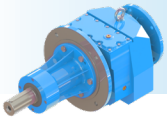

Tapped center hole to DIN 332, sheet 2

NNB374-A..
NNB374-B..

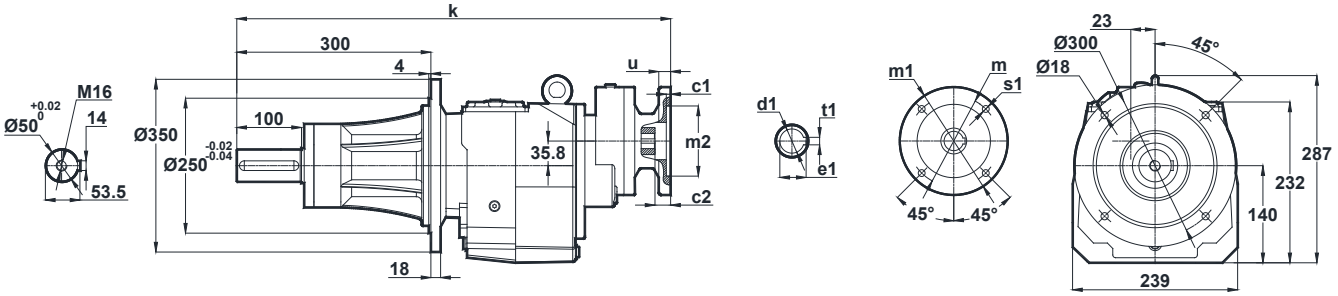

IEC	c1	c2	s1	m	m1	m2	u	k	d1	t1	e1
63/B5	4	5	9	115	140	95	12	661	11	4	12.8
71/B5	4	8.5	11	130	160	110	12	632	14	5	16.3
80/B5	4	5	12	165	200	130	12	661	19	6	21.8
71/B14	3	8.5	7	85	105	70	10	632	14	5	16.3
80/B14	4	5	7	100	120	80	12	661	19	6	21.8

NNB375-A.. / B..
NNB376-A.. / B..

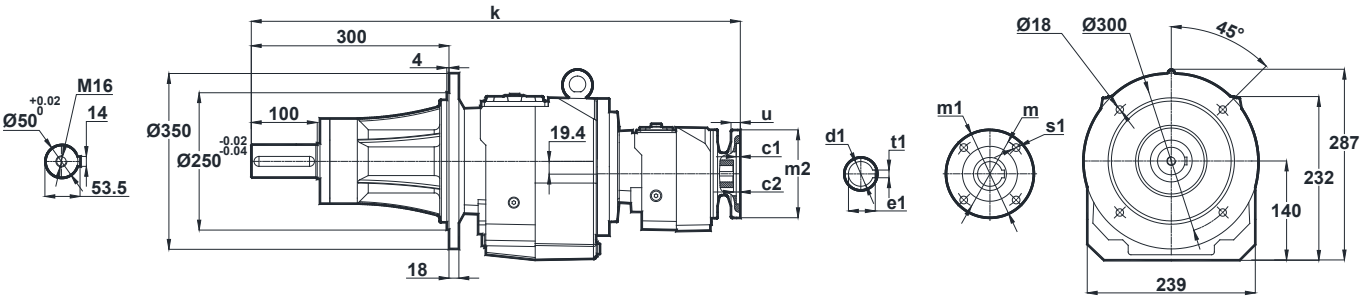

IEC	c1	c2	s1	m	m1	m2	u	k	d1	t1	e1
63/B5	3.5	5	10	115	140	95	10	729	11	4	12.8
63/B14	2.5	5	5.5	75	90	60	10	729	11	4	12.8

Tapped center hole to DIN 332, sheet 2

NNB472-A..
NNB473-A..

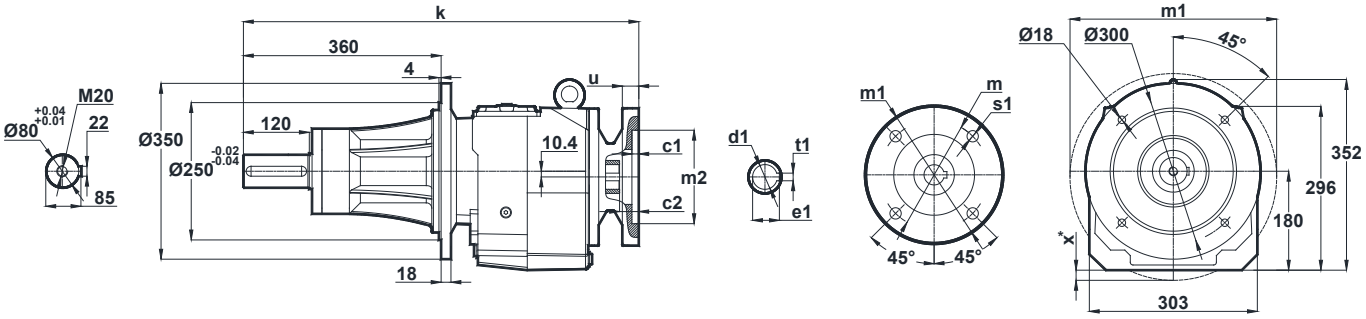

IEC	c1	c2	s1	m	m1	m2	u	k	d1	t1	e1	x
80/B5	4	5	12	165	200	130	12	686.5	19	6	21.8	-
90/B5	4	5	12	165	200	130	12	686.5	24	8	27.3	-
100/B5	4.5	9	15	215	250	180	15	705	28	8	31.3	-
112/B5	4.5	9	15	215	250	180	15	705	28	8	31.3	-
132/B5	4.5	6	15	265	300	230	15	723.5	38	10	41.3	-
160/B5	5.5	10	19	300	350	250	20	803	42	12	45.3	6
180/B5	5.5	10	19	300	350	250	20	803	48	14	51.8	6

NNB472-B..
NNB473-B..

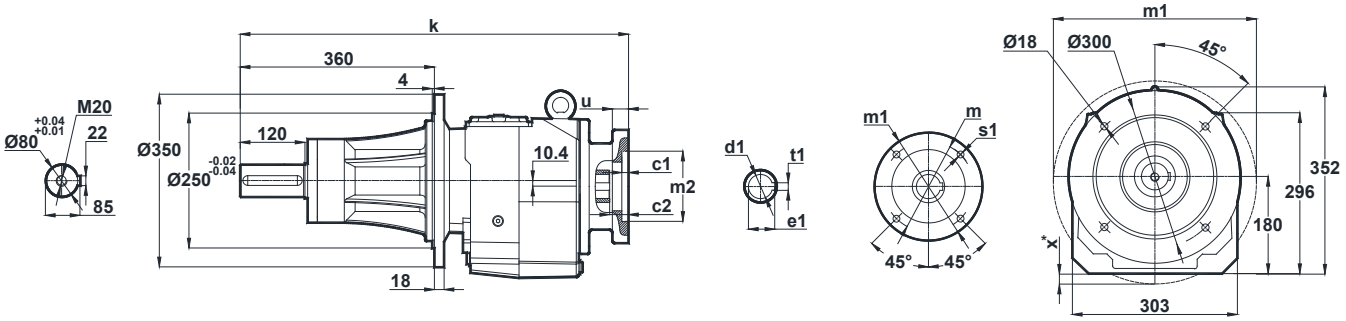

IEC	c1	c2	s1	m	m1	m2	u	k	d1	t1	e1	x
90/B14	4	5	9	115	140	95	12	686.5	24	8	27.3	-
100/B14	4	9	9	130	160	110	15	705	28	8	31.3	-
112/B14	4	9	9	130	160	110	15	705	28	8	31.3	-
132/B14	4.5	6	11	165	200	130	15	723.5	38	10	41.3	-

x: If Motor is lower than foot mounting plane

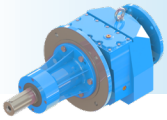

NNB - DIMENSION PAGES

Tapped center hole to DIN 332, sheet 2

NNB474-A..
NNB474-B..

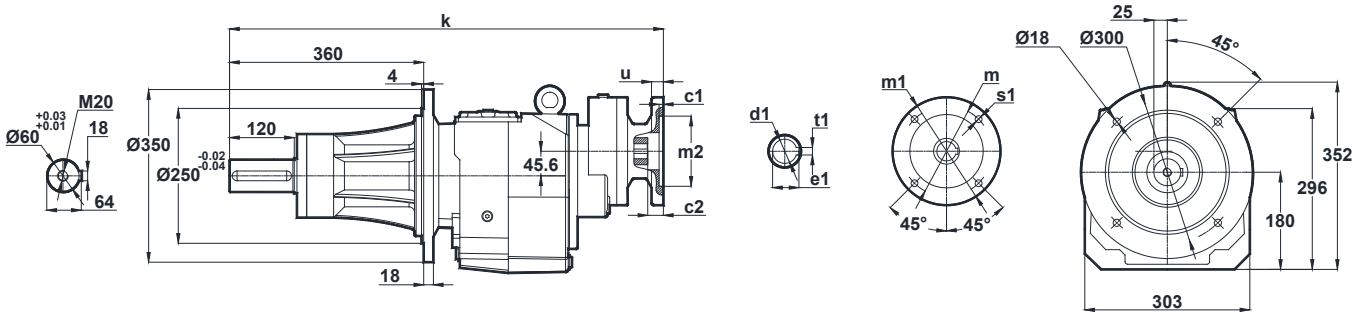

IEC	c1	c2	s1	m	m1	m2	u	k	d1	t1	e1
71/B5	4	9	11	130	160	110	12	784.5	14	5	16.3
80/B5	4	9	12	165	200	130	12	784.5	19	6	21.8
80/B14	4	9	7	100	120	80	12	784.5	19	6	21.8

NNB475-A.. / B..
NNB476-A.. / B..

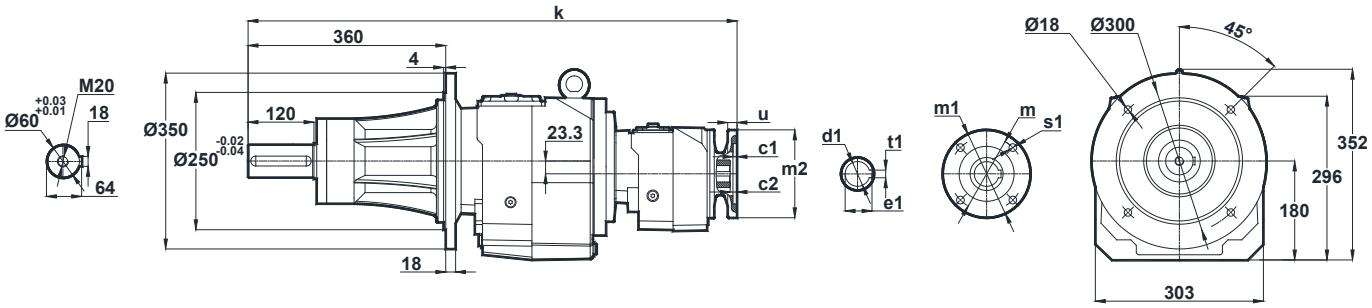

IEC	c1	c2	s1	m	m1	m2	u	k	d1	t1	e1
63/B5	4	5	9	115	140	95	12	912.5	11	4	12.8
71/B5	4	8.5	11	130	160	110	12	883.5	14	5	16.3
71/B14	3	8.5	7	85	105	70	10	883.5	14	5	16.3

Tapped center hole to DIN 332, sheet 2

NNB572-A.. / B..
NNB573-A.. / B..

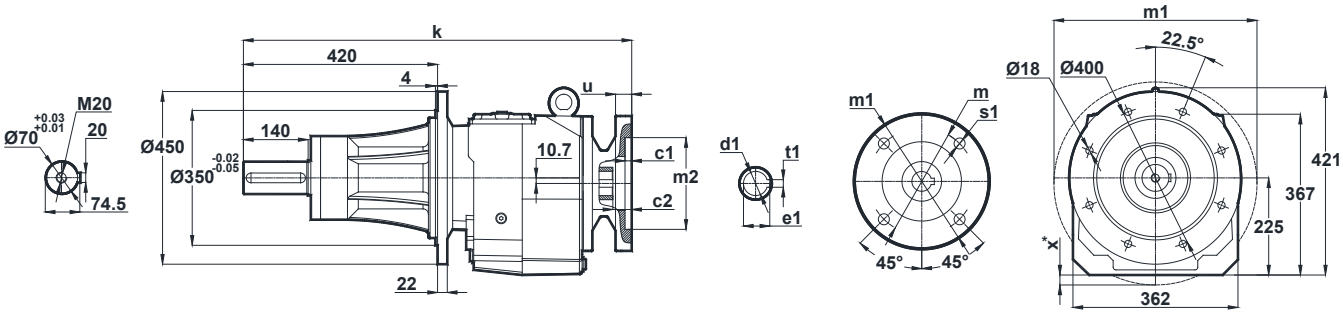

IEC	c1	c2	s1	m	m1	m2	u	k	d1	t1	e1	x
100/B5	4.5	9	15	215	250	180	15	811.5	28	8	31.3	-
112/B5	4.5	9	15	215	250	180	15	811.5	28	8	31.3	-
132/B5	4.5	9	15	265	300	230	15	832.5	38	10	41.3	-
160/B5	5.5	10	19	300	350	250	18	908	42	12	45.3	-
180/B5	5.5	10	19	300	350	250	18	908	48	14	51.8	-
200/B5	5.5	10	19	350	400	300	22	928	55	16	59.3	-
132/B14	4.5	9	11	165	200	130	15	832.5	38	10	41.3	-

NNB574-A..
NNB574-B..

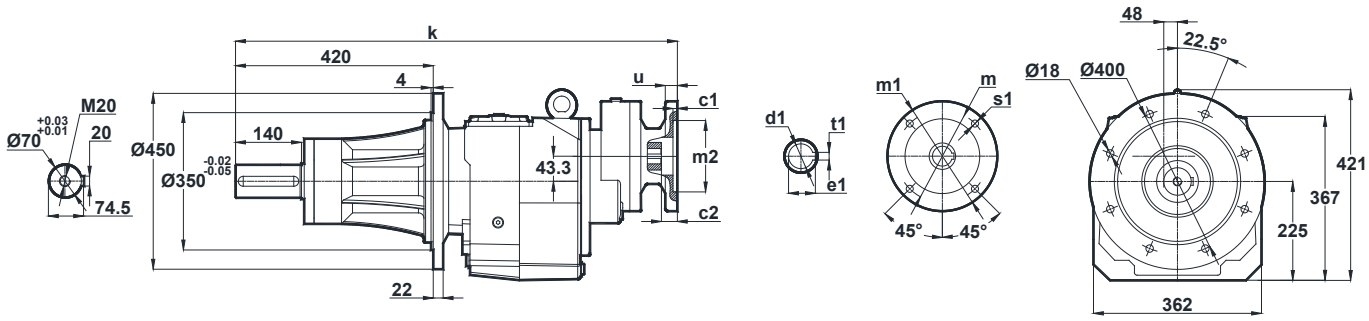

IEC	c1	c2	s1	m	m1	m2	u	k	d1	t1	e1
71/B5	4	9	11	130	160	110	12	891.5	14	5	16.3
80/B5	4	9	12	165	200	130	12	891.5	14	6	21.8
90/B5	4	9	12	165	200	130	12	891.5	19	8	27.3
80/B14	4	9	7	100	120	80	12	891.5	19	6	21.8
90/B14	4	9	9	115	140	95	12	891.5	24	8	26.3

x: If Motor is lower than foot mounting plane

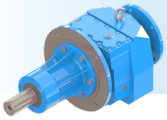

NNB - DIMENSION PAGES

Tapped center hole to DIN 332, sheet 2

NNB575-A.. / B..
NNB576-B.. / B..

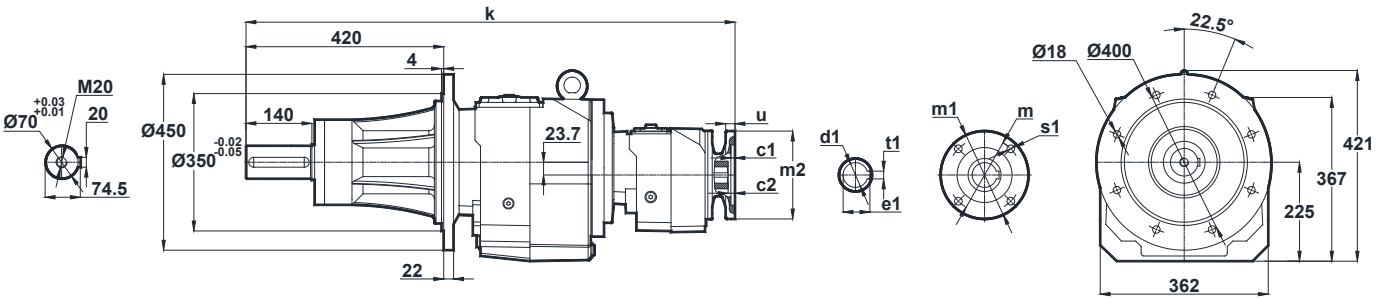

IEC	c1	c2	s1	m	m1	m2	u	k	d1	t1	e1
63/B5	4	5	9	115	140	95	12	1021.5	11	4	12.8
71/B5	4	8.5	11	130	160	110	12	992.5	14	5	16.3
71/B14	3	8.5	7	85	105	70	10	992.5	14	5	16.3

Tapped center hole to DIN 332, sheet 2

NNB672-A.. / B..
NNB673-A.. / B..

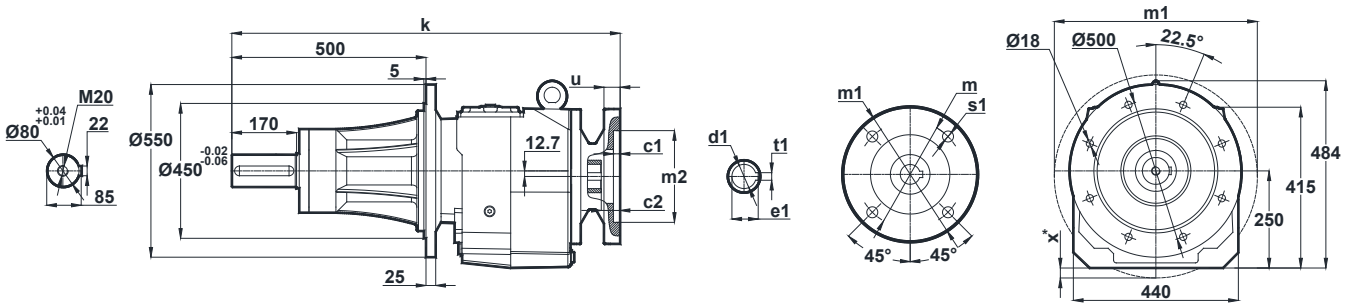

IEC	c1	c2	s1	m	m1	m2	u	k	d1	t1	e1	x
112/B5	4.5	14.5	15	215	250	180	15	932.5	28	8	31.3	-
132/B5	4.5	9	15	265	300	230	15	947.5	38	10	41.3	-
160/B5	5.5	10	19	300	350	250	20	1022.5	42	12	45.3	-
180/B5	5.5	10	19	300	350	250	20	1022.5	48	14	51.8	-
200/B5	5.5	10	19	350	400	300	22	1043	55	16	59.3	-
225/B5	5.5	10	19	400	450	350	24	1096	60	18	64.4	-
132/B14	4.5	9	15	165	200	130	15	947.5	38	10	41.3	-

NNB674-A..
NNB674-B..

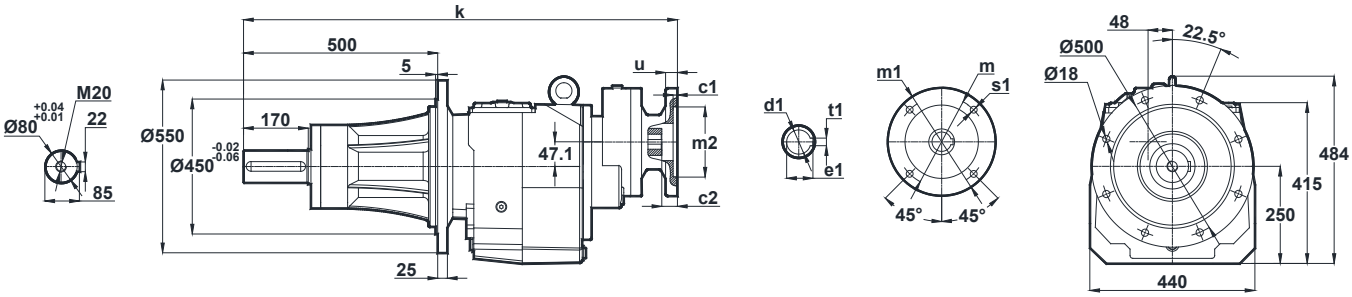

IEC	c1	c2	s1	m	m1	m2	u	k	d1	t1	e1
80/B5	4	5	12	165	200	130	12	1022.5	19	6	21.8
90/B5	4	5	12	165	200	130	12	1022.5	24	8	27.3
90/B14	4	5	9	115	140	95	12	1022.5	24	8	27.3

x: If Motor is lower than foot mounting plane

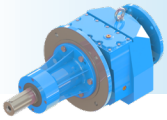

NNB - DIMENSION PAGES

Tapped center hole to DIN 332, sheet 2

NNB675-A.. / B..
NNB676-B.. / B..

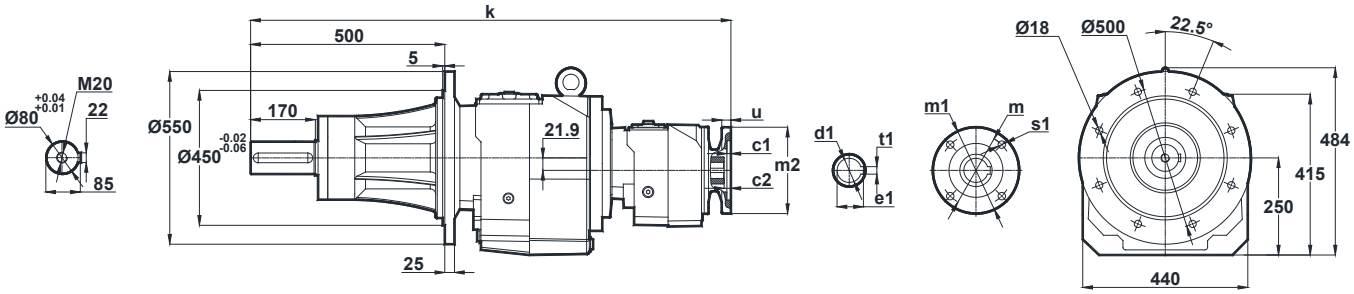

IEC	c1	c2	s1	m	m1	m2	u	k	d1	t1	e1
71/B5	4	9	11	130	160	110	12	1173	14	5	16.3
80/B5	4	9	12	165	200	130	12	1173	19	6	21.8
80/B14	4	9	7	100	120	80	12	1173	19	6	21.8

Tapped center hole to DIN 332, sheet 2

NNB772-A..
NNB773-A..

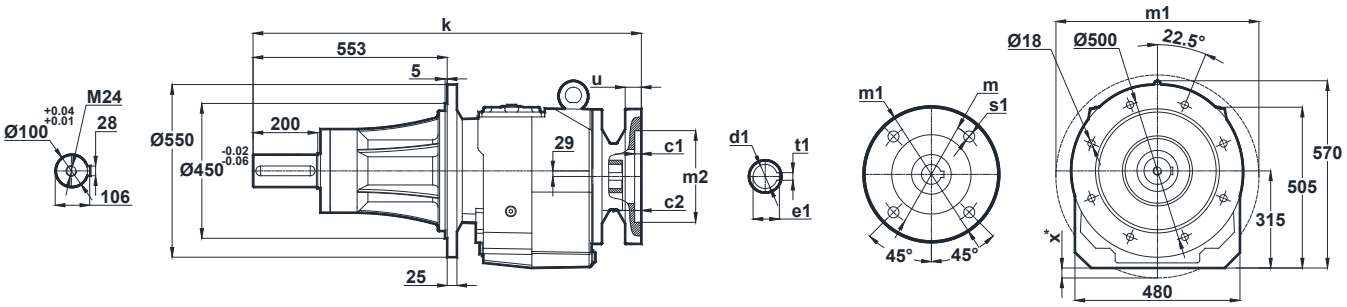

IEC	c1	c2	s1	m	m1	m2	u	k	d1	t1	e1	x
132/B5	4.5	15	15	265	300	230	15	1050.5	38	10	41.3	-
160/B5	5.5	10	19	300	350	250	20	1120	42	12	45.3	-
180/B5	5.5	10	19	300	350	250	20	1120	43	14	51.8	-
200/B5	5.5	10	19	350	400	300	20	1142	55	16	59.3	-
225/B5	5.5	10	19	400	450	350	24	1195	60	18	64.4	-
250/B5	5.5	10	19	500	550	450	24	1195	65	18	69.4	-

NNB774-A..
NNB774-B..

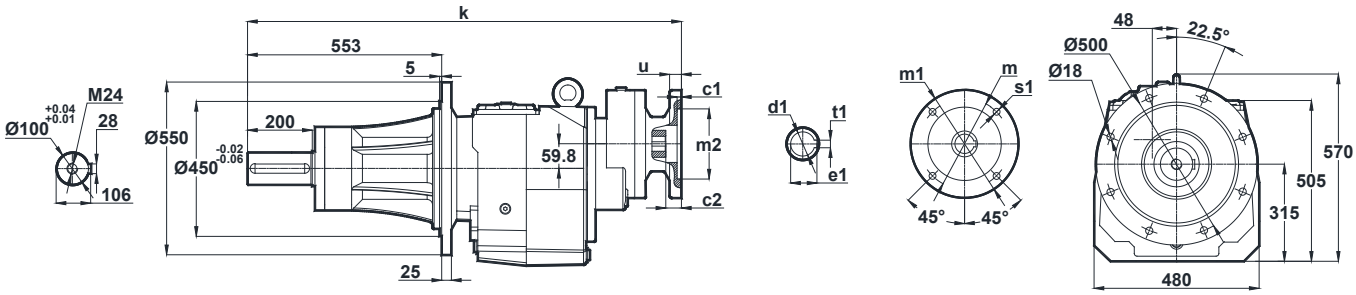

IEC	c1	c2	s1	m	m1	m2	u	k	d1	t1	e1
80/B5	4	5	12	165	200	130	12	1125.5	19	6	21.8
90/B5	4	5	12	165	200	130	12	1125.5	24	8	27.3
100/B5	4.5	9	15	215	250	180	15	1144	28	8	31.3
90/B14	4	5	9	115	140	95	12	1125.5	24	8	27.3
100/B14	4	9	9	130	160	110	15	1144	28	8	31.3

x: If Motor is lower than foot mounting plane

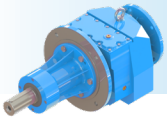

NNB - DIMENSION PAGES

Tapped center hole to DIN 332, sheet 2

NNB775-A.. / B..
NNB776-B.. / B..

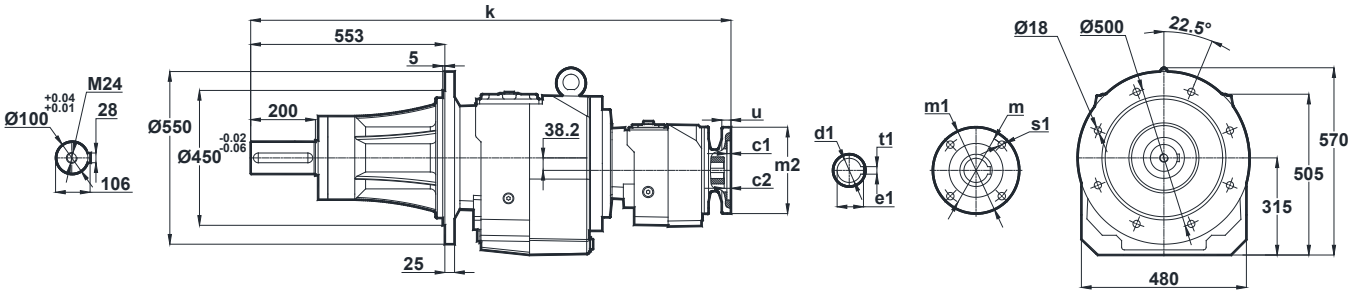

IEC	c1	c2	s1	m	m1	m2	u	k	d1	t1	e1
71/B5	4	9	11	130	160	110	12	1279	14	5	16.3
80/B5	4	9	12	165	200	130	12	1279	19	6	21.8
90/B5	4	9	12	165	200	130	12	1279	24	8	27.3
80/B14	4	9	7	100	120	80	12	1279	19	6	21.8
90/B14	4	9	9	115	140	95	12	1279	24	8	26.3

Tapped center hole to DIN 332, sheet 2

NNB872-A..
NNB873-A..

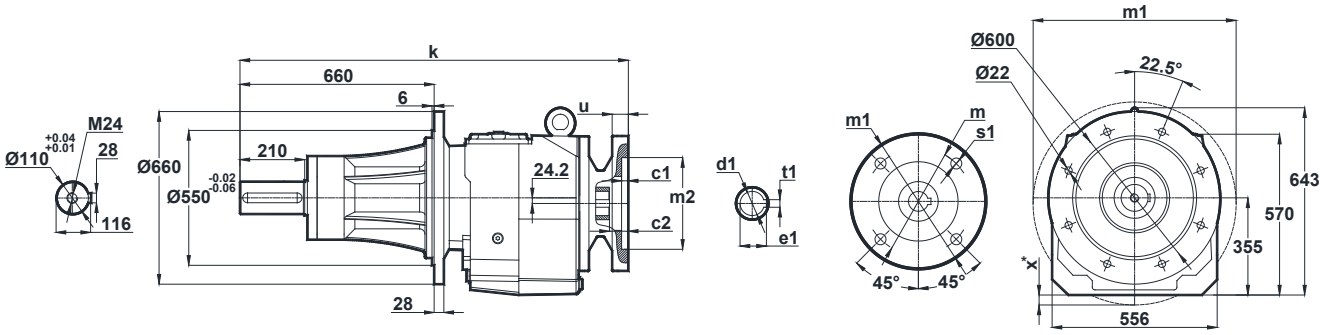

IEC	c1	c2	s1	m	m1	m2	u	k	d1	t1	e1	x
160/B5	5.5	10	19	300	350	250	20	1373	42	12	45.3	-
180/B5	5.5	10	19	300	350	250	20	1373	48	14	51.8	-
200/B5	5.5	10	19	350	400	300	22	1373	55	16	59.3	-
225/B5	5.5	10	19	400	450	350	24	1373	60	18	64.4	-
250/B5	5.5	10	19	500	550	450	24	1373	65	18	69.4	-
280/B5	5.5	10	19	500	550	450	24	1373	75	20	79.9	-

NNB874-A..
NNB874-B..

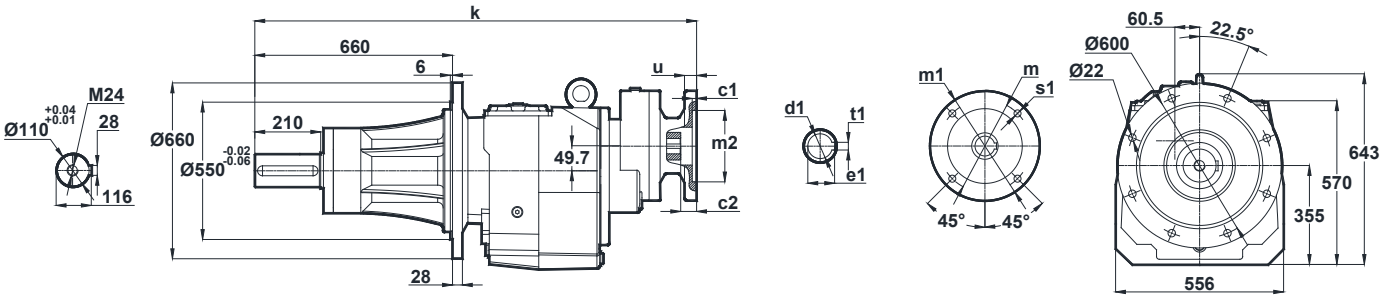

IEC	c1	c2	s1	m	m1	m2	u	k	d1	t1	e1
100/B5	4.5	9	15	215	250	180	15	1345.5	28	8	31.3
112/B5	4.5	9	15	215	250	180	15	1345.5	28	8	31.3
132/B5	4.5	9	15	265	300	230	15	1366.5	38	10	41.3
132/B14	4.5	9	11	165	200	130	15	1366.5	38	10	41.3

x: If Motor is lower than foot mounting plane

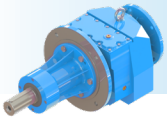

NNB - DIMENSION PAGES

Tapped center hole to DIN 332, sheet 2

NNB875-A.. / B..
NNB876-B.. / B..

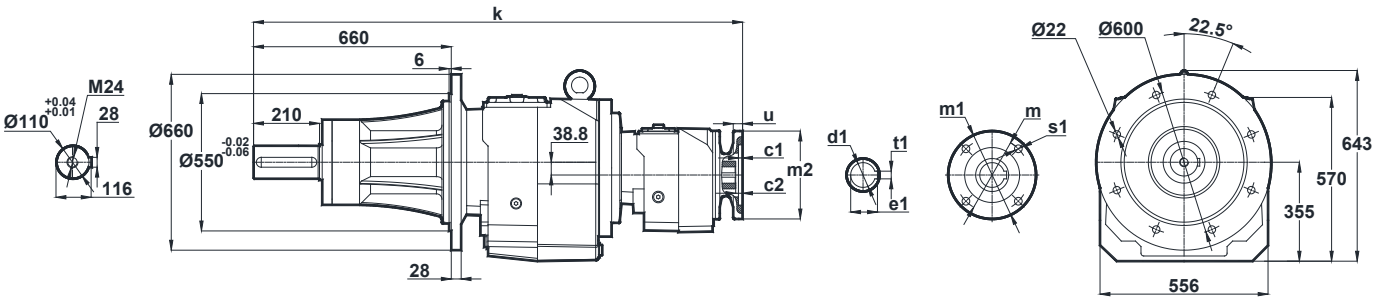

IEC	c1	c2	s1	m	m1	m2	u	k	d1	t1	e1
71/B5	4	9	11	130	160	110	12	1463	14	5	16.3
80/B5	4	9	12	165	200	130	12	1463	19	6	21.8
90/B5	4	9	12	165	200	130	12	1463	24	8	27.3
100/B5	4.5	9	15	215	250	180	15	1480	28	8	31.3
80/B14	4	9	7	100	120	80	12	1463	19	8	21.8
90/B14	4	9	9	115	140	95	12	1463	24	8	26.3
100/B14	4	9	9	130	160	110	15	1480	28	8	31.3

Tapped center hole to DIN 332, sheet 2

NNB972-A..
NNB973-A..

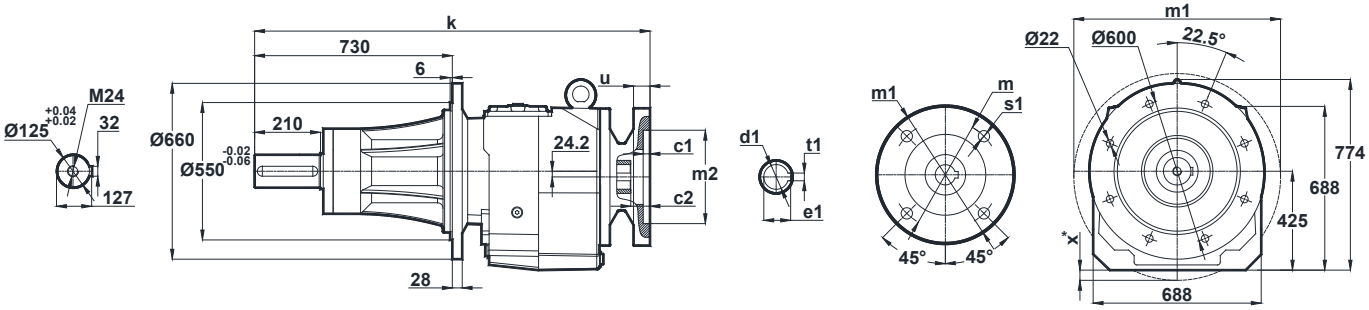

IEC	c1	c2	s1	m	m1	m2	u	k	d1	t1	e1	x
160/B5	5.5	10	19	300	350	250	20	1430.5	42	12	45.3	-
180/B5	5.5	10	19	300	350	250	20	1430.5	48	14	51.8	-
200/B5	5.5	10	19	350	400	300	22	1454.5	55	16	59.3	-
225/B5	5.5	10	19	400	450	350	24	1496.5	60	18	64.4	-
250/B5	5.5	10	19	500	550	450	24	1518.5	65	18	69.4	-
280/B5	5.5	10	19	500	550	450	24	1518.5	75	20	79.9	-
315/B5	6.5	15	24	660	600	550	24	1598.5	85	22	90.4	-

NNB974-A..
NNB974-B..

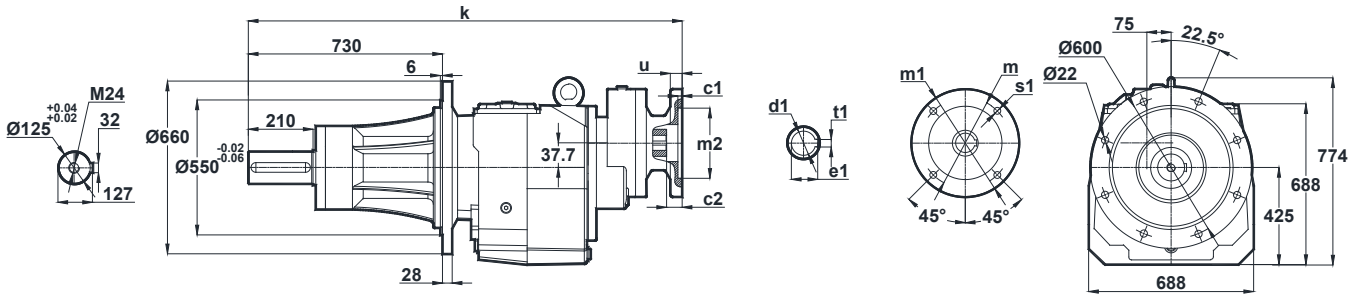

IEC	c1	c2	s1	m	m1	m2	u	k	d1	t1	e1
100/B5	4.5	14.5	15	215	250	180	15	1519	28	8	31.3
112/B5	4.5	14.5	15	215	250	180	15	1519	28	8	31.3
132/B5	4.5	9	15	265	300	230	15	1534	38	10	41.3
132/B14	4.5	9	15	165	200	130	15	1534	38	10	41.3

x: If Motor is lower than foot mounting plane

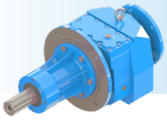

NNB - DIMENSION PAGES

Tapped center hole to DIN 332, sheet 2

NNB975-A.. / B..
NNB976-B.. / B..

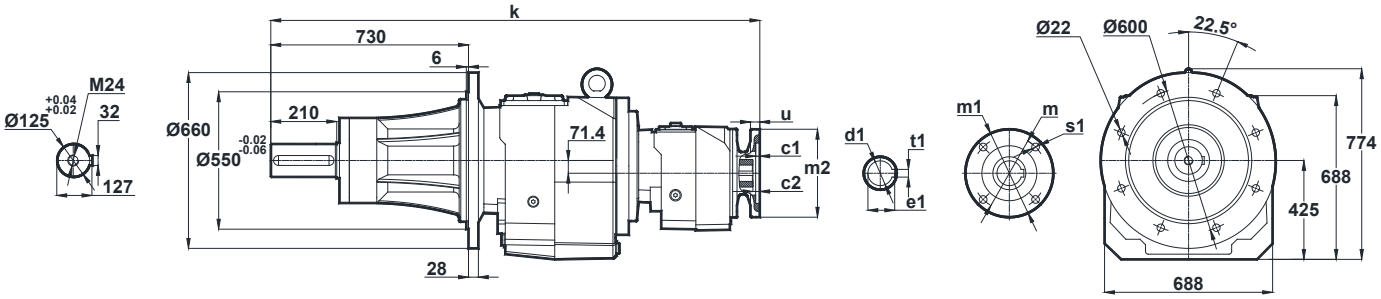

IEC	c1	c2	s1	m	m1	m2	u	k	d1	t1	e1
80/B5	4	5	12	165	200	130	12	1655	19	6	12.8
90/B5	4	5	12	165	200	130	12	1655	24	8	27.3
100/B5	4.5	9	15	215	250	180	15	1673.5	28	8	31.3
112/B5	4.5	9	15	215	250	180	15	1673.5	28	8	31.3
132/B5	4.5	6	15	265	300	230	15	1692	38	10	41.3
90/B14	4	5	9	115	140	95	12	1655	24	8	27.3
100/B14	4	9	9	130	160	110	15	1673.5	28	8	31.3
112/B14	4	9	9	130	160	110	15	1673.5	28	8	31.3
132/B14	4.5	6	11	165	200	130	15	1692	38	10	41.3

DANA BREVINI®
Motion Systems

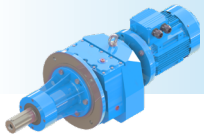

NVB - DIMENSION PAGES

Tapped center hole to DIN 332, sheet 2

NVB202
NVB203

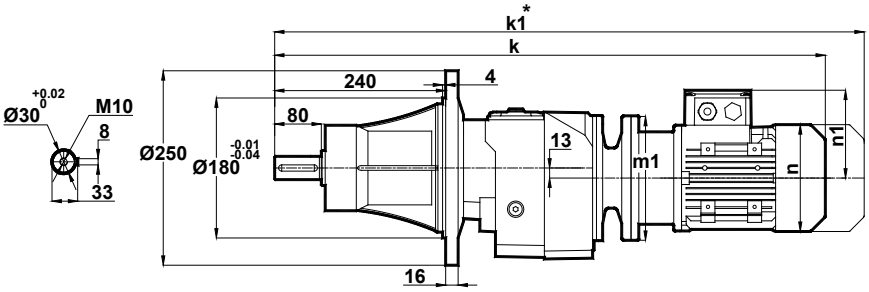

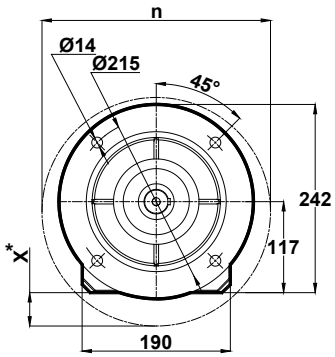

Motor Size							
IEC	63/B5	71/B5 71/B14	80/B5 80/B14	90S/B5 90S/B14	90L/B5 90L/B14	100L/B5 100L/B14	112M/B5 112M/B14
k	680.5	669.5	721.5	762.5	762.5	791	811.5
k1	741.5	760.5	814.5	866	866	899.5	916
n / n1	121 / 97	137 / 112	155 / 121	176 / 132	176 / 132	193 / 147	215 / 158
m1 (B5)	140	160	200	200	200	250	250
m1 (B14)	-	105	120	140	140	160	160
x (B5)	-	-	-	-	-	23	23

Terminal Box

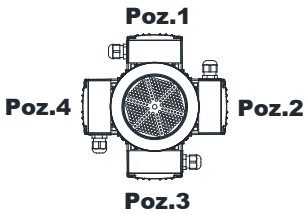

63-71-80-90-100-112

* Dimension " k1" is for motors with brake.
x: If Motor is lower than foot mounting plane

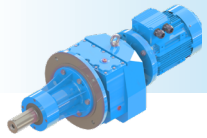

Tapped center hole to DIN 332, sheet 2

NVB272
NVB273

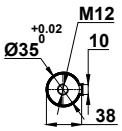

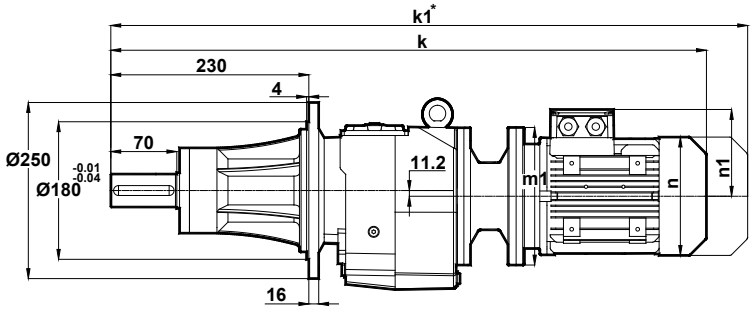

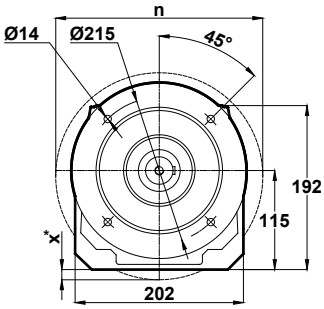

IEC	63/B5 63/B14	71/B5 71/B14	80/B5 80/B14	90S/B5 90S/B14	90L/B5 90L/B14
k	678.5	667.5	719.5	760.5	760.5
k1	739.5	758.5	812.5	864	864
n / n1	121 / 97	137 / 112	155 / 121	176 / 132	176 / 132
m1 (B5)	140	160	200	200	200
m1 (B14)	90	105	120	140	140
x (B5)	-	1	21	21	21

Terminal Box

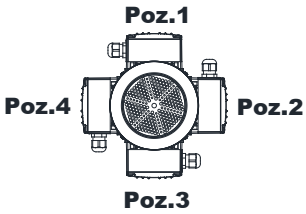

63-71-80-90

NVB275
NVB276

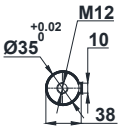

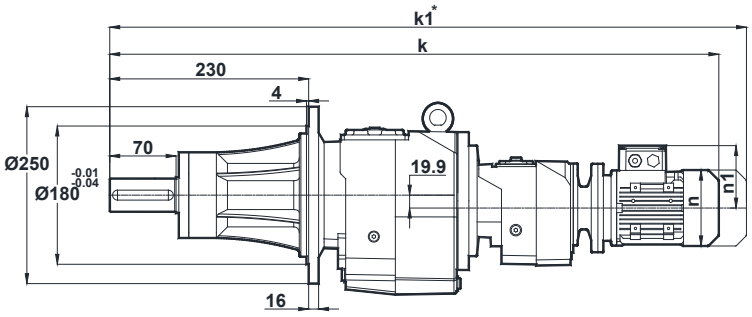

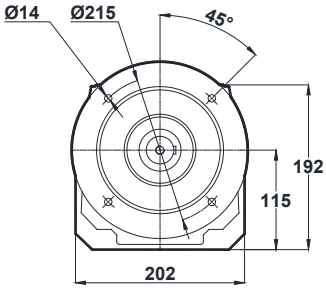

Motor Size		
IEC	63/B5 63/B14	71/B5 71/B14
k	794	813.5
k1	855	904.5
n / n1	121 / 97	137 / 112
m1 (B5)	140	160
m1 (B14)	90	105

Terminal Box

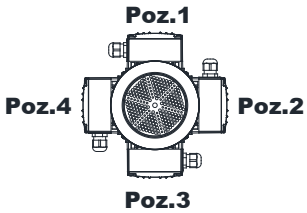

63-71

* Dimension " k1" is for motors with brake.
x: If Motor is lower than foot mounting plane

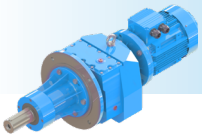

NVB - DIMENSION PAGES

Tapped center hole to DIN 332, sheet 2

NVB282
NVB283

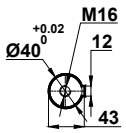

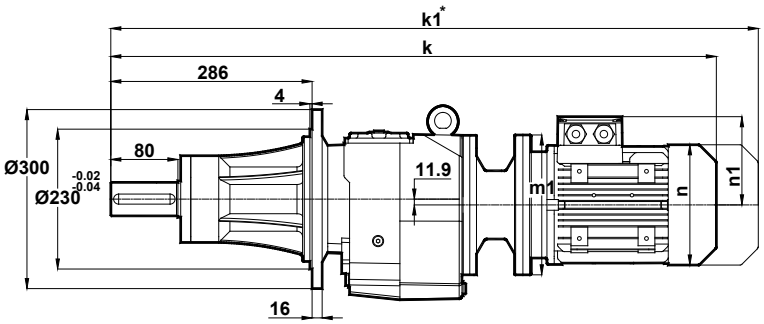

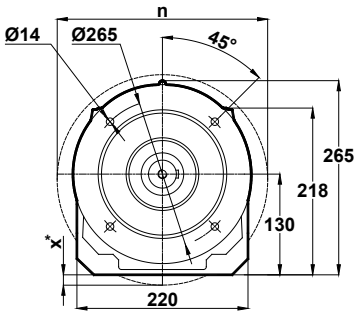

Motor Size								
IEC	71/B5	80/B5 80/B14	90S/B5 90S/B14	90L/B5 90L/B14	100L/B5 100L/B14	112M/B5 112M/B14	132S/B5 132S/B14	132M/B5 132M/B14
k	772.5	795.5	836.5	836.5	889	909.5	1013.5	1013.5
k1	863.5	888.5	940	940	997.5	1014	1143.5	1143.5
n / n1	137 / 112	155 / 121	176 / 132	176 / 132	193 / 147	215 / 158	257 / 179	257 / 179
m1 (B5)	160	200	200	200	250	250	300	300
m1 (B14)	-	120	140	140	160	160	200	200
x (B5)	-	-	-	-	7	7	32	32

Terminal Box

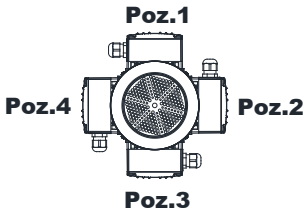

71-80-90-100-112-132

NVB284

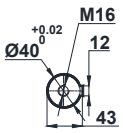

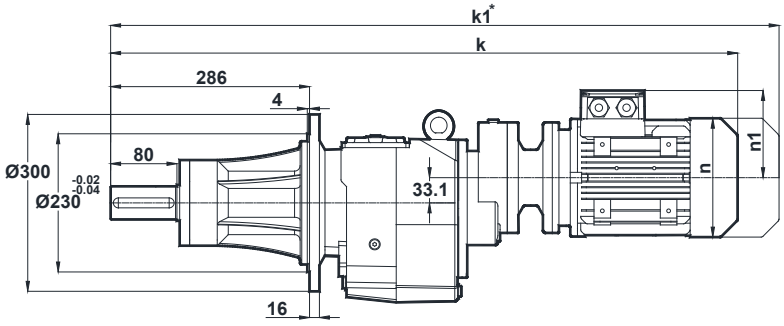

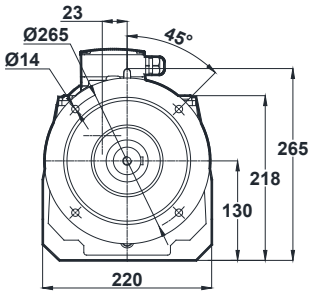

Motor Size		
IEC	63/B5	71/B5 71/B14
k	831.5	820.5
k1	892.5	911.5
n / n1	121 / 97	137 / 112
m1 (B5)	140	160
m1 (B14)	-	105

Terminal Box

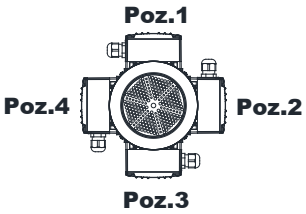

63-71

* Dimension " k1" is for motors with brake.
x: If Motor is lower than foot mounting plane

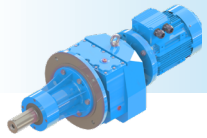

Tapped center hole to DIN 332, sheet 2

NVB285
NVB286

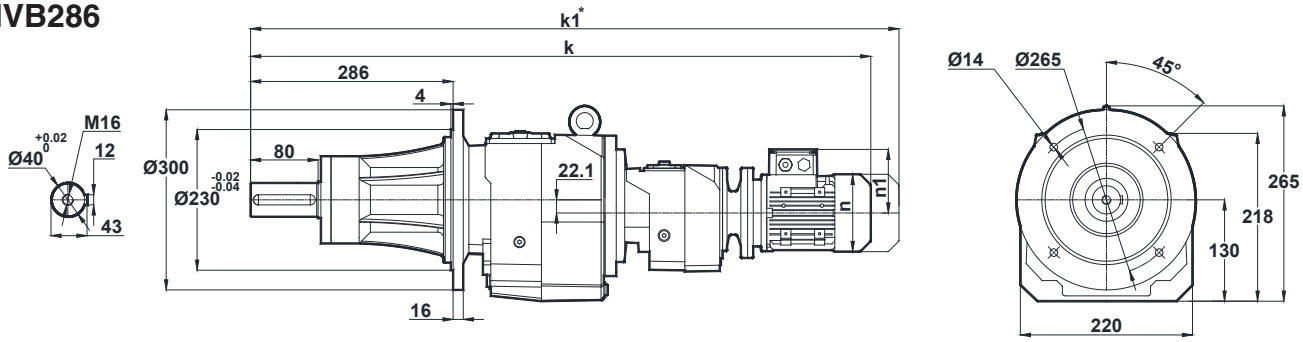

Motor Size	
IEC	63/B5 63/B14
k	899.5
k1	960.5
n / n1	121 / 97
m1 (B5)	140
m1 (B14)	90

Terminal Box

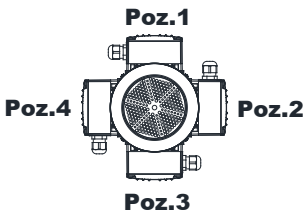

63

* Dimension " k1" is for motors with brake.

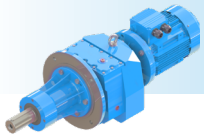

NVB - DIMENSION PAGES

Tapped center hole to DIN 332, sheet 2

NVB372
NVB373

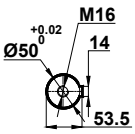

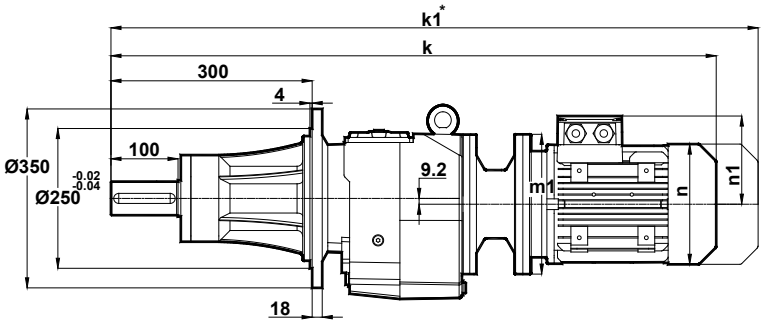

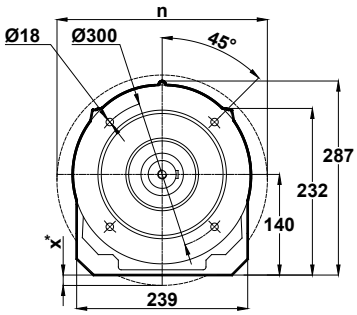

Motor Size								
IEC	71/B5	80/B5 80/B14	90S/B5 90S/B14	90L/B5 90L/B14	100L/B5 100L/B14	112M/B5 112M/B14	132S/B5 132S/B14	132M/B5 132M/B14
k	795	818	859	859	911.5	932	1036	1036
k1	886	911	962.5	962.5	1020	1036.5	1166	1166
n / n1	137 / 112	155 / 121	176 / 132	176 / 132	193 / 147	215 / 158	257 / 179	257 / 179
m1 (B5)	160	200	200	200	250	250	300	300
m1 (B14)	-	120	140	140	160	160	200	200
x (B5)	-	-	-	-	-	-	20	20

Terminal Box

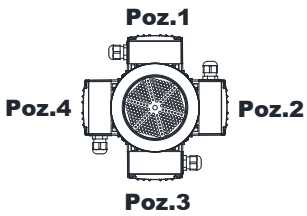

71-80-90-100-112-132

NVB374

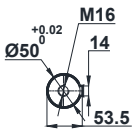

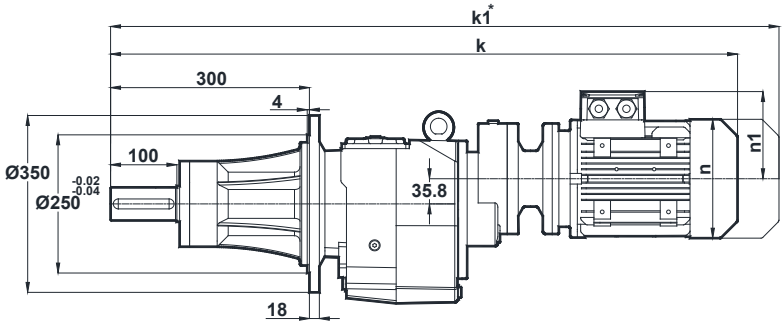

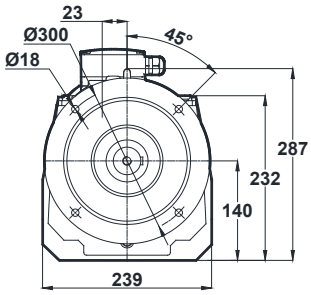

Motor Size			
IEC	63/B5	71/B5 71/B14	80/B5 80/B14
k	854	843	895
k1	915	934	988
n / n1	121 / 97	137 / 112	155 / 121
m1 (B5)	140	160	200
m1 (B14)	-	105	120

Terminal Box

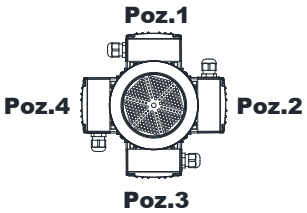

63-71-80

* Dimension " k1" is for motors with brake.
x: If Motor is lower than foot mounting plane

Tapped center hole to DIN 332, sheet 2

NVB375
NVB376

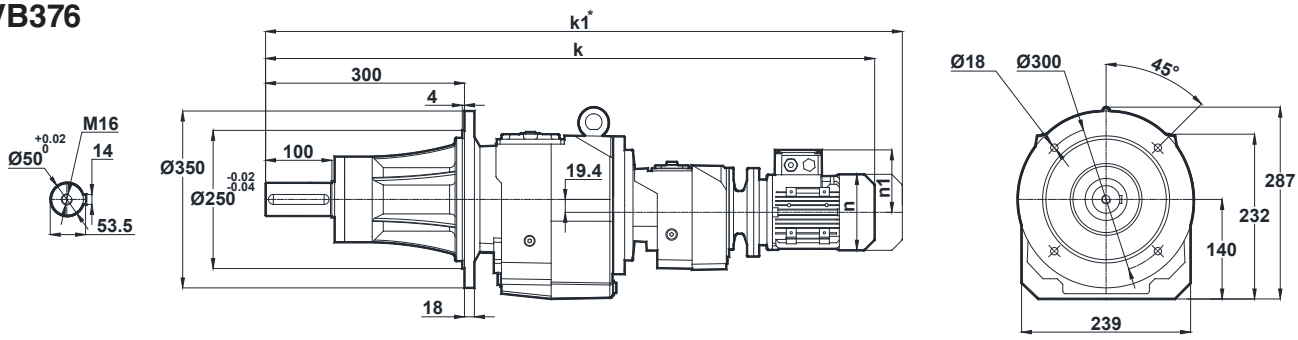

Motor Size	
IEC	63/B5 63/B14
k	922
k1	983
n / n1	121 / 97
m1 (B5)	140
m1 (B14)	90

Terminal Box

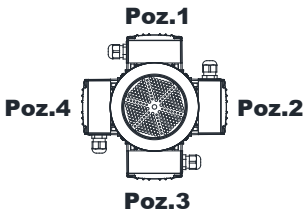

63

* Dimension " k1" is for motors with brake.

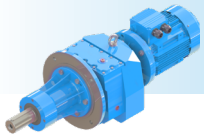

NVB - DIMENSION PAGES

Tapped center hole to DIN 332, sheet 2

NVB472
NVB473

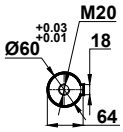

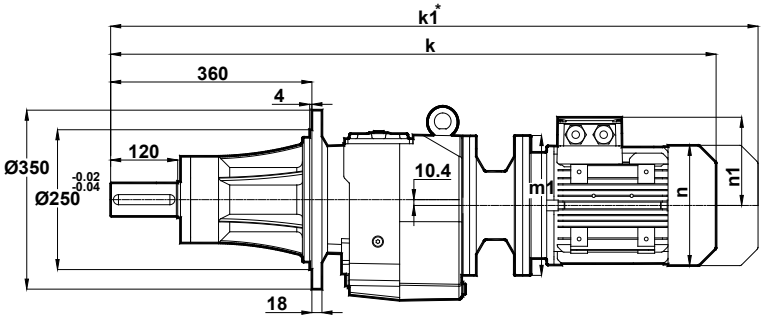

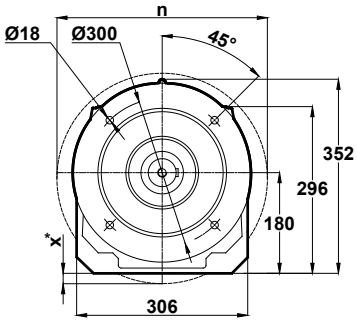

Motor Size											
IEC	80/B5	90S/B5 90S/B14	90L/B5 90L/B14	100L/B5 100L/B14	112M/B5 112M/B14	132S/B5 132S/B14	132M/B5 132M/B14	160M/B5	160L/B5	180M/B5	180L/B5
k	920.5	961.5	961.5	1015.5	1036	1138.5	1138.5	1298	1298	1386	1386
k1	1013.5	1065	1065	1124	1140.5	1268.5	1268.5	1446	1446	1544.5	1544.5
n / n1	155 / 121	176 / 132	176 / 132	193 / 147	215 / 158	257 / 179	257 / 179	315 / 219	315 / 219	347 / 234	347 / 234
m1 (B5)	200	200	200	250	250	300	300	350	350	350	350
m1 (B14)	-	140	140	160	160	200	200	-	-	-	-
x (B5)	-	-	-	-	-	-	-	6	6	6	6

Terminal Box

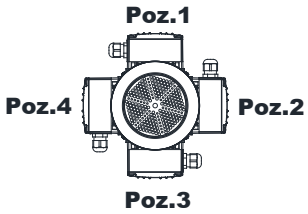

80-90-100-112-132-160-180

NVB474

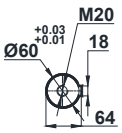

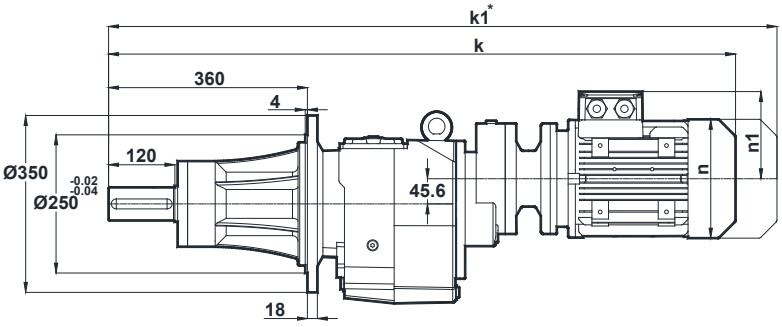

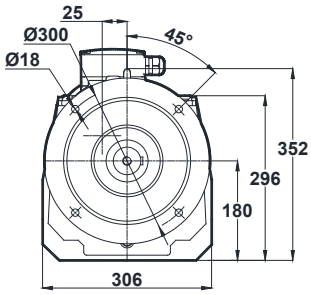

Motor Size		
IEC	71/B5	80/B5 80/B14
k	995.5	1018.5
k1	1086.5	1111.5
n / n1	137 / 112	155 / 121
m1 (B5)	160	200
m1 (B14)	-	120

Terminal Box

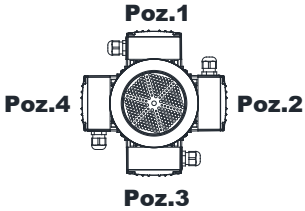

71-80

* Dimension " k1" is for motors with brake.
x: If Motor is lower than foot mounting plane

Tapped center hole to DIN 332, sheet 2

NVB475
NVB476

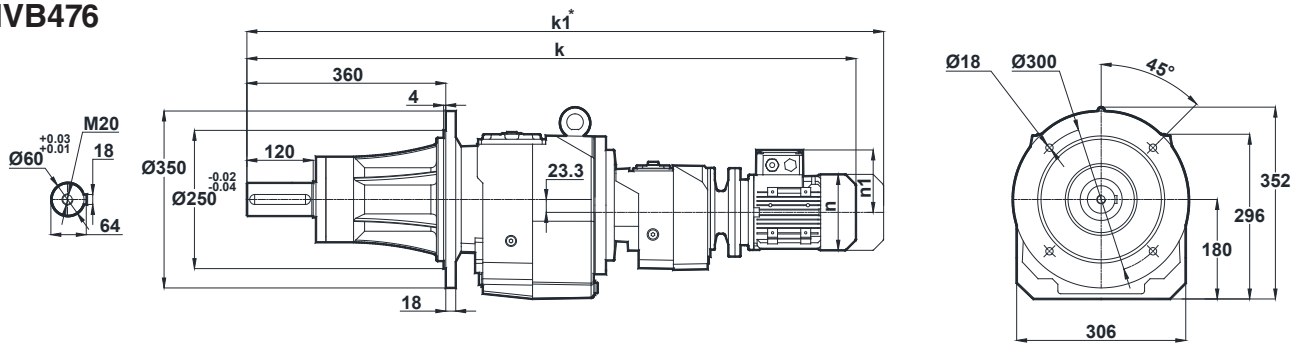

Motor Size		
IEC	63/B5	71/B5 71/B14
k	1105.5	1094.5
k1	1166.5	1185.5
n / n1	121 / 97	137 / 112
m1 (B5)	140	160
m1 (B14)	-	105

Terminal Box

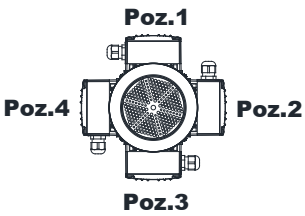

63-71

* Dimension " k1" is for motors with brake.

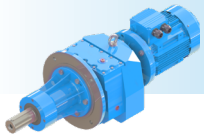

NVB - DIMENSION PAGES

Tapped center hole to DIN 332, sheet 2

NVB572
NVB573

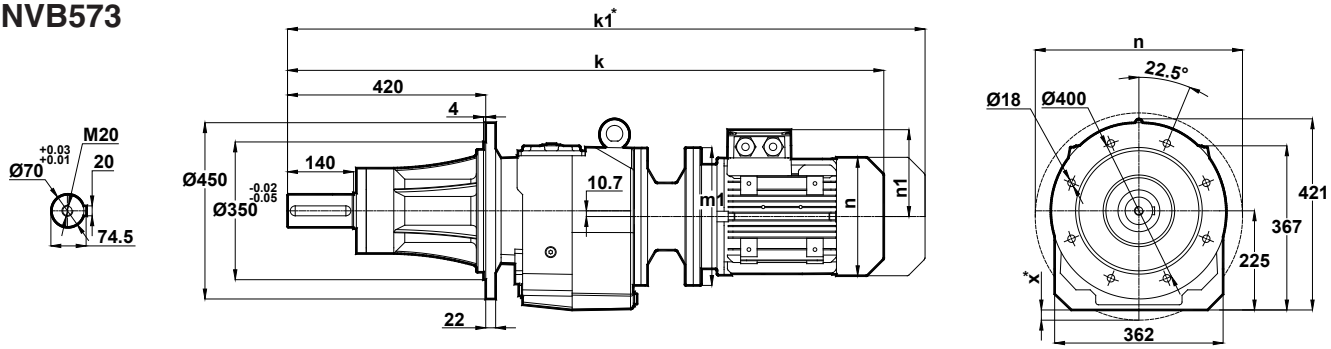

Motor Size									
IEC	100L/B5	112M/B5	132S/B5 132S/B14	132M/B5 132M/B14	160M/B5	160L/B5	180M/B5	180L/B5	200L/B5
k	1122	1142.5	1247.5	1247.5	1403	1403	1491	1491	1565
k1	1230.5	1247	1377.5	1377.5	1551	1551	1649.5	1649.5	1751.5
n / n1	194 / 135	218 / 146	257 / 168	257 / 168	310 / 225	310 / 225	348 / 241	348 / 241	390 / 275
m1 (B5)	250	250	300	300	350	350	350	350	400
m1 (B14)	-	-	200	200	-	-	-	-	-
x (B5)	-	-	-	-	-	-	-	-	-

Terminal Box

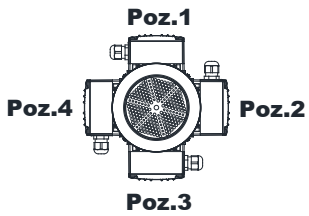

100-112-132-160-180-200

NVB574

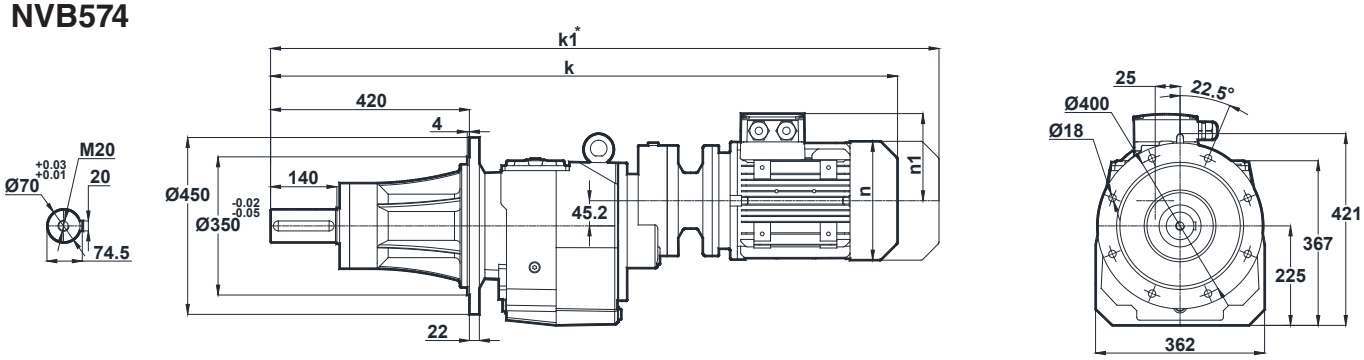

Motor Size				
IEC	71/B5	80/B5 80/B14	90S/B5 90S/B14	90L/B5 90L/B14
k	1102.5	1125.5	1166.5	1166.5
k1	1193.5	1218.5	1270	1270
n / n1	138 / 111	156 / 118	176 / 126	176 / 126
m1 (B5)	160	200	200	200
m1 (B14)	-	120	140	140

Terminal Box

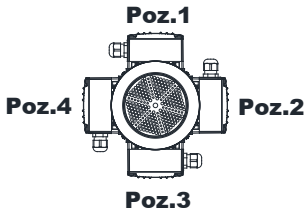

71-80-90

* Dimension " k1" is for motors with brake.
x: If Motor is lower than foot mounting plane

Tapped center hole to DIN 332, sheet 2

NVB575
NVB576

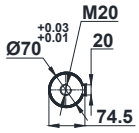

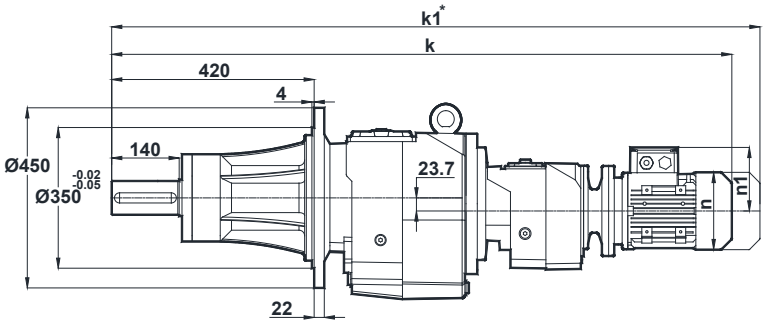

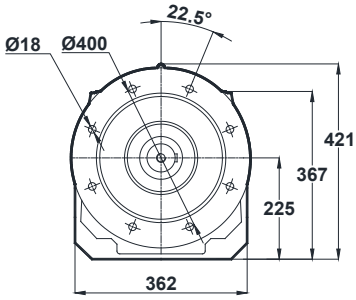

Motor Size		
IEC	63/B5	71/B5 71/B14
k	1214.5	1203.5
k1	1275.5	1294.5
n / n1	121 / 97	138 / 111
m1 (B5)	140	160
m1 (B14)	-	105

Terminal Box

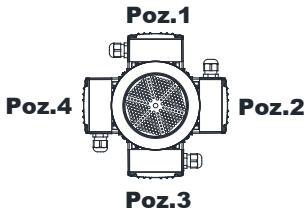

63-71

* Dimension " k1" is for motors with brake.

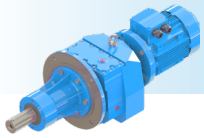

NVB - DIMENSION PAGES

Tapped center hole to DIN 332, sheet 2

NVB672
NVB673

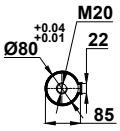

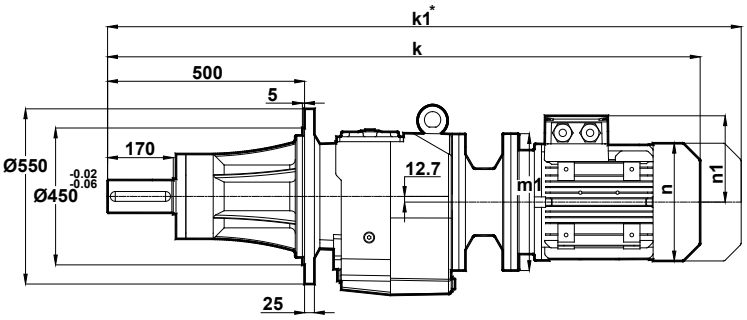

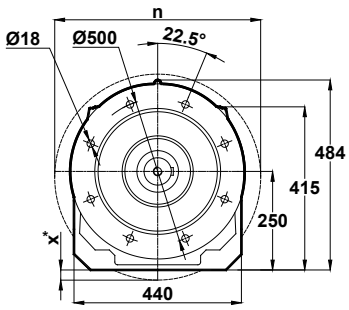

Motor Size										
IEC	112M/B5	132S/B5 132S/B14	132M/B5 132M/B14	160M/B5	160L/B5	180M/B5	180L/B5	200L/B5	225S/B5	225M/B5
k	1263.5	1362.5	1362.5	1517.5	1517.5	1605.5	1605.5	1680	1751	1776
k1	1368	1492.5	1492.5	1665.5	1665.5	1764	1764	1866.5	1916	1941
n / n1	215 / 158	257 / 179	257 / 179	315 / 219	315 / 219	347 / 234	347 / 234	390 / 275	434 / 285	434 / 285
m1 (B5)	250	300	300	350	350	350	350	400	450	450
m1 (B14)	-	200	200	-	-	-	-	-	-	-
x (B5)	-	-	-	-	-	-	-	-	-	-

Terminal Box

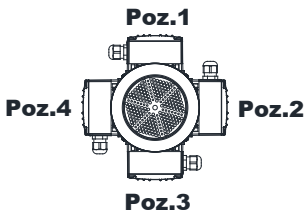

112-132-160-180-200-225

NVB674

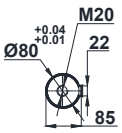

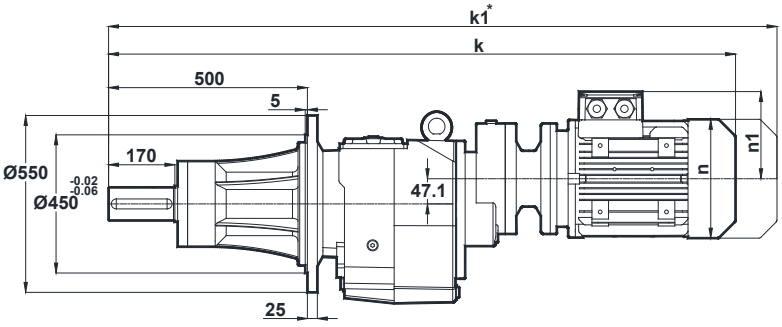

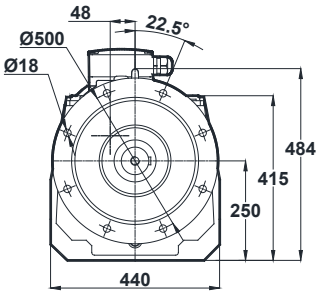

Motor Size			
IEC	80/B5	90S/B5 90S/B14	90L/B5 90L/B14
k	1256.5	1297.5	1297.5
k1	1349.5	1401	1401
n / n1	156 / 118	176 / 126	176 / 126
m1 (B5)	200	200	200
m1 (B14)	-	140	140

Terminal Box

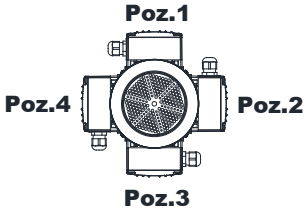

80-90

* Dimension " k1" is for motors with brake.
x: If Motor is lower than foot mounting plane

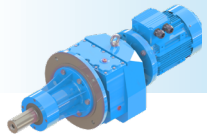

Tapped center hole to DIN 332, sheet 2

NVB675
NVB676

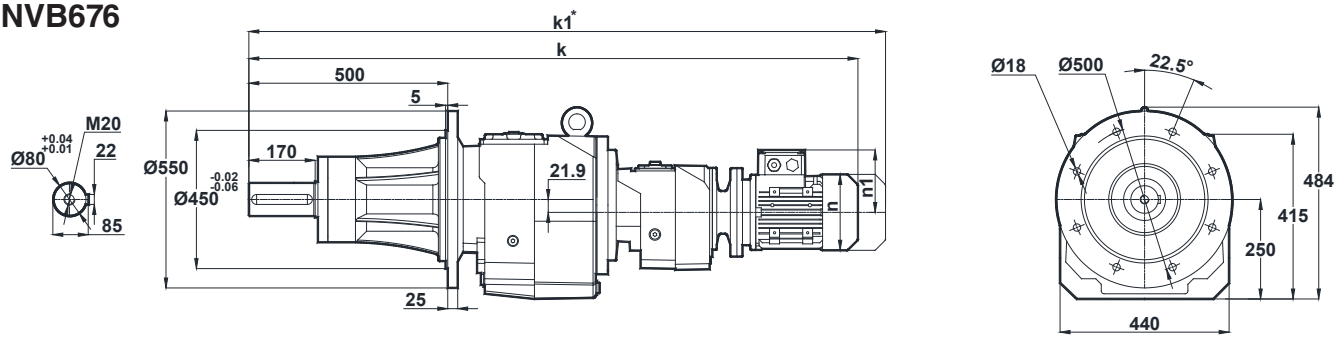

Motor Size		
IEC	71/B5	80/B5 80/B14
k	1384	1407
k1	1475	1500
n / n1	137 / 112	155 / 121
m1 (B5)	160	200
m1 (B14)	-	120

Terminal Box

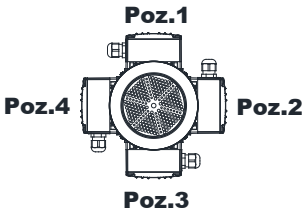

71-80

* Dimension " k1" is for motors with brake.

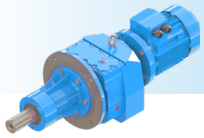

NVB - DIMENSION PAGES

Tapped center hole to DIN 332, sheet 2

NVB772
NVB773

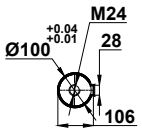

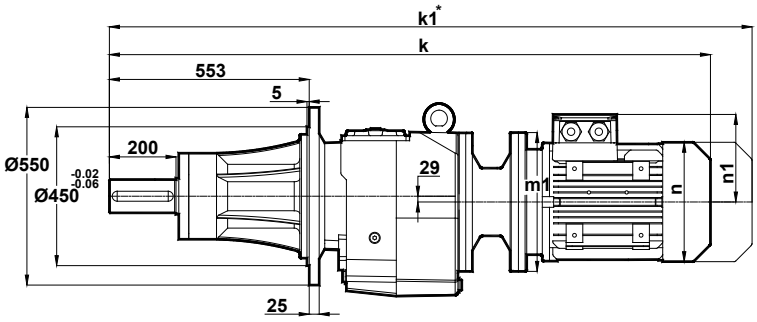

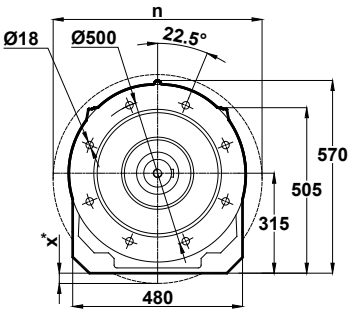

Motor Size										
IEC	132S/B5	132M/B5	160M/B5	160L/B5	180M/B5	180L/B5	200L/B5	225S/B5	225M/B5	250M/B5
k	1465.5	1465.5	1615	1615	1703	1703	1779	1850	1875	1951
k1	1595.5	1595.5	1763	1763	1861.5	1861.5	1965.5	2015	2040	2121.5
n / n1	257 / 179	257 / 179	315 / 219	315 / 219	347 / 234	347 / 234	390 / 275	434 / 285	434 / 285	480 / 322
m1 (B5)	300	300	350	350	350	350	400	450	450	550
m1 (B14)	-	-	-	-	-	-	-	-	-	-
x (B5)	-	-	-	-	-	-	-	-	-	-

Terminal Box

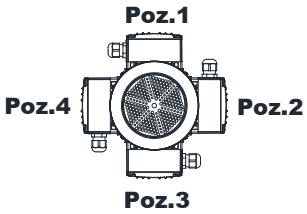

132-160-180-200-225-250

NVB774

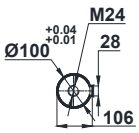

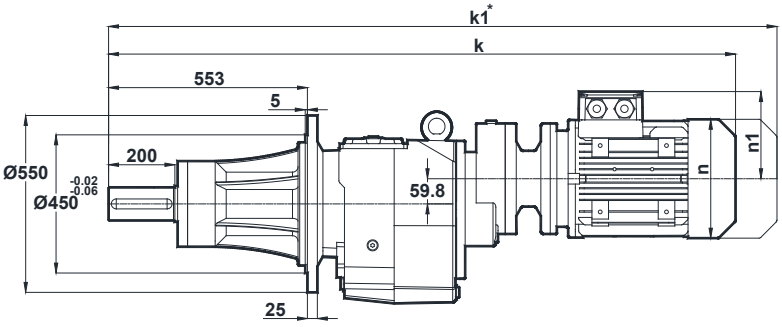

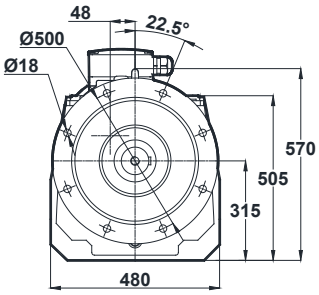

Motor Size				
IEC	80/B5	90S/B5 90S/B14	90L/B5 90L/B14	100L/B5 100L/B14
k	1359.5	1400.5	1400.5	1454.5
k1	1452.5	1504	1504	1563
n / n1	156 / 118	176 / 126	176 / 126	193 / 147
m1 (B5)	200	200	200	250
m1 (B14)	-	140	140	160

Terminal Box

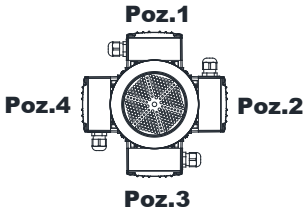

80-90-100

* Dimension " k1" is for motors with brake.
x: If Motor is lower than foot mounting plane

Tapped center hole to DIN 332, sheet 2

NVB775
NVB776

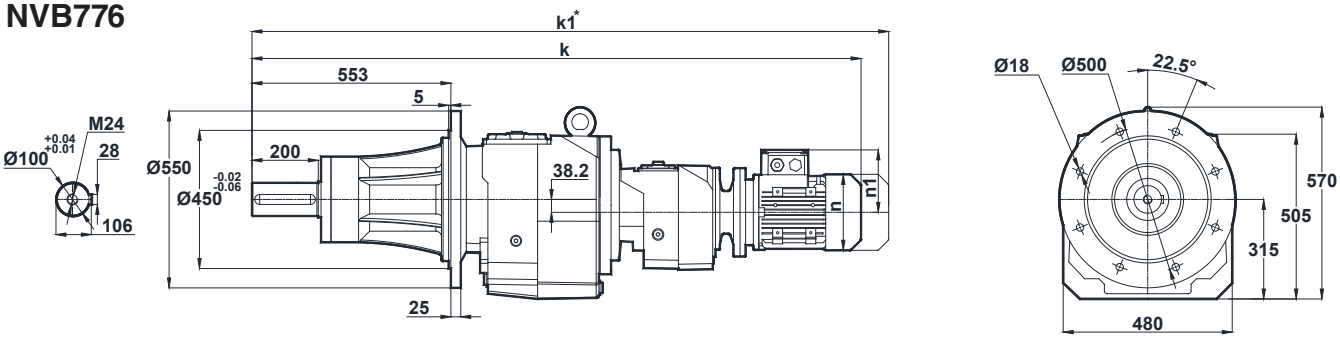

Motor Size				
IEC	71/B5	80/B5 80/B14	90S/B5 90S/B14	90L/B5 90L/B14
k	1490	1513	1554	1554
k1	1581	1606	1657.5	1657.5
n / n1	138 / 111	156 / 118	176 / 126	176 / 126
m1 (B5)	160	200	200	200
m1 (B14)	-	120	140	140

Terminal Box

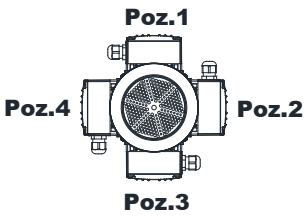

71-80-90

* Dimension " k1" is for motors with brake.

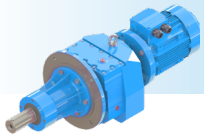

NVB - DIMENSION PAGES

Tapped center hole to DIN 332, sheet 2

NVB872
NVB873

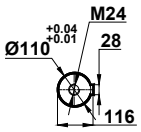

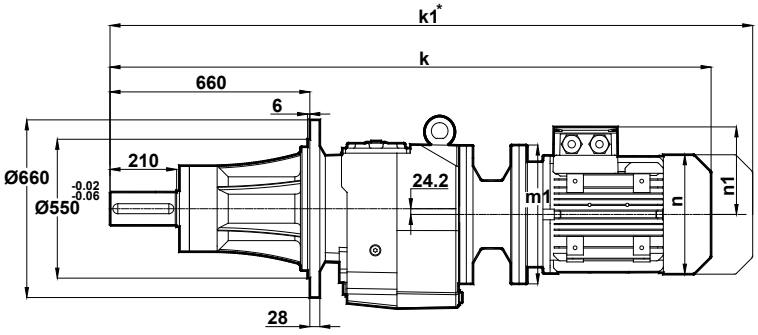

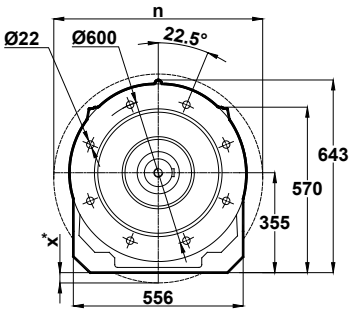

Motor Size										
IEC	160M/B5	160L/B5	180M/B5	180L/B5	200L/B5	225S/B5	225M/B5	250M/B5	280S/B5	280M/B5
k	1868	1868	1956	1956	2010	2028	2053	2129	2191	2191
k1	2016	2016	2114.5	2114.5	2196.5	2193	2218	2299.5	2364	2370
n / n1	315 / 219	315 / 219	347 / 234	347 / 234	390 / 275	434 / 285	434 / 285	480 / 322	544 / 350	544 / 350
m1 (B5)	350	350	350	350	400	450	450	550	550	550
m1 (B14)	-	-	-	-	-	-	-	-	-	-
x (B5)	-	-	-	-	-	-	-	-	-	-

Terminal Box

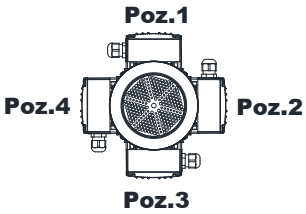

160-180-200-225-250-280

NVB874

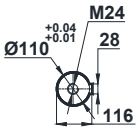

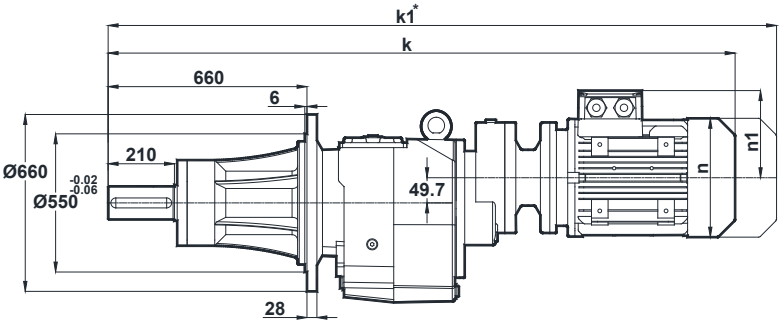

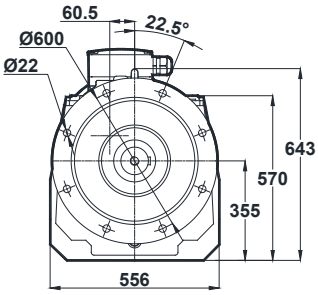

Motor Size				
IEC	100L/B5	112M/B5	132S/B5 132S/B14	132M/B5 132M/B14
k	1656	1676.5	1781.5	1781.5
k1	1764.5	1781	1911.5	1911.5
n / n1	193 / 147	215 / 158	257 / 179	257 / 179
m1 (B5)	250	250	300	300
m1 (B14)	-	-	200	200

Terminal Box

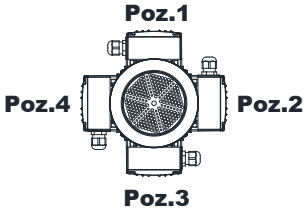

100-112-132

* Dimension " k1" is for motors with brake.
x: If Motor is lower than foot mounting plane

Tapped center hole to DIN 332, sheet 2

NVB875
NVB876

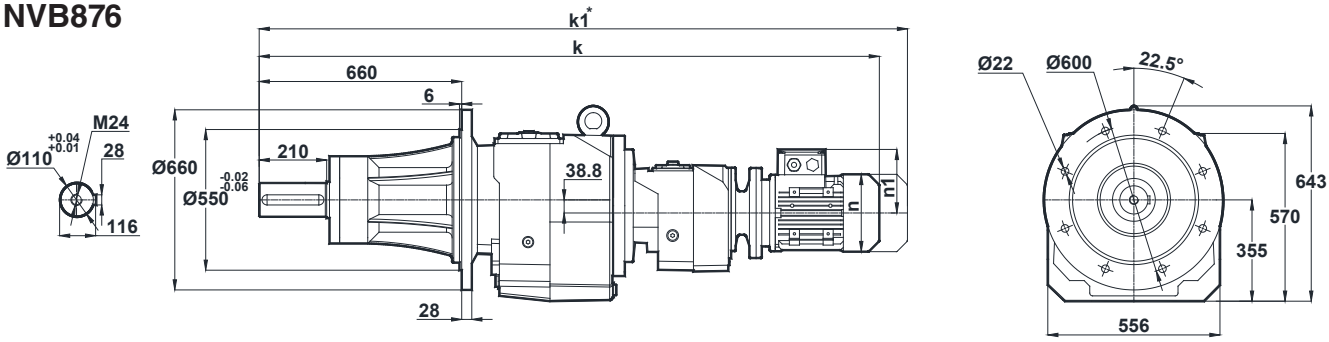

Motor Size					
IEC	71/B5	80/B5 80/B14	90S/B5 90S/B14	90L/B5 90L/B14	100L/B5 100L/B14
k	1674	1697	1738	1738	1790.5
k1	1765	1790	1841.5	1841.5	1899
n / n1	137 / 112	155 / 121	176 / 132	176 / 132	193 / 147
m1 (B5)	160	200	200	200	250
m1 (B14)	-	120	140	140	160

Terminal Box

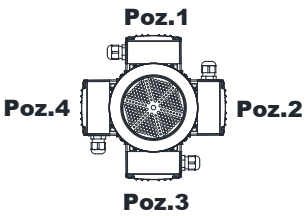

71-80-90-100

* Dimension " k1" is for motors with brake.

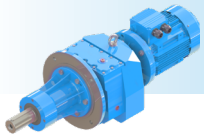

NVB - DIMENSION PAGES

Tapped center hole to DIN 332, sheet 2

NVB972
NVB973

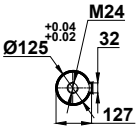

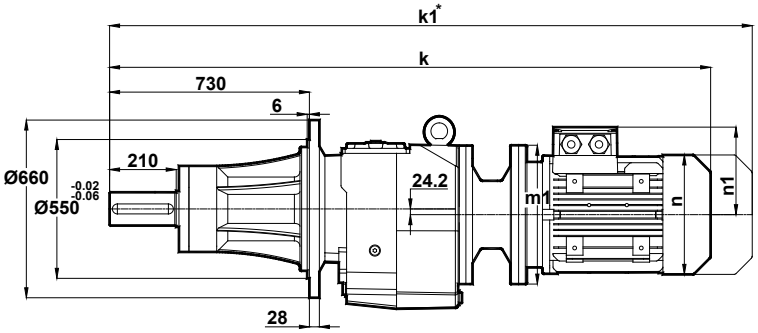

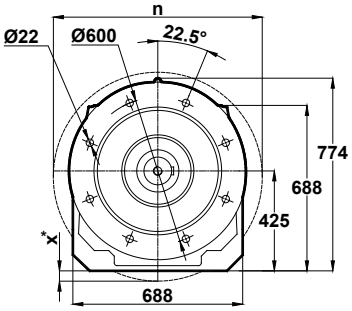

Motor Size												
IEC	160M/B5	160L/B5	180M/B5	180L/B5	200L/B5	225S/B5	225M/B5	250M/B5	280S/B5	280M/B5	315S/B5	315M/B5
k	1925.5	1925.5	2013.5	2013.5	2091.5	2151.5	2176.5	2274.5	2336.5	2336.5	2578.5	2578.5
k1	2073.5	2073.5	2172	2172	2278	2316.5	2341.5	2445	2509.5	2515.5	-	-
n / n1	315 / 219	315 / 219	347 / 234	347 / 234	390 / 275	434 / 285	434 / 285	480 / 322	544 / 350	544 / 350	614 / 510	614 / 510
m1 (B5)	350	350	350	350	400	450	450	550	550	550	660	660
m1 (B14)	-	-	-	-	-	-	-	-	-	-	-	-
x (B5)	-	-	-	-	-	-	-	-	-	-	-	-

Terminal Box

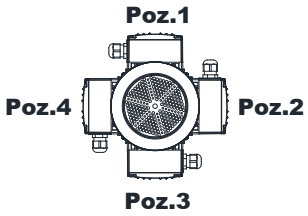

160-180-200-225-250-280-315

NVB974

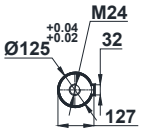

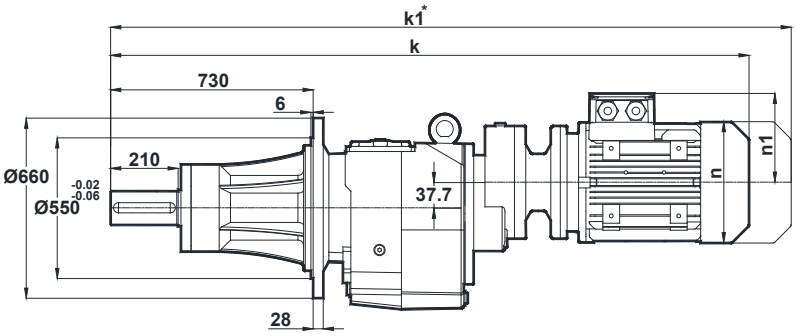

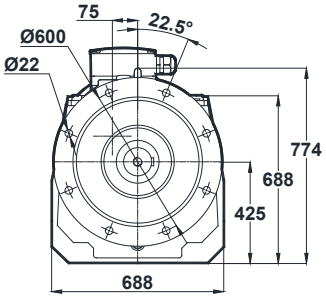

Motor Size				
IEC	100L/B5	112M/B5	132S/B5 132S/B14	132M/B5 132M/B14
k	1829.5	1850	1949	1949
k1	1938	1954.5	2079	2079
n / n1	193 / 147	215 / 158	257 / 179	257 / 179
m1 (B5)	250	250	300	300
m1 (B14)	-	-	200	200

Terminal Box

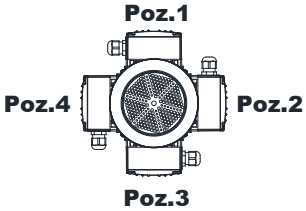

100-112-132

* Dimension " k1" is for motors with brake.
x: If Motor is lower than foot mounting plane

Tapped center hole to DIN 332, sheet 2

NVB975
NVB976

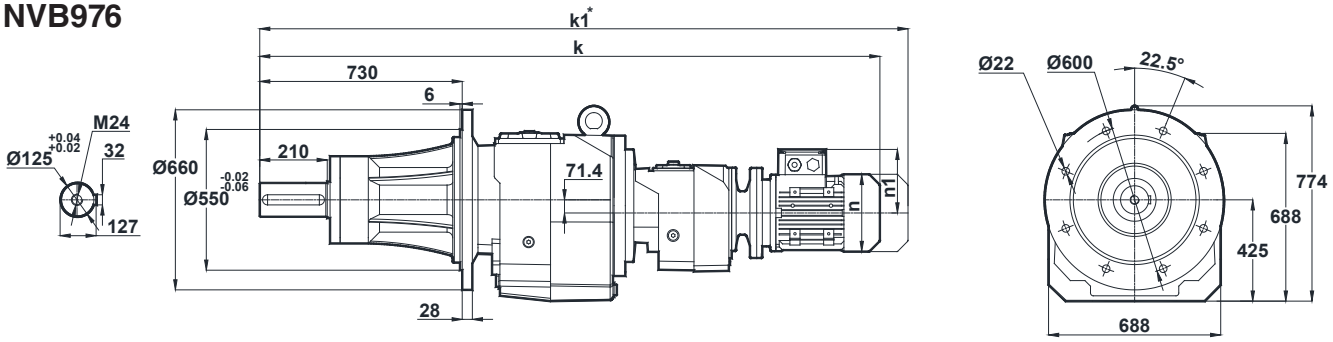

Motor Size						
IEC	80/B5	90S/B5 90S/B14	90L/B5 90L/B14	100L/B5 100L/B14	112M/B5 112M/B14	132S/B5 132S/B14
k	1889	1930	1930	1984	2004.5	2107
k1	1982	2033.5	2033.5	2092.5	2109	2237
n / n1	155 / 121	176 / 132	176 / 132	193 / 147	215 / 158	257 / 179
m1 (B5)	200	200	200	250	250	300
m1 (B14)	-	140	140	160	160	200

Terminal Box

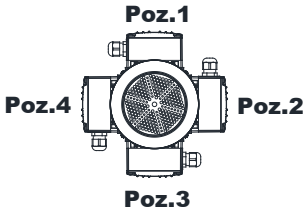

80-90-100-112-132

* Dimension " k1" is for motors with brake.

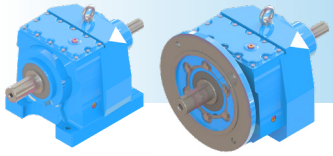

MT / NT - DIMENSION PAGES

Tapped center hole to DIN 332, sheet 2

MT002
MT003

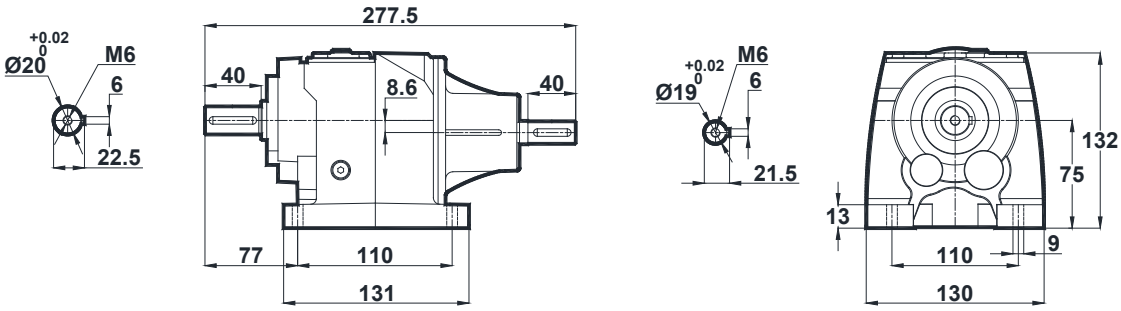

NT002
NT003

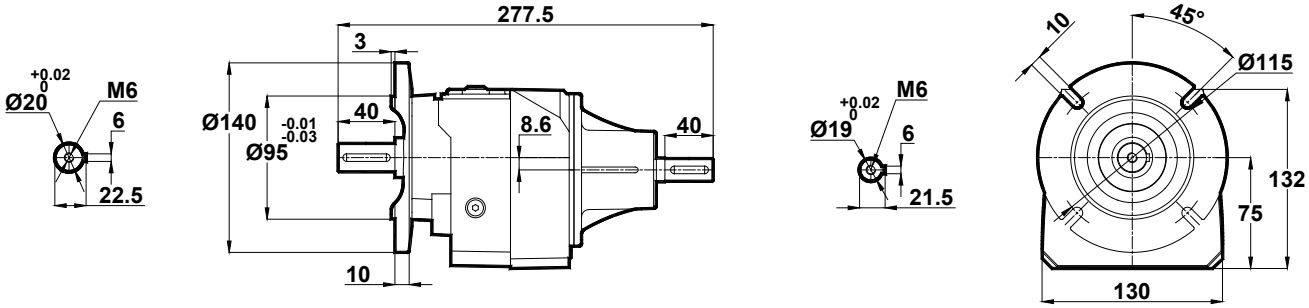

Optional Flange Dimensions

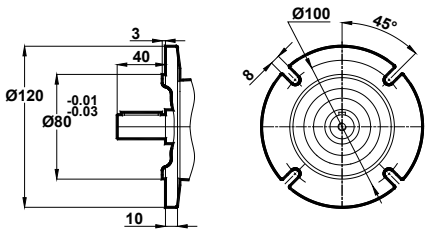

Opt. 1

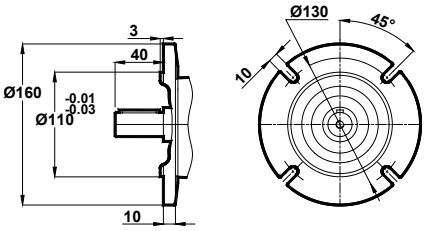

Opt. 2

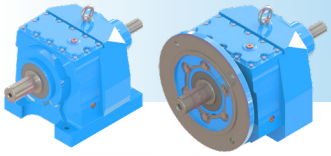

Tapped center hole to DIN 332, sheet 2

MT102
MT103

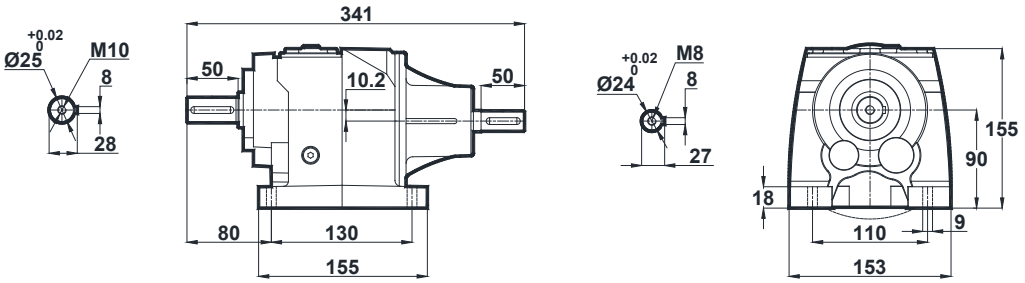

NT102
NT103

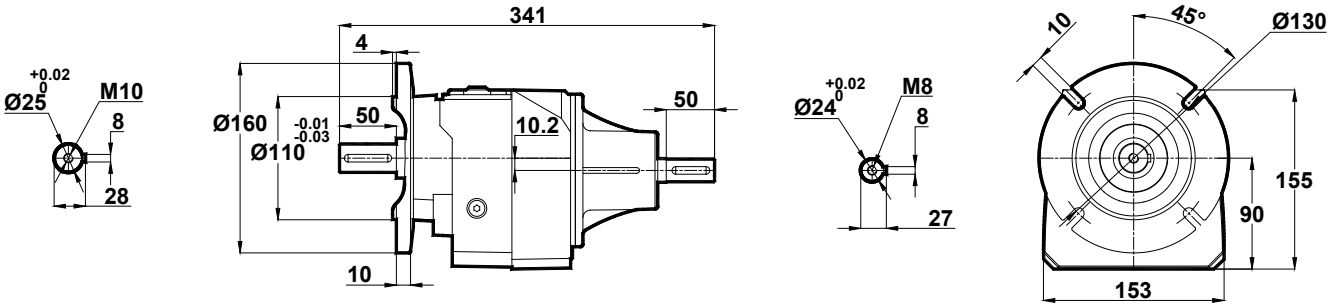

Optional Flange Dimensions

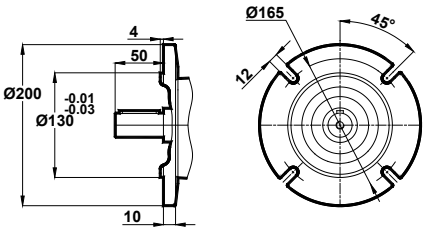

Opt. 1

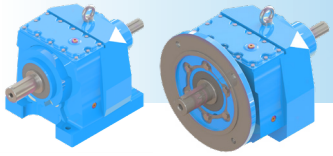

MT / NT - DIMENSION PAGES

Tapped center hole to DIN 332, sheet 2

MT172
MT173

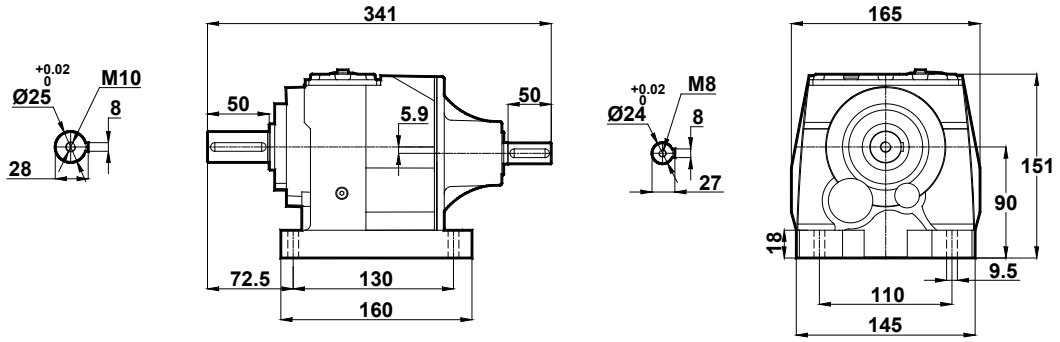

NT172
NT173

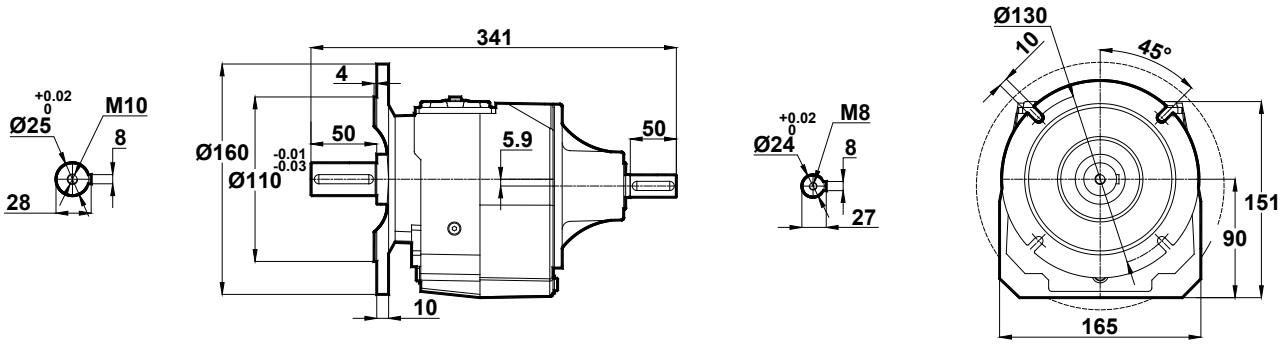

Optional Flange Dimensions

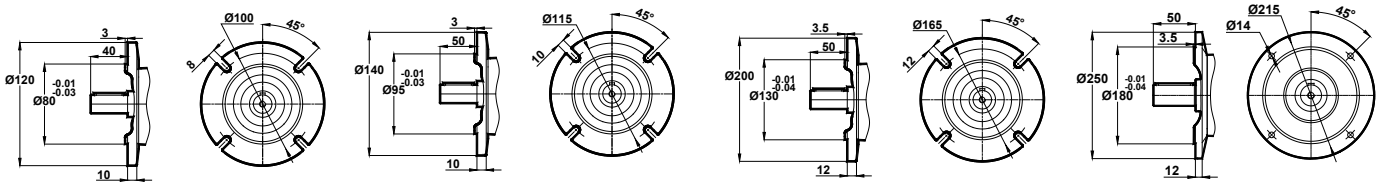

Opt. 1 **Opt. 2** **Opt. 3** **Opt. 4**

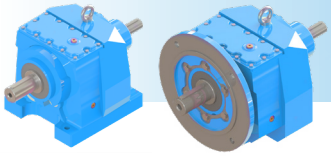

Tapped center hole to DIN 332, sheet 2

MT202
MT203

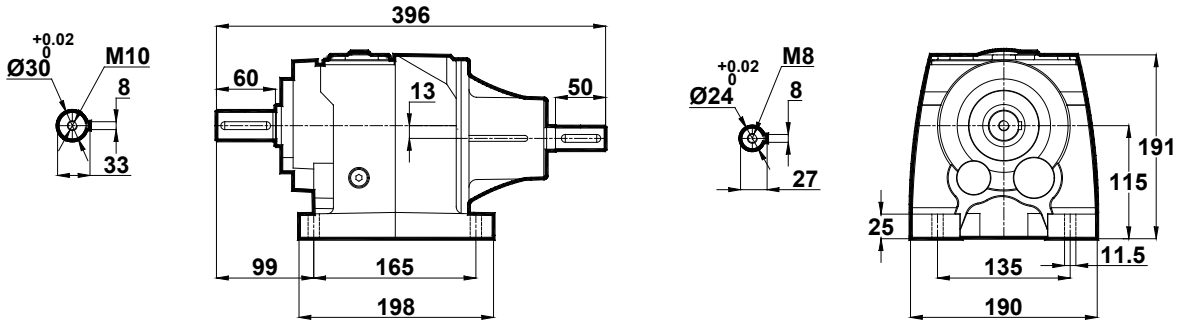

NT202
NT203

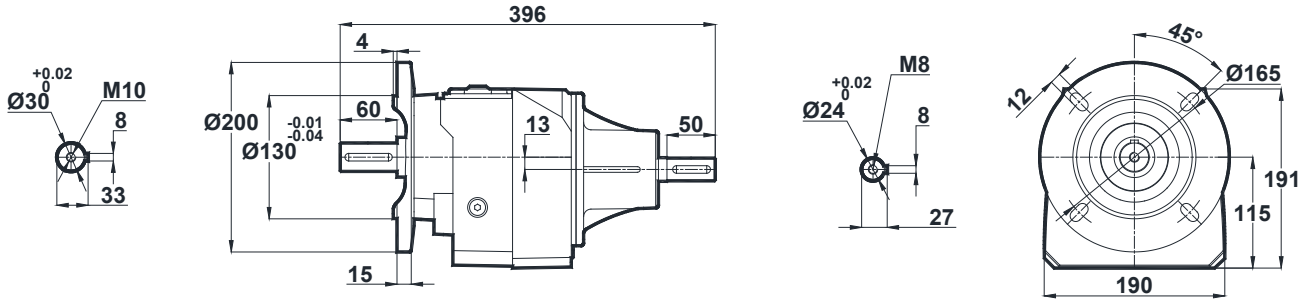

Optional Flange Dimensions

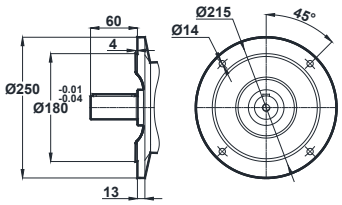

Opt. 1

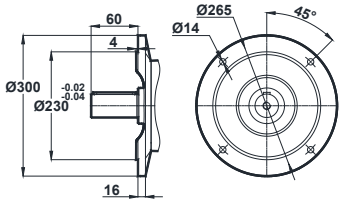

Opt. 2

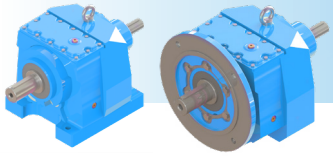

MT / NT - DIMENSION PAGES

Tapped center hole to DIN 332, sheet 2

MT272
MT273

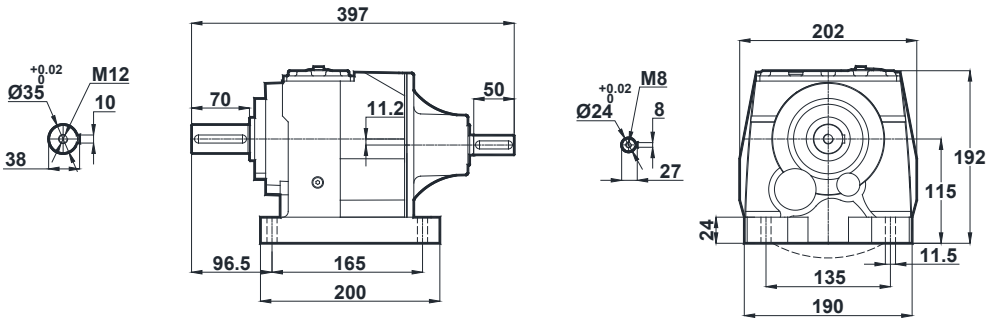

NT272
NT273

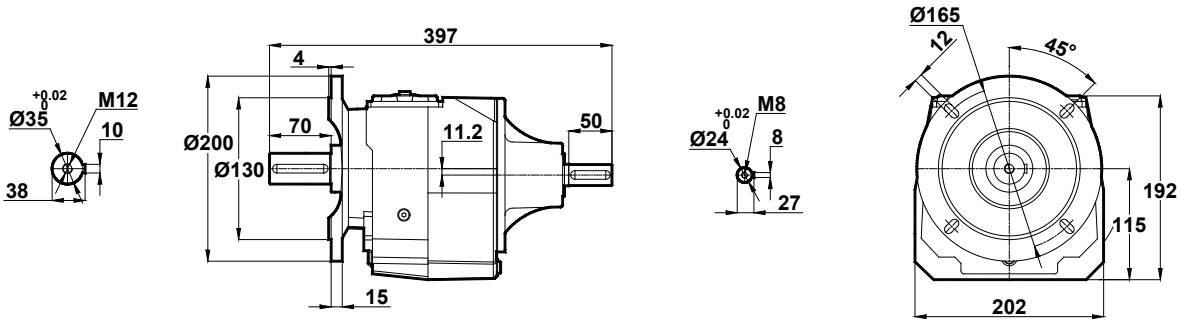

Optional Flange Dimensions

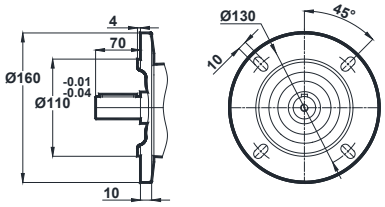

Opt. 1

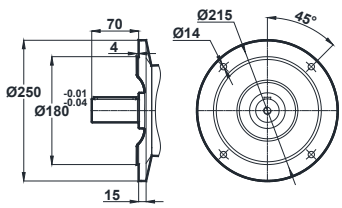

Opt. 2

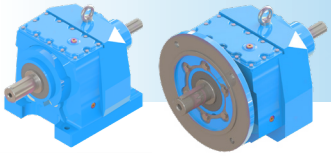

Tapped center hole to DIN 332, sheet 2

MT275
MT276

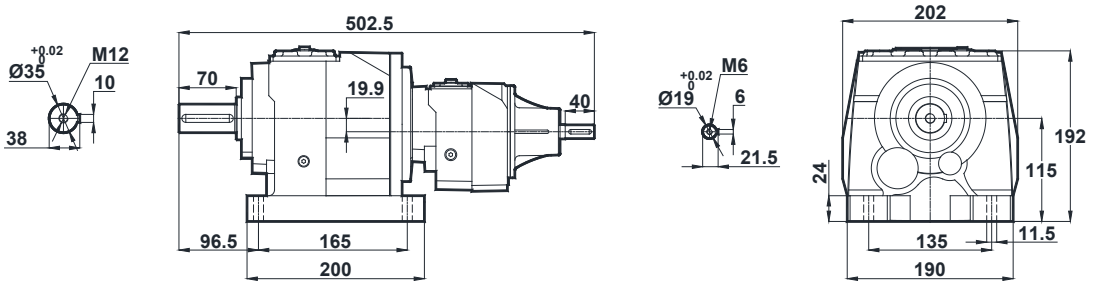

NT275
NT276

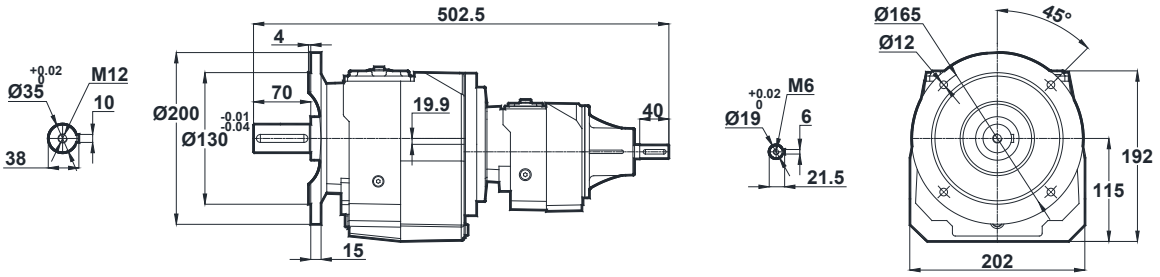

Optional Flange Dimensions

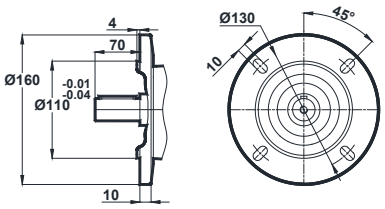

Opt. 1

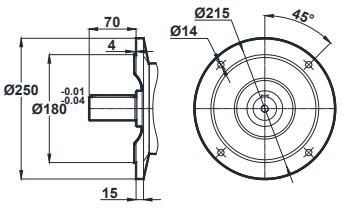

Opt. 2

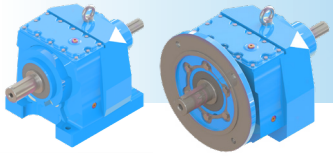

MT / NT - DIMENSION PAGES

Tapped center hole to DIN 332, sheet 2

MT282
MT283

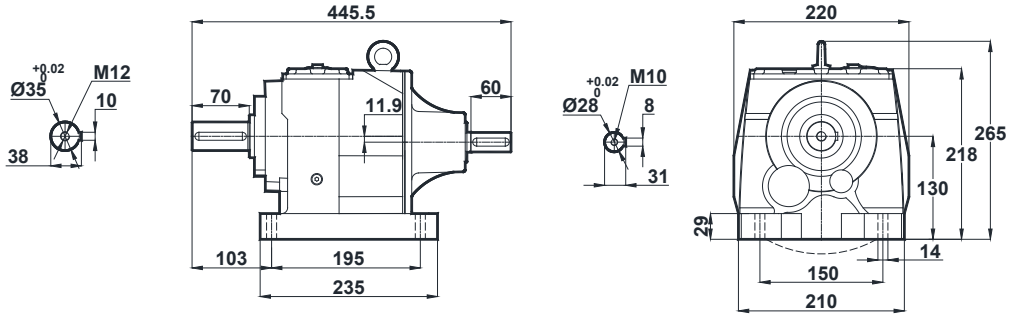

NT282
NT283

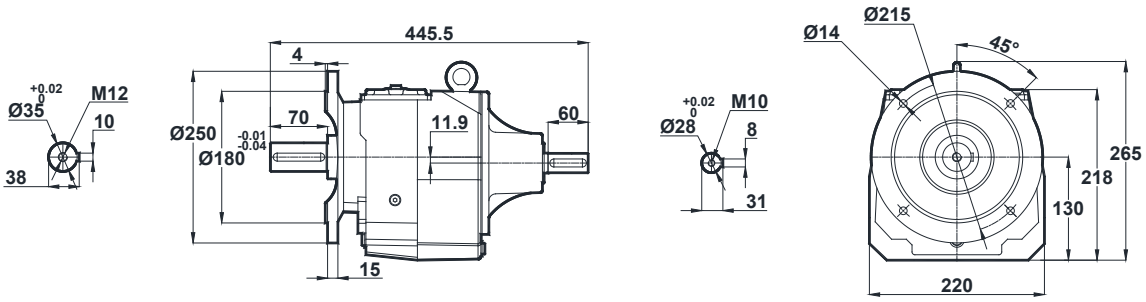

Optional Flange Dimensions

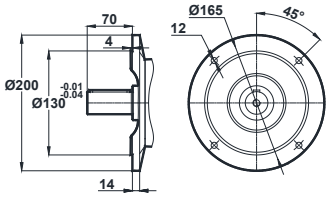

Opt. 1

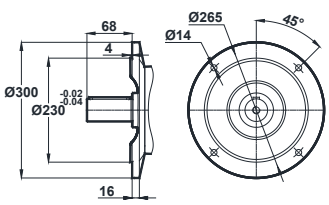

Opt. 2

Tapped center hole to DIN 332, sheet 2

MT284

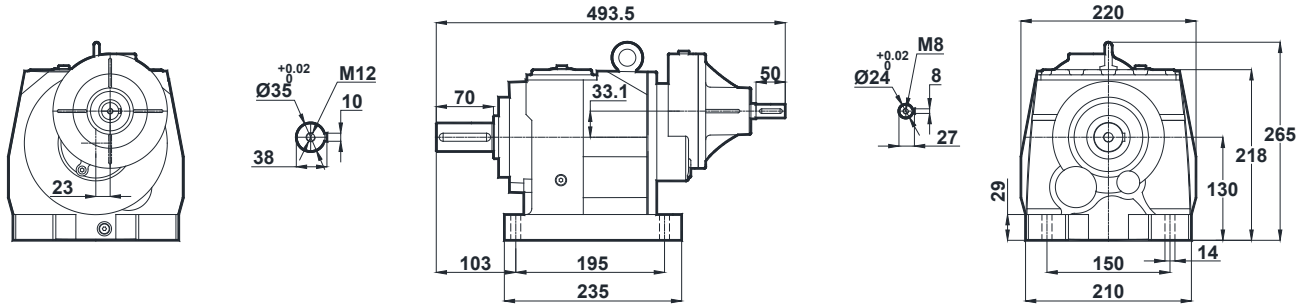

NT284

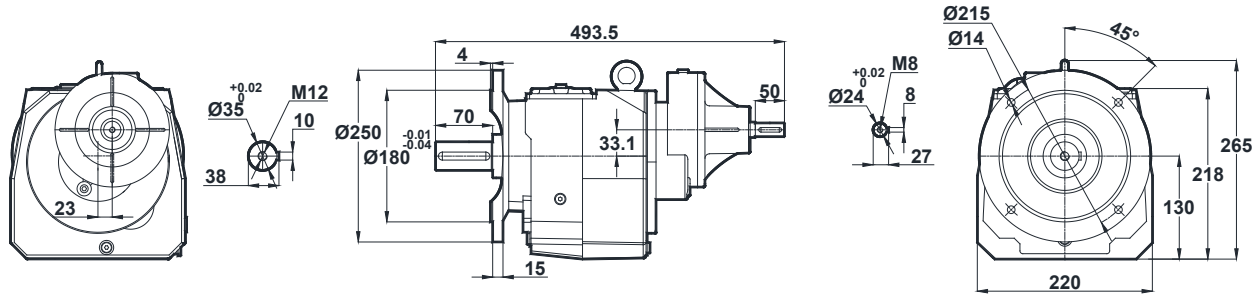

Optional Flange Dimensions

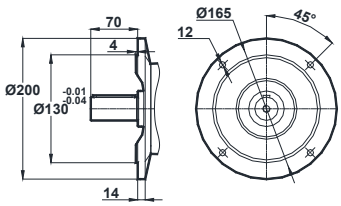

Opt. 1

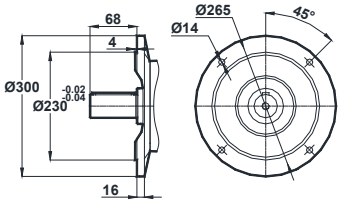

Opt. 2

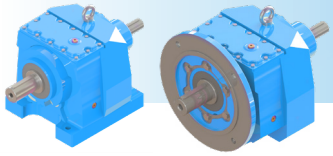

MT / NT - DIMENSION PAGES

Tapped center hole to DIN 332, sheet 2

MT285
MT286

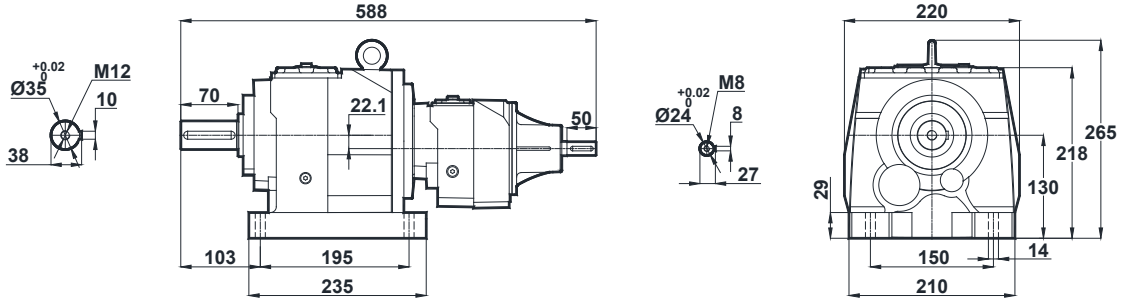

NT285
NT286

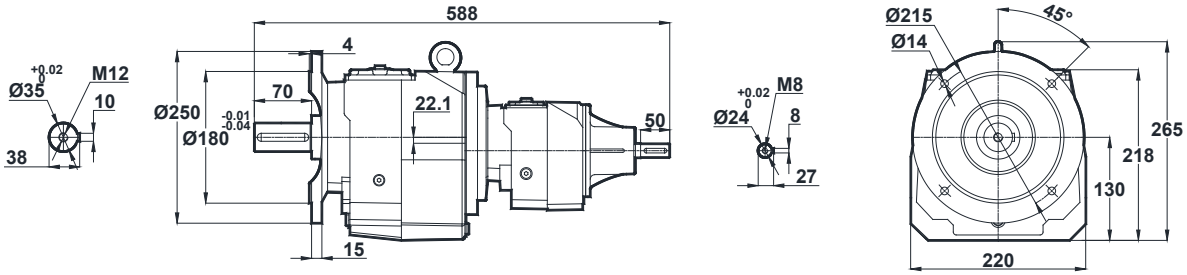

Optional Flange Dimensions

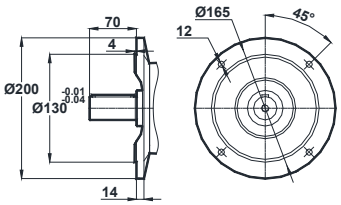

Opt. 1

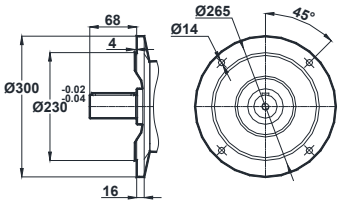

Opt. 2

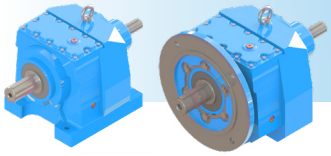

Tapped center hole to DIN 332, sheet 2

MT372
MT373

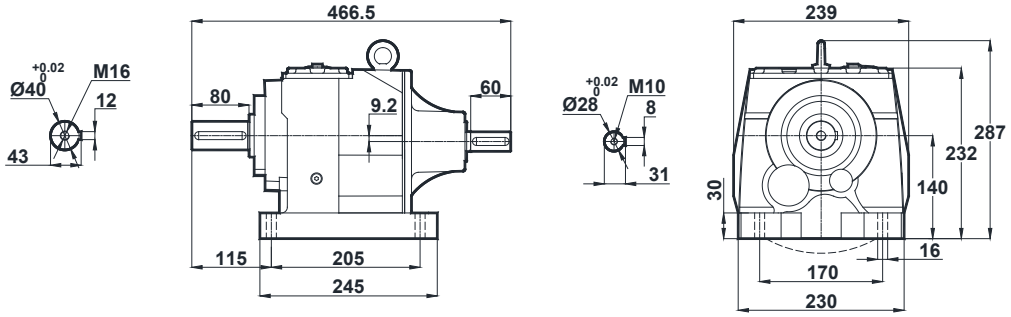

NT372
NT373

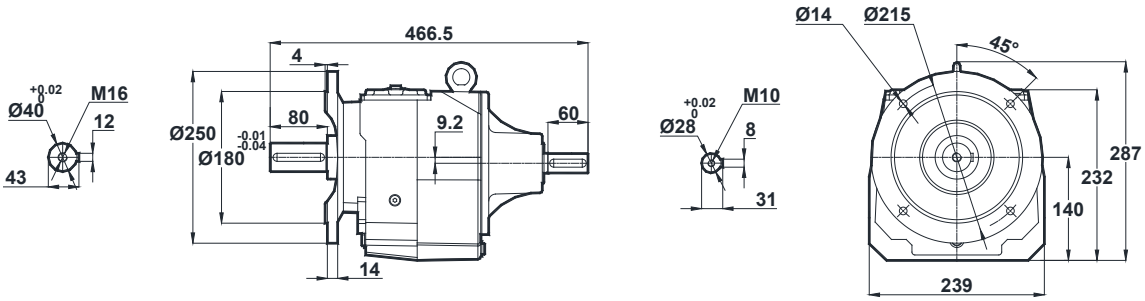

Optional Flange Dimensions

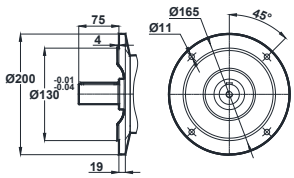

Opt. 1

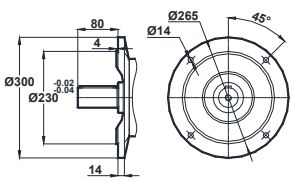

Opt. 2

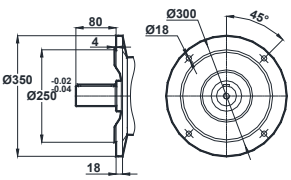

Opt. 3

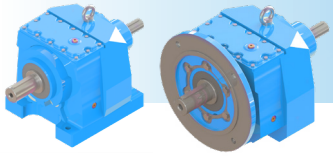

MT / NT - DIMENSION PAGES

Tapped center hole to DIN 332, sheet 2

MT374

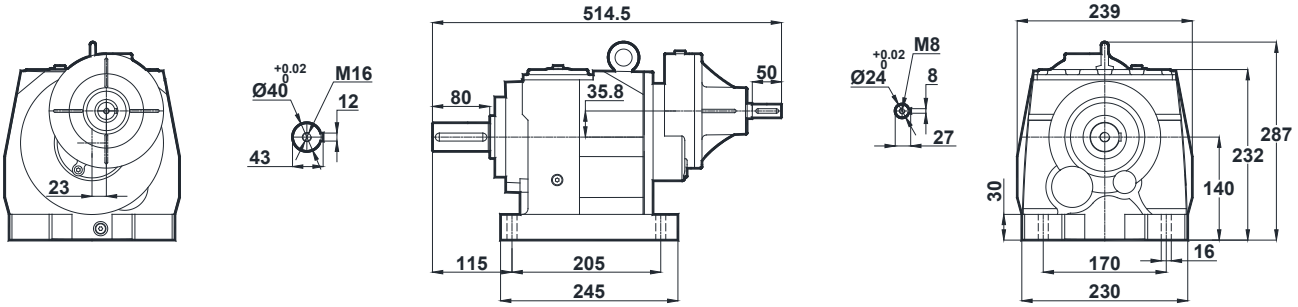

NT374

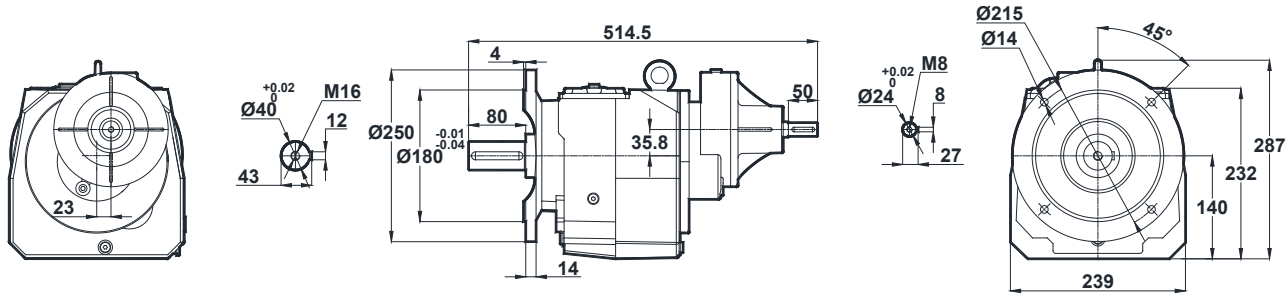

Optional Flange Dimensions

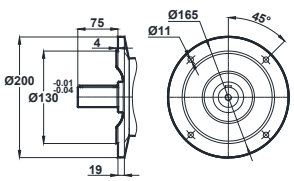

Opt. 1

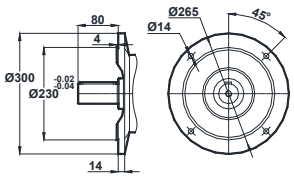

Opt. 2

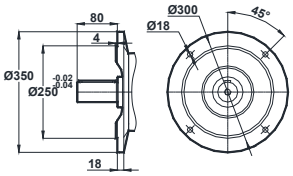

Opt. 3

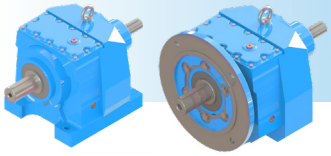

Tapped center hole to DIN 332, sheet 2

MT375
MT376

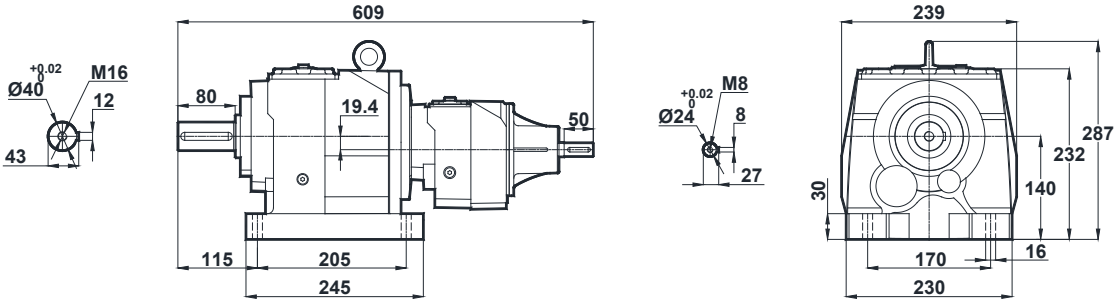

NT375
NT376

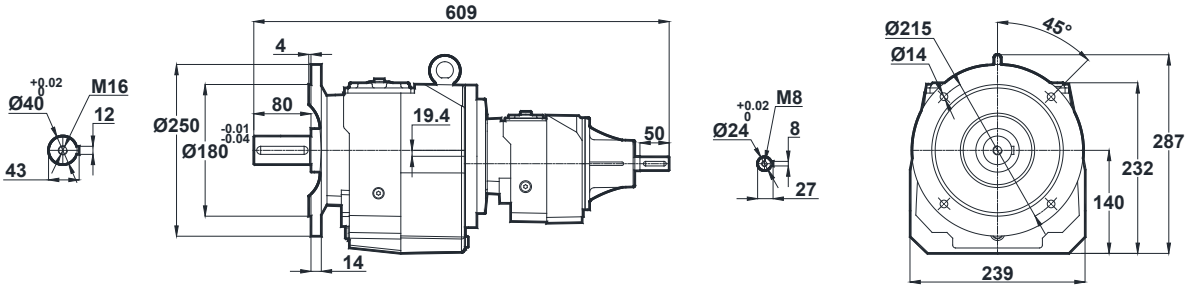

Optional Flange Dimensions

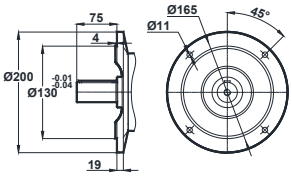

Opt. 1

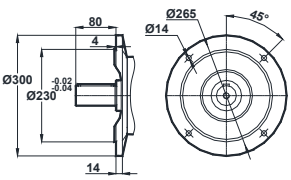

Opt. 2

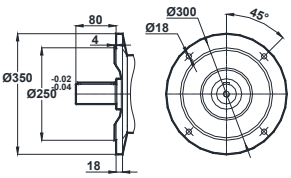

Opt. 3

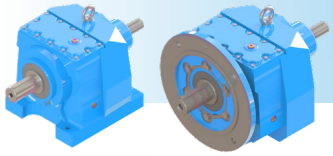

MT / NT - DIMENSION PAGES

Tapped center hole to DIN 332, sheet 2

MT472
MT473

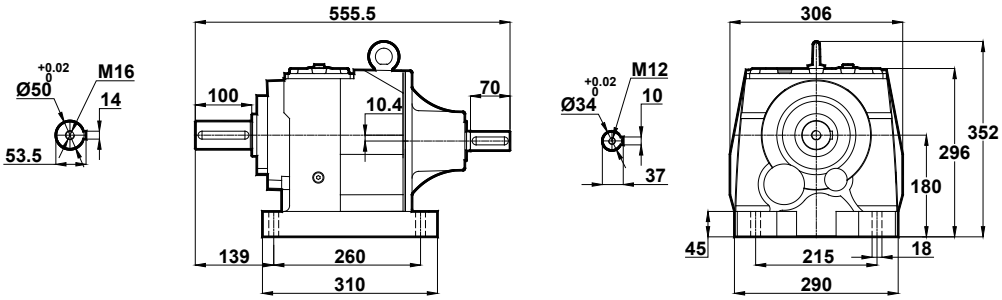

NT472
NT473

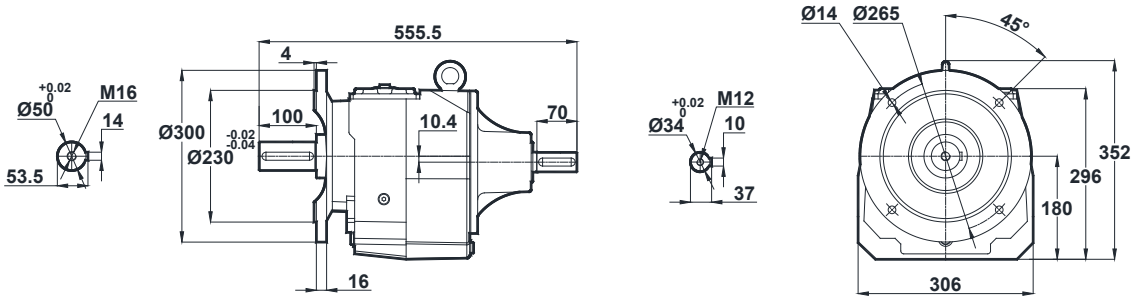

Optional Flange Dimensions

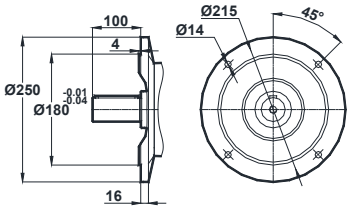

Opt. 1

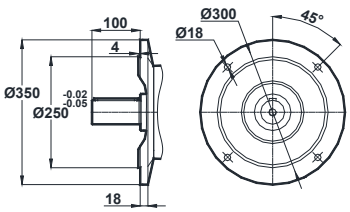

Opt. 2

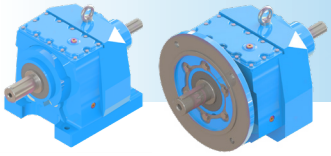

Tapped center hole to DIN 332, sheet 2

MT474

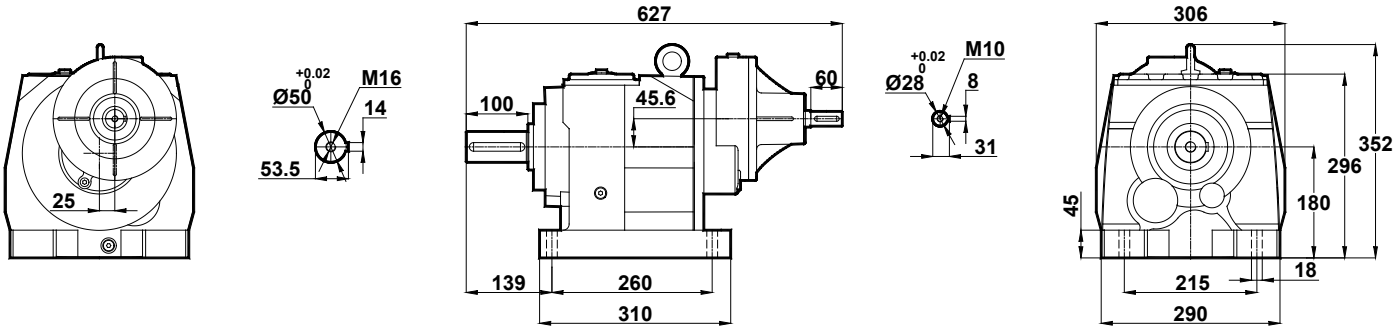

NT474

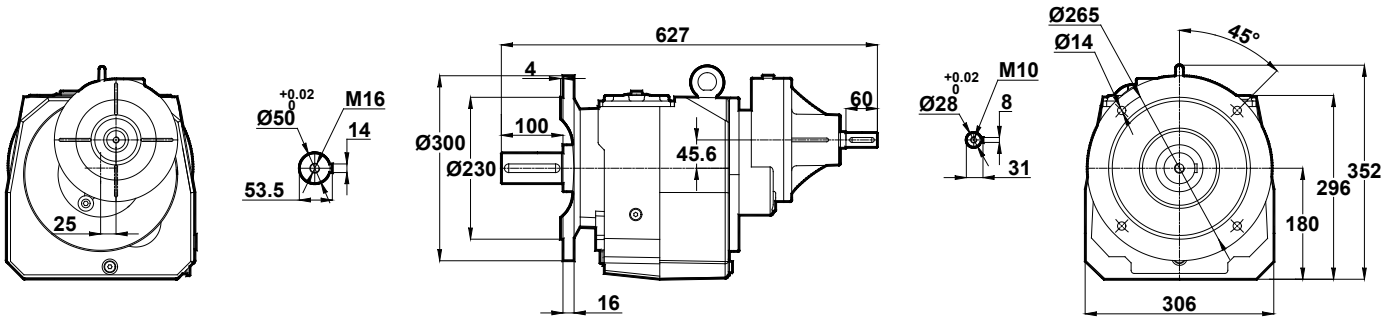

Optional Flange Dimensions

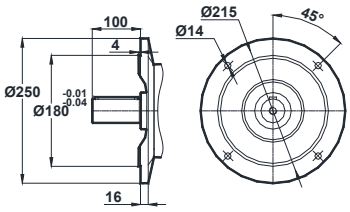

Opt. 1

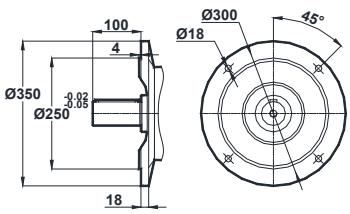

Opt. 2

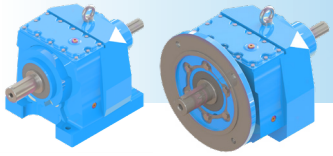

MT / NT - DIMENSION PAGES

Tapped center hole to DIN 332, sheet 2

MT475
MT476

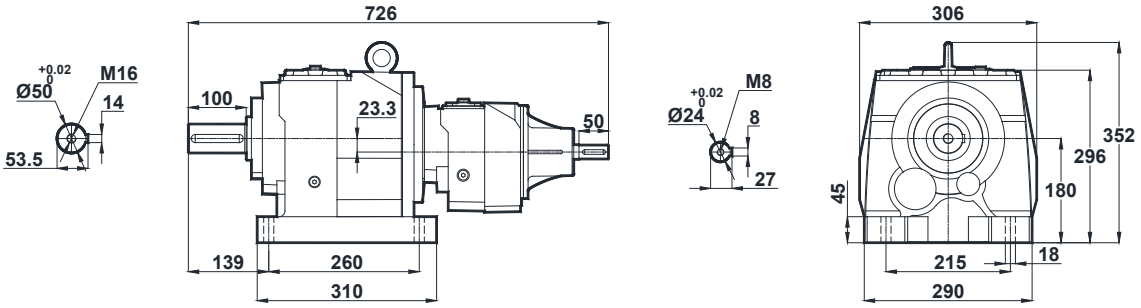

NT475
NT476

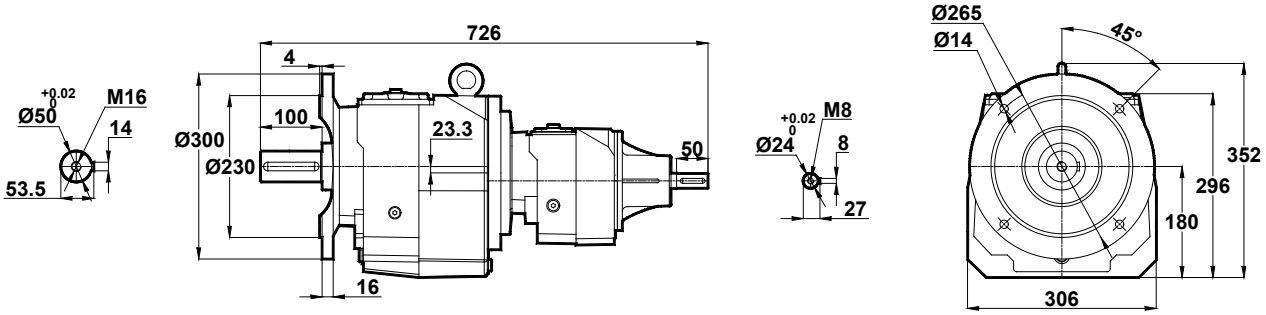

Optional Flange Dimensions

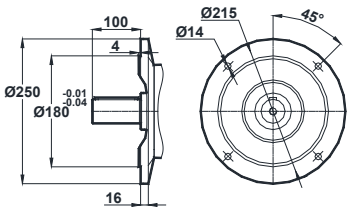

Opt. 1

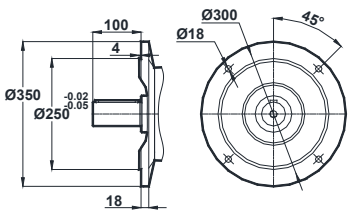

Opt. 2

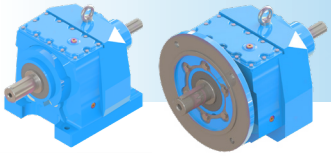

Tapped center hole to DIN 332, sheet 2

MT572
MT573

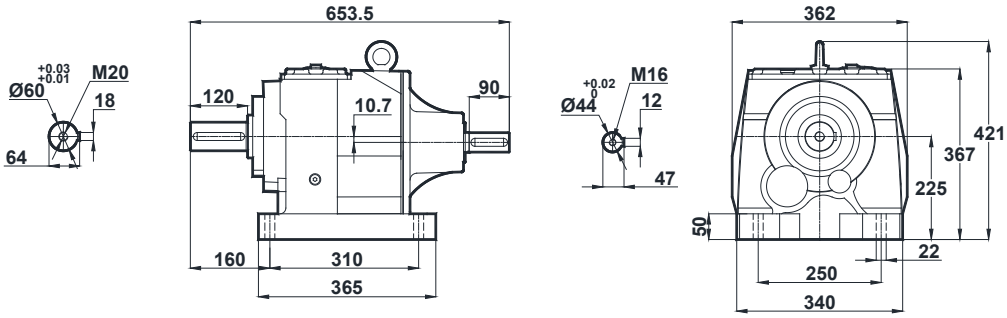

NT572
NT573

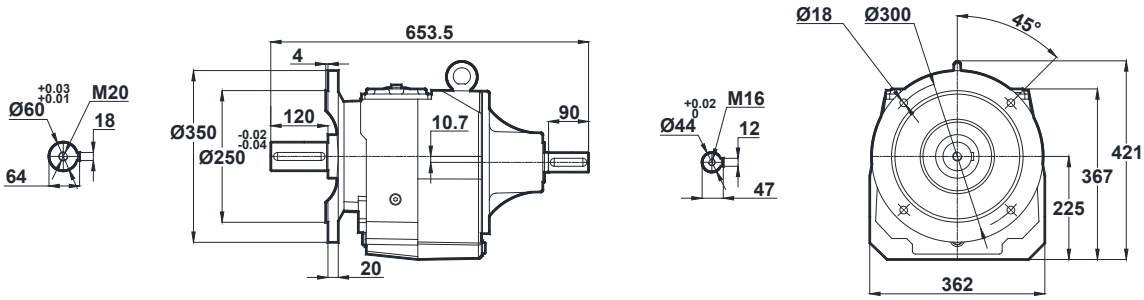

Optional Flange Dimensions

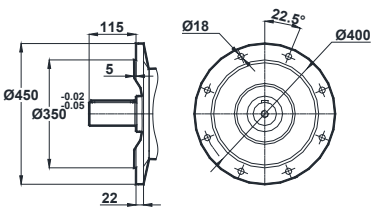

Opt. 1

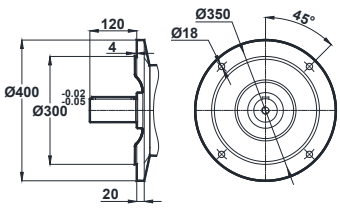

Opt. 2

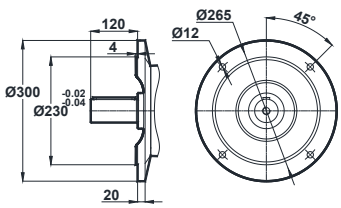

Opt. 3

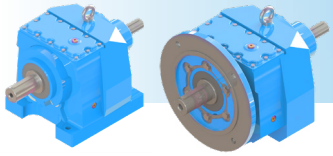

MT / NT - DIMENSION PAGES

Tapped center hole to DIN 332, sheet 2

MT574

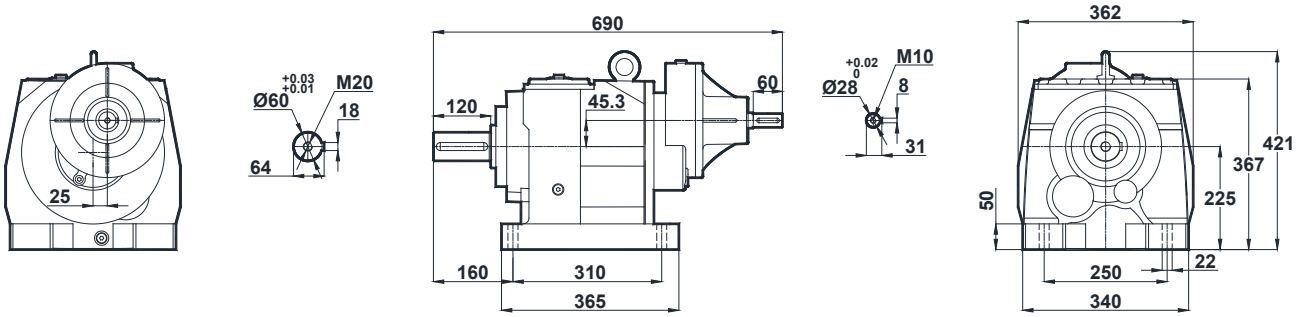

NT574

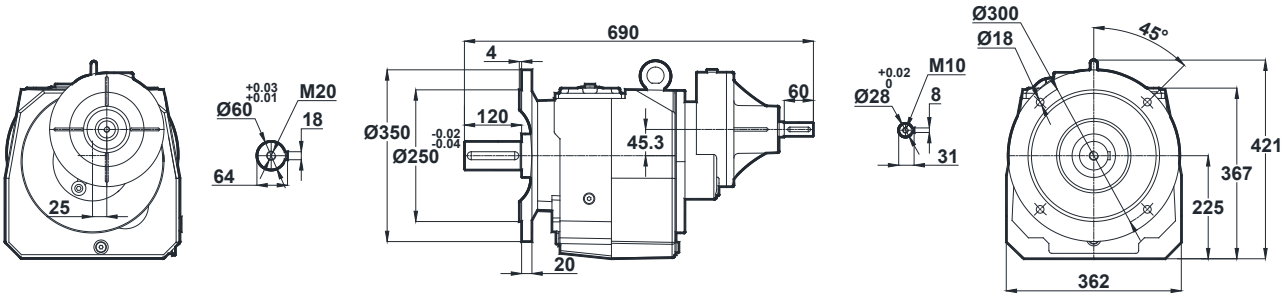

Optional Flange Dimensions

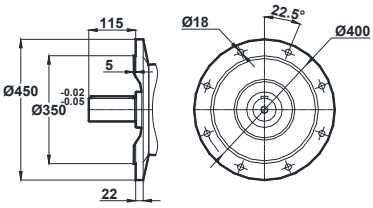

Opt. 1

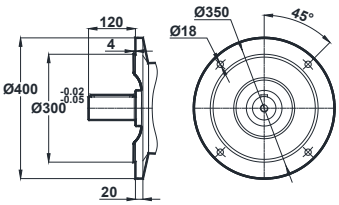

Opt. 2

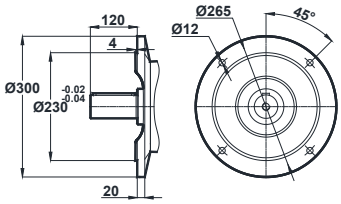

Opt. 3

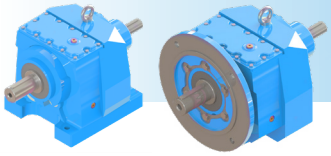

Tapped center hole to DIN 332, sheet 2

MT575
MT576

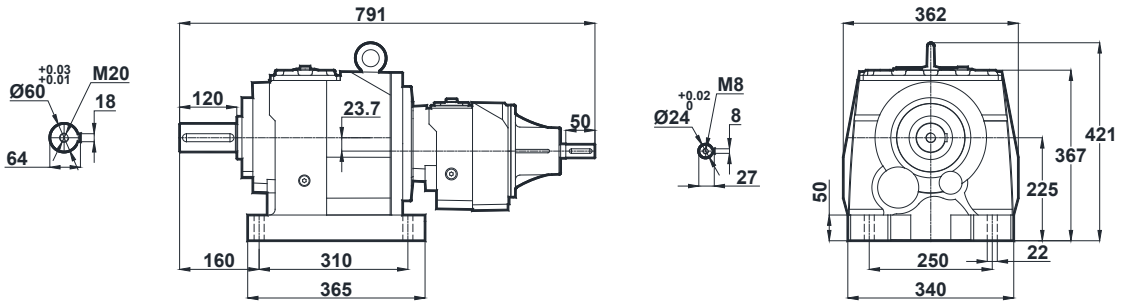

NT575
NT576

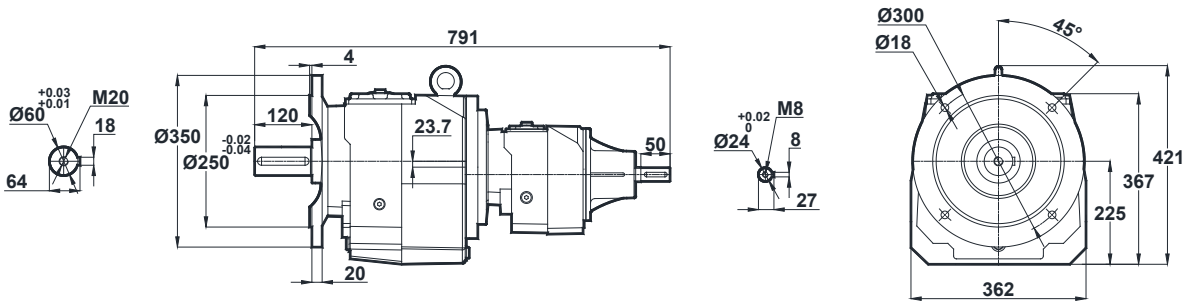

Optional Flange Dimensions

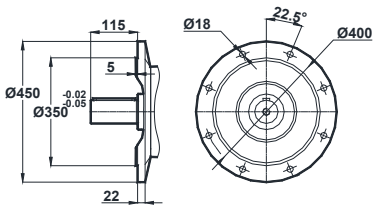

Opt. 1

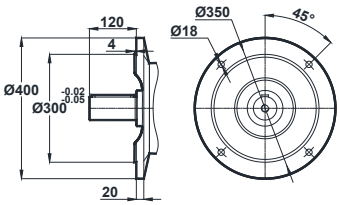

Opt. 2

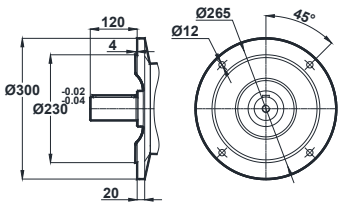

Opt. 3

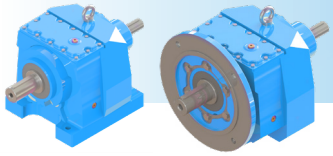

MT / NT - DIMENSION PAGES

Tapped center hole to DIN 332, sheet 2

MT672
MT673

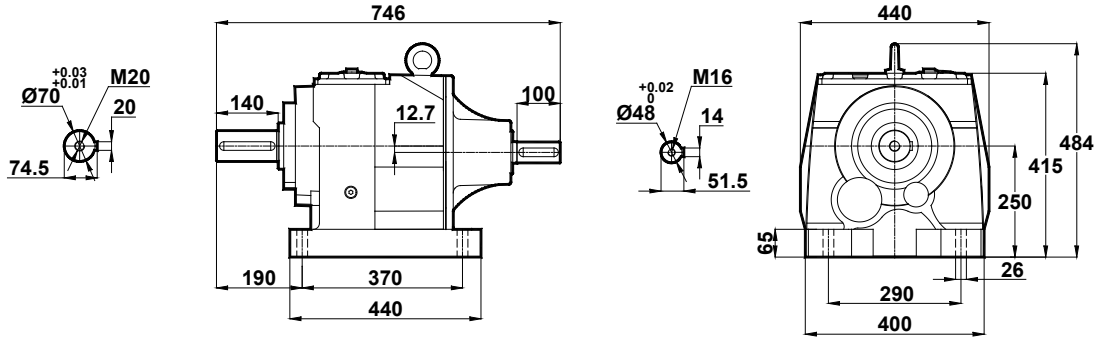

NT672
NT673

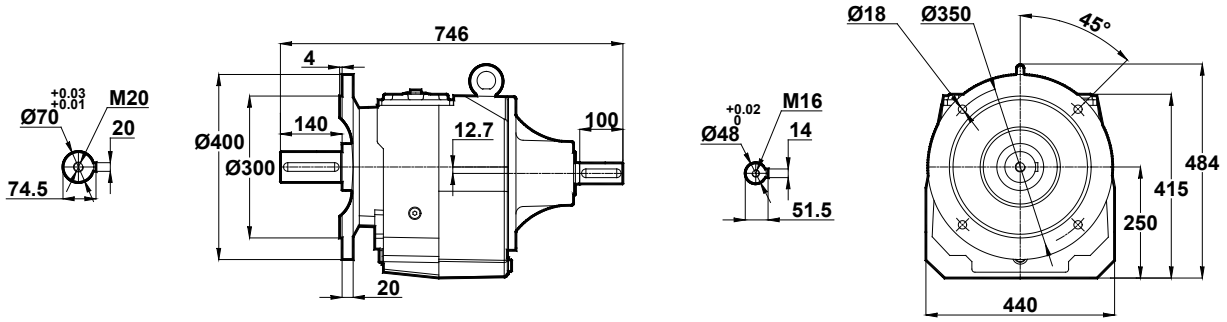

Optional Flange Dimensions

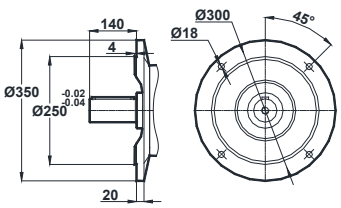

Opt. 1

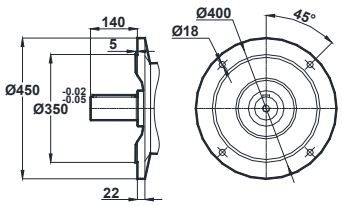

Opt. 2

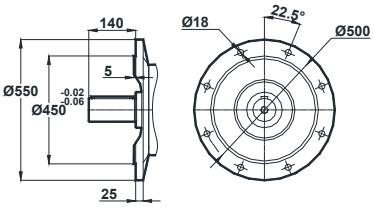

Opt. 3

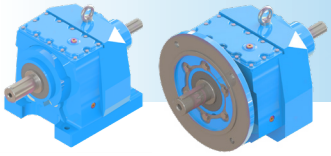

Tapped center hole to DIN 332, sheet 2

MT674

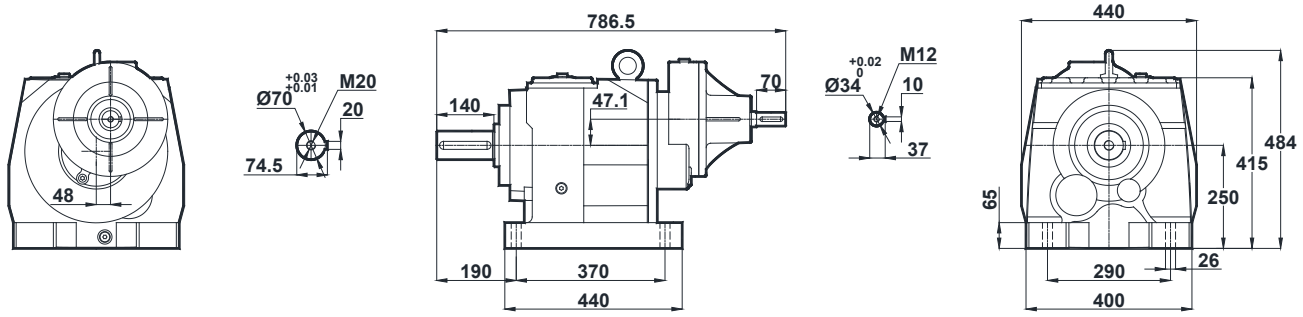

NT674

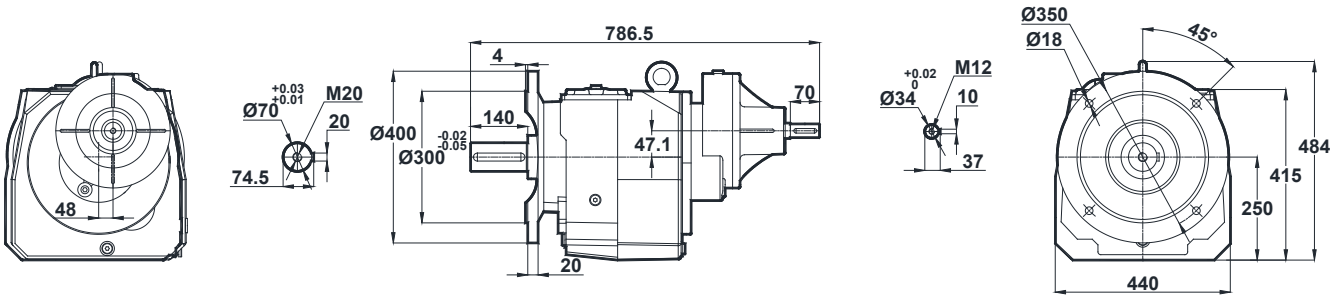

Optional Flange Dimensions

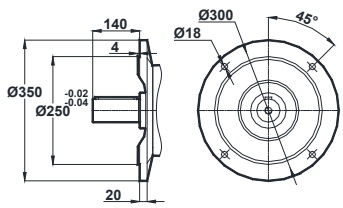

Opt. 1

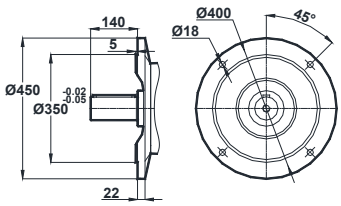

Opt. 2

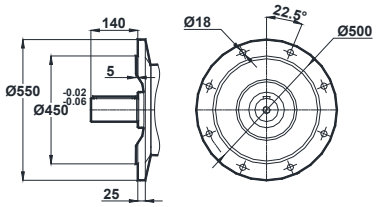

Opt. 3

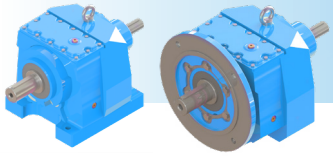

MT / NT - DIMENSION PAGES

Tapped center hole to DIN 332, sheet 2

MT675
MT676

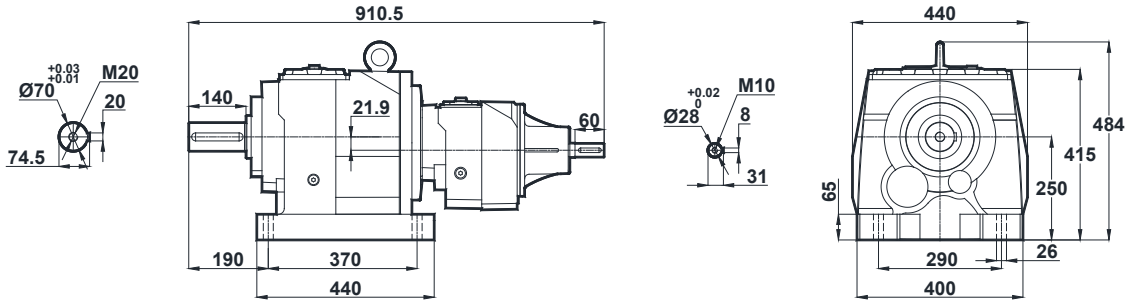

NT675
NT676

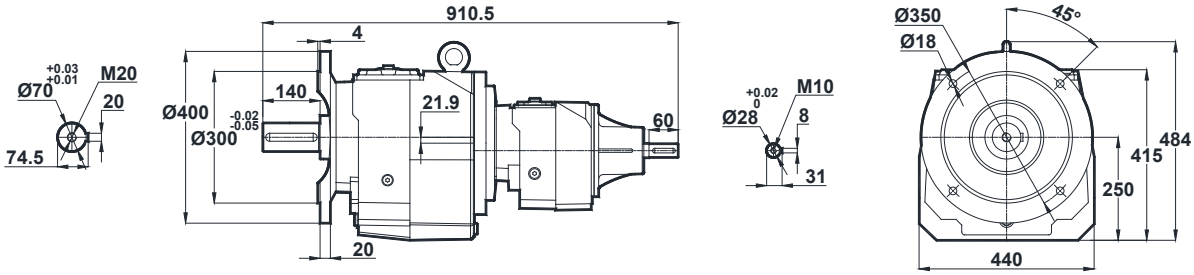

Optional Flange Dimensions

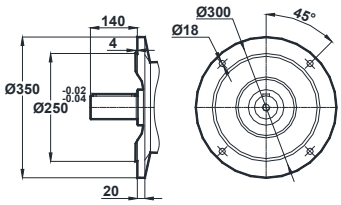

Opt. 1

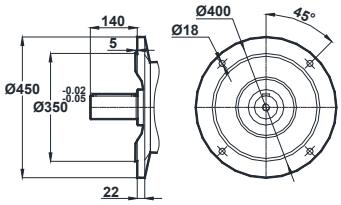

Opt. 2

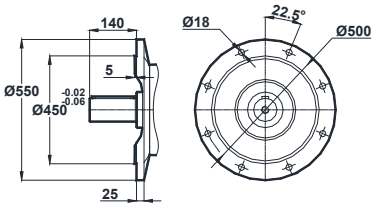

Opt. 3

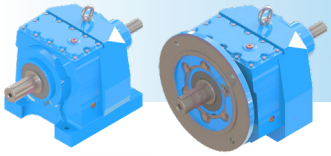

Tapped center hole to DIN 332, sheet 2

MT772
MT773

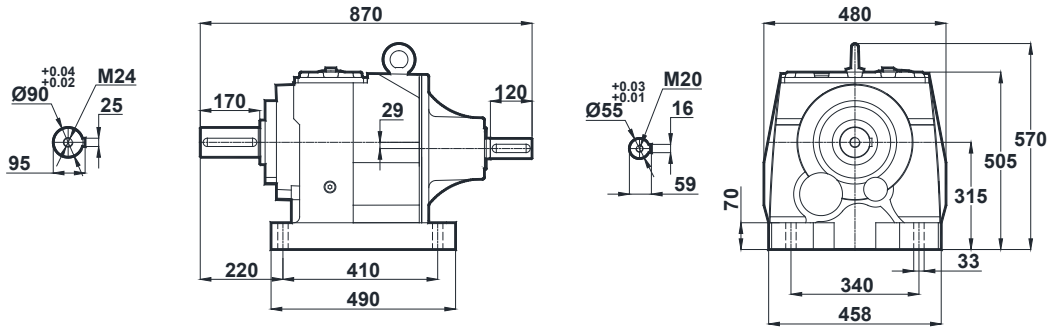

NT772
NT773

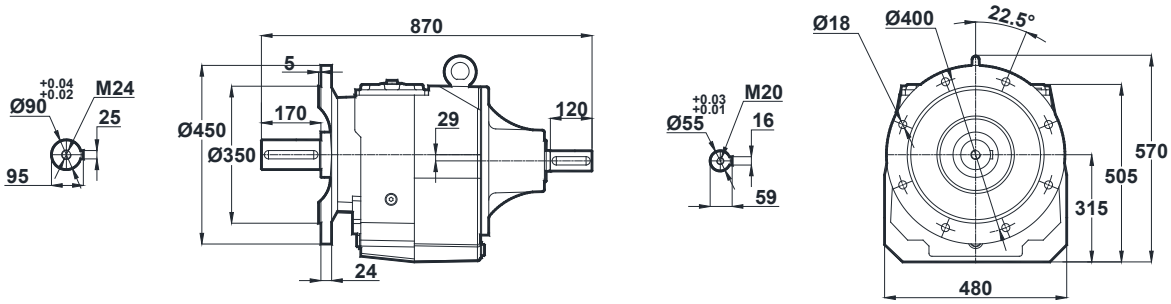

Optional Flange Dimensions

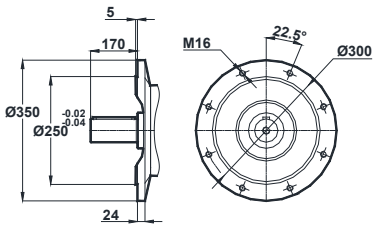

Opt. 1

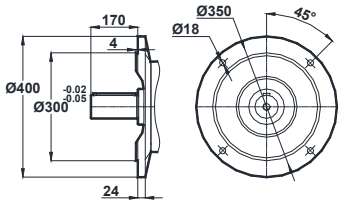

Opt. 2

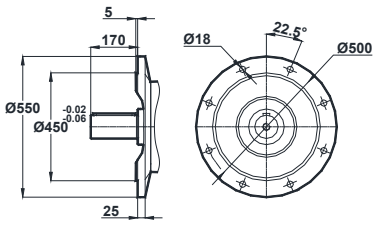

Opt. 3

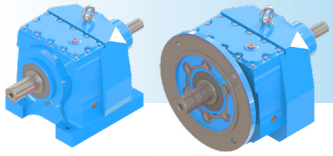

MT / NT - DIMENSION PAGES

Tapped center hole to DIN 332, sheet 2

MT774

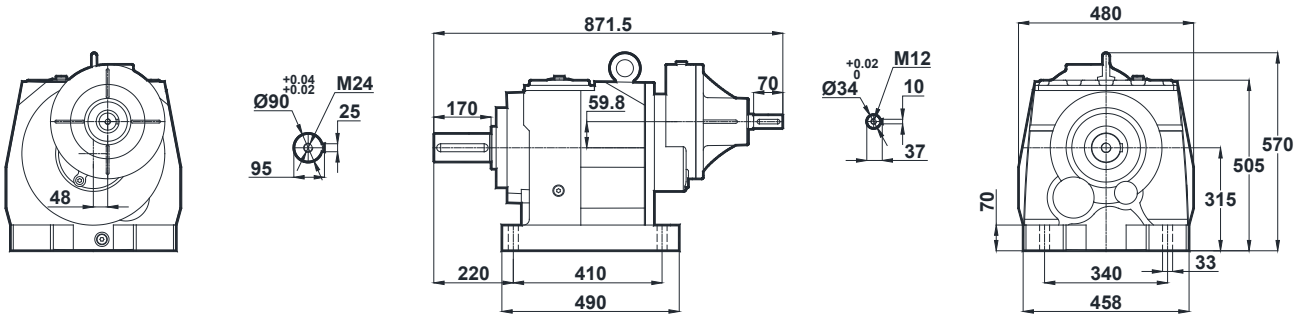

NT774

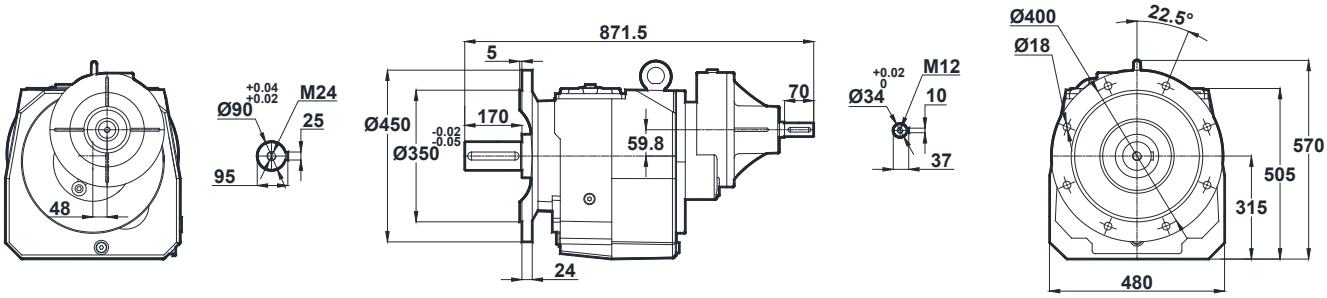

Optional Flange Dimensions

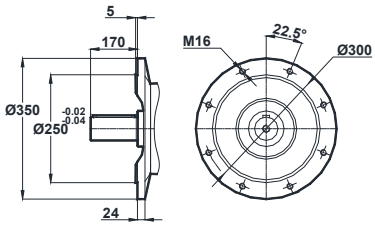

Opt. 1

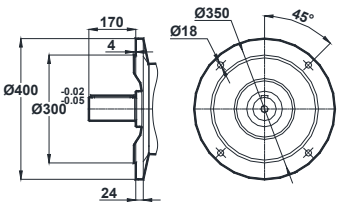

Opt. 2

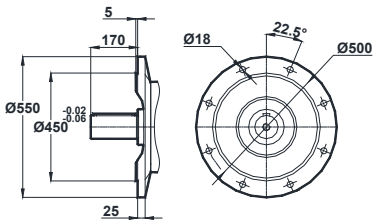

Opt. 3

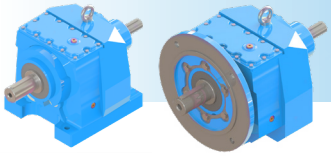

Tapped center hole to DIN 332, sheet 2

MT775
MT776

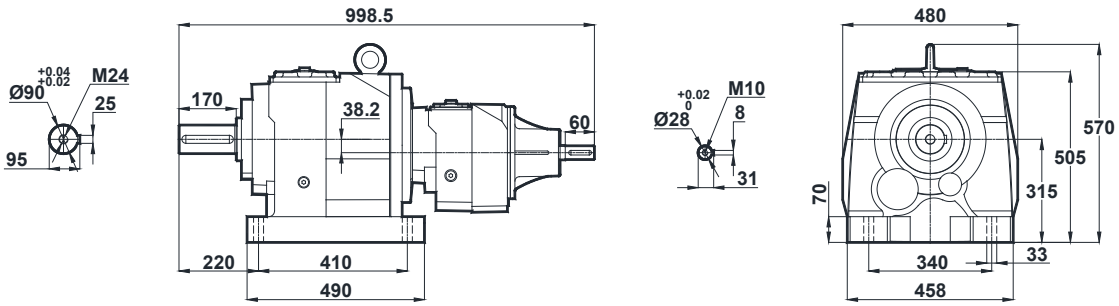

NT775
NT776

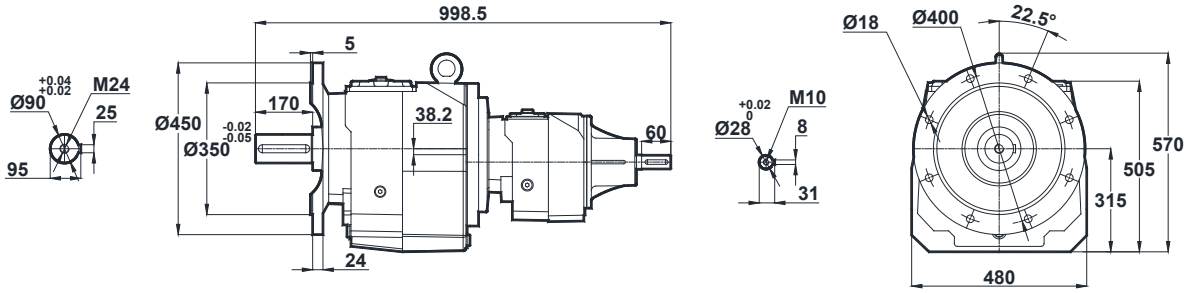

Optional Flange Dimensions

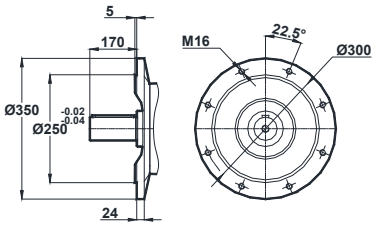

Opt. 1

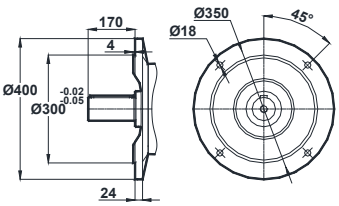

Opt. 2

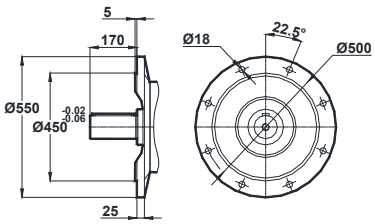

Opt. 3

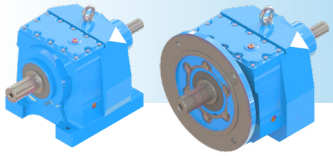

MT / NT - DIMENSION PAGES

Tapped center hole to DIN 332, sheet 2

MT872
MT873

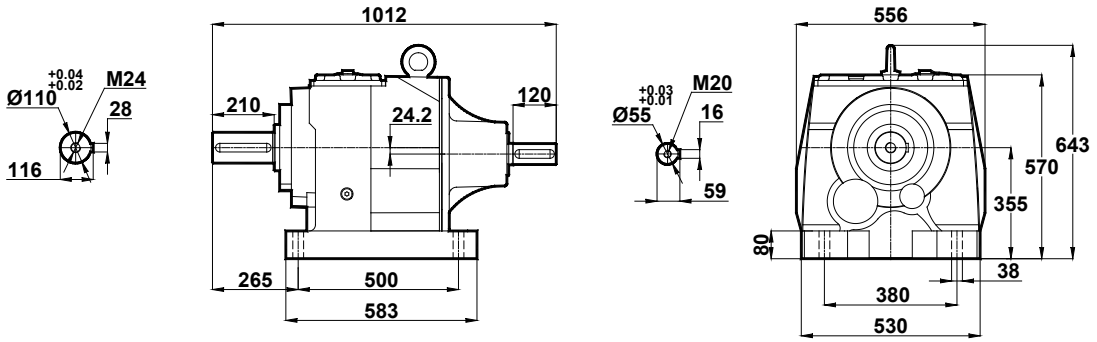

NT872
NT873

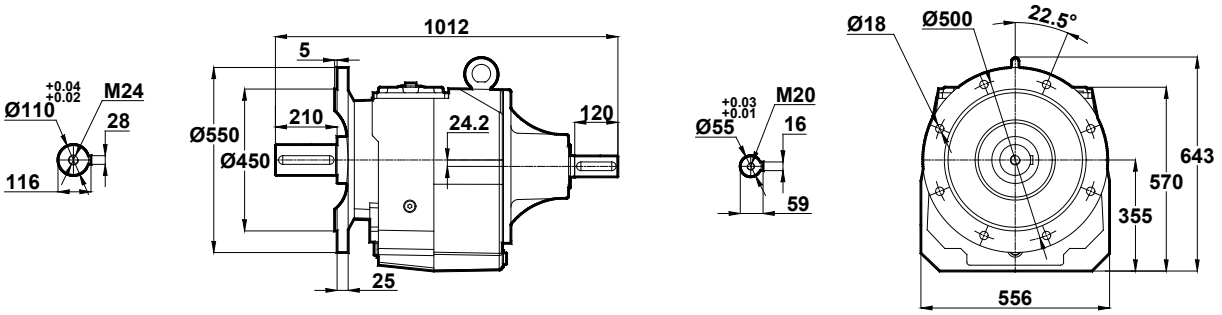

Optional Flange Dimensions

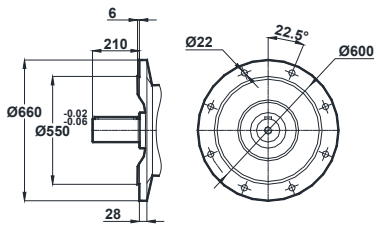

Opt. 1

Tapped center hole to DIN 332, sheet 2

MT874

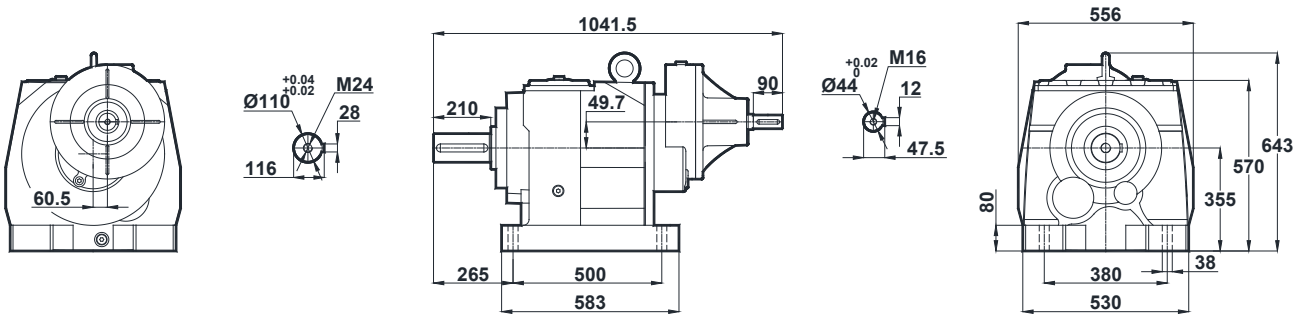

NT874

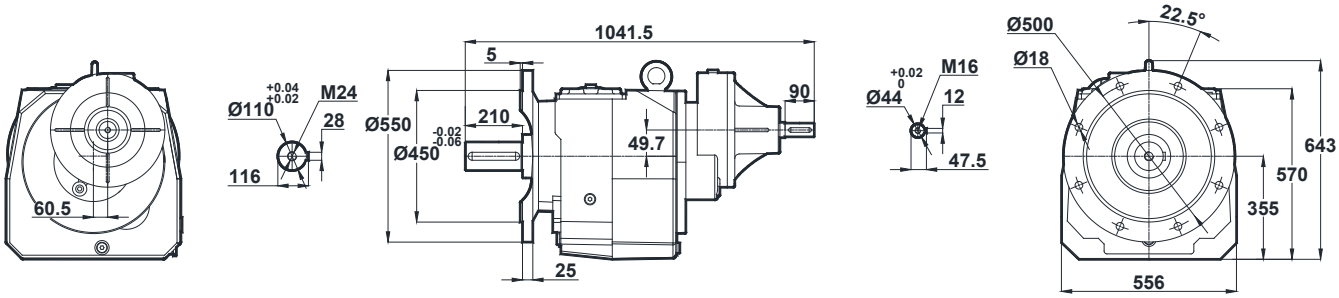

Optional Flange Dimensions

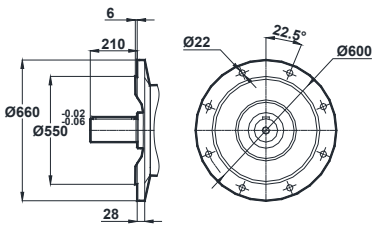

Opt. 1

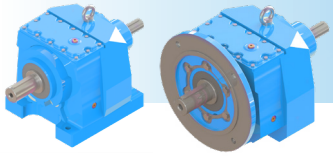

MT / NT - DIMENSION PAGES

Tapped center hole to DIN 332, sheet 2

MT875
MT876

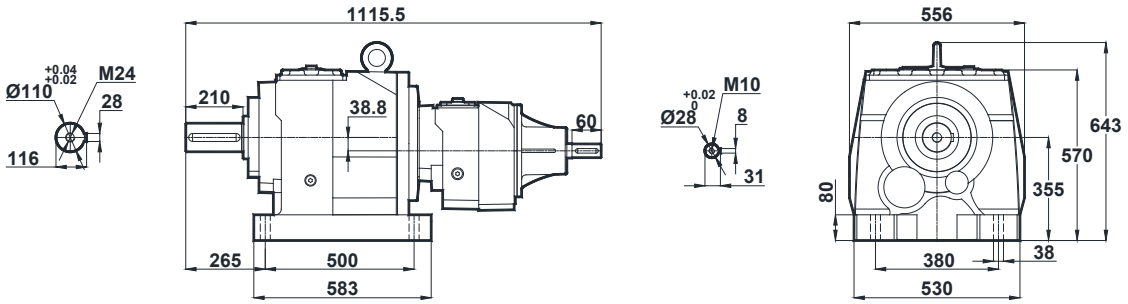

NT875
NT876

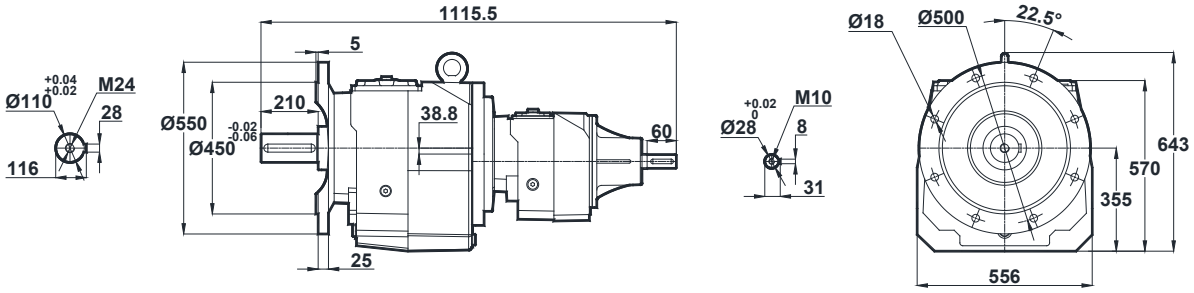

Optional Flange Dimensions

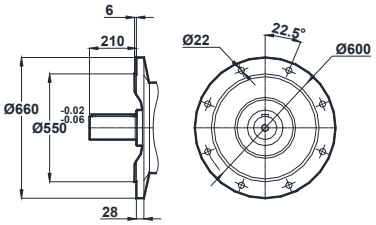

Opt. 1

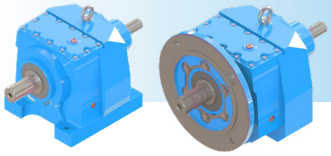

Tapped center hole to DIN 332, sheet 2

MT972
MT973

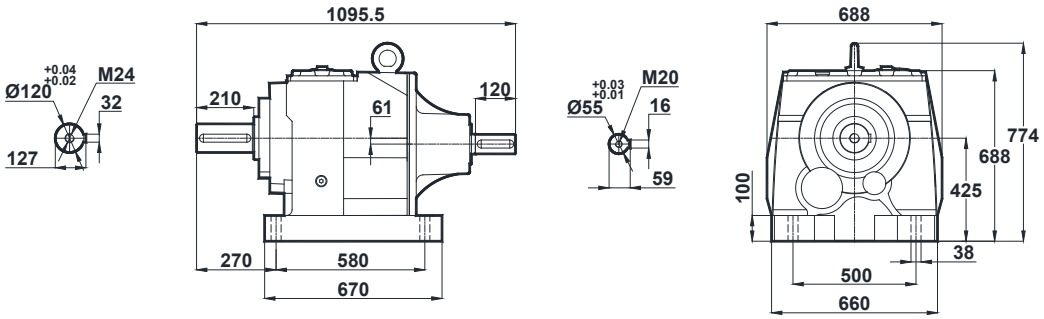

NT972
NT973

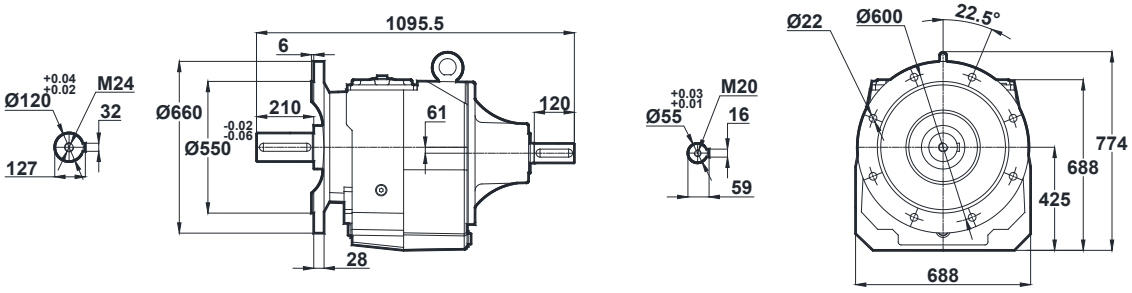

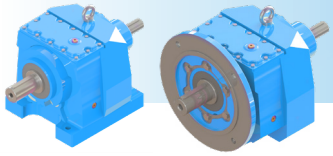

MT / NT - DIMENSION PAGES

Tapped center hole to DIN 332, sheet 2

MT974

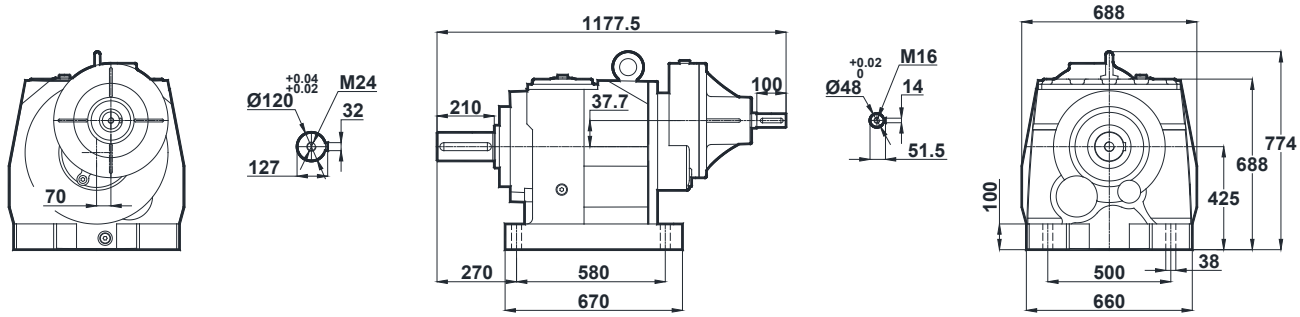

NT974

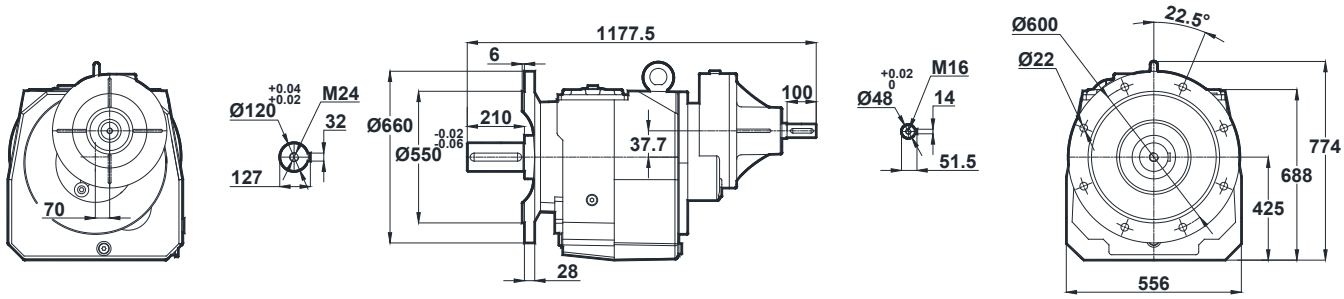

Tapped center hole to DIN 332, sheet 2

MT975
MT976

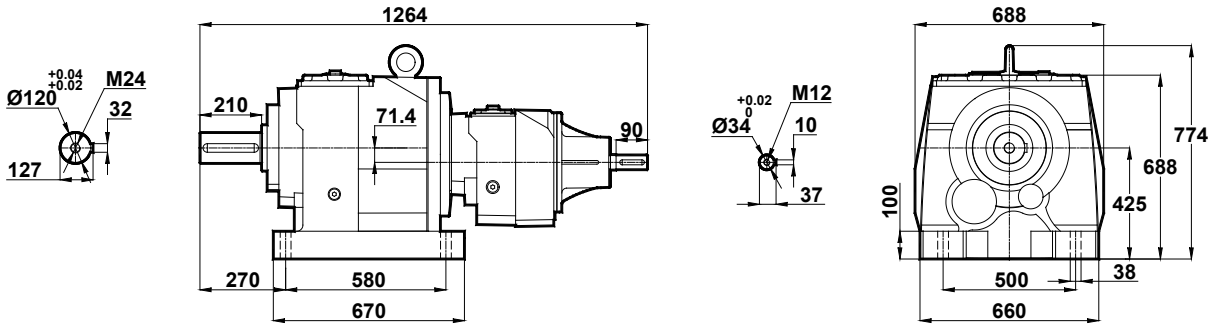

NT975
NT976

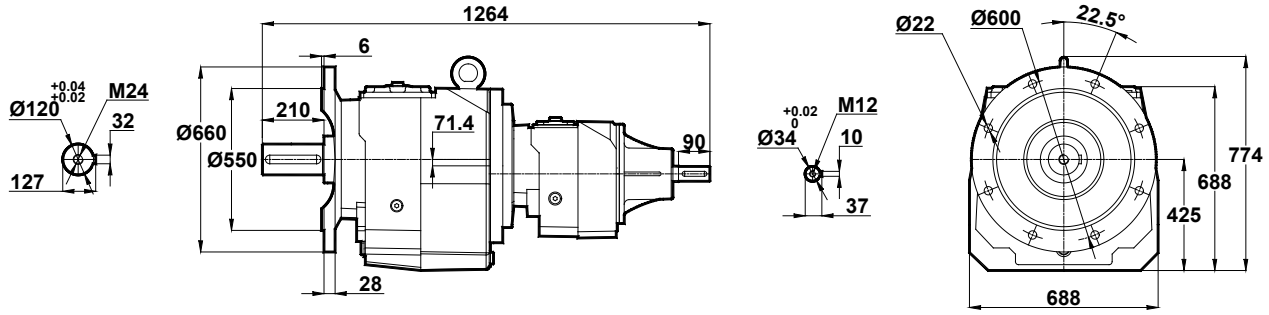

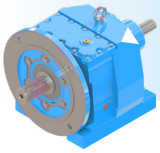

MTF - DIMENSION PAGES

Tapped center hole to DIN 332, sheet 2

MTF002
MTF003

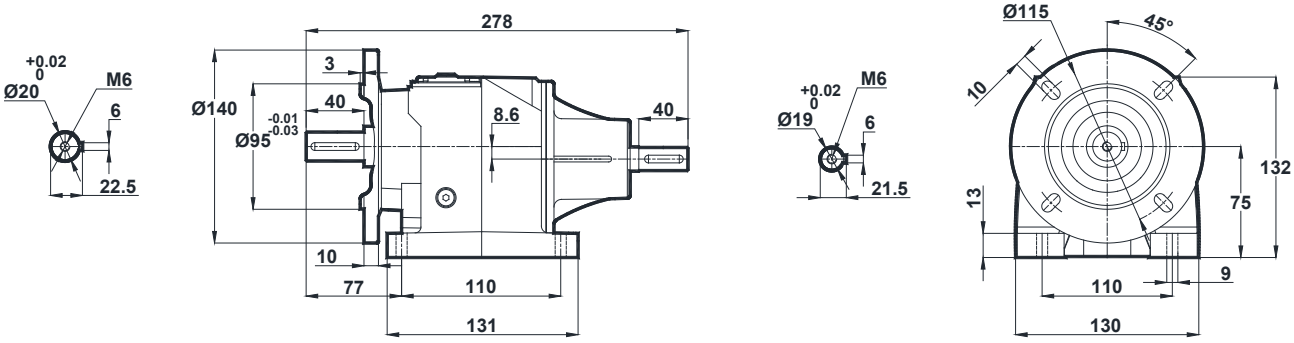

Optional Flange Dimensions

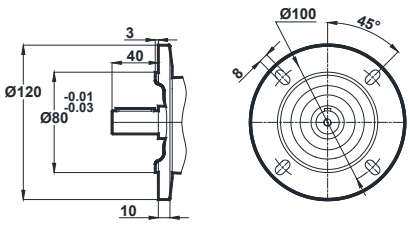

Opt. 1

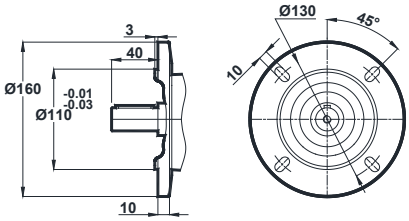

Opt. 2

Tapped center hole to DIN 332, sheet 2

MTF102
MTF103

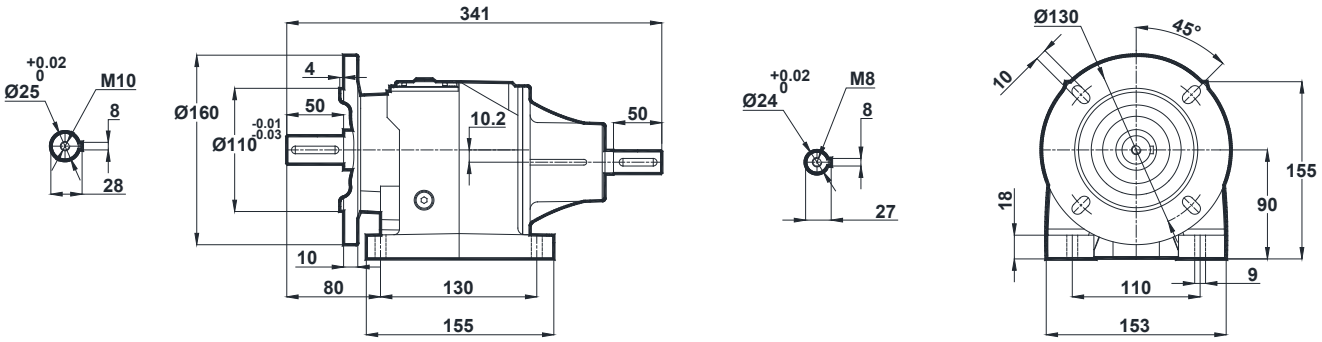

Optional Flange Dimensions

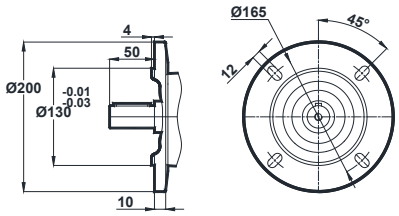

Opt. 1

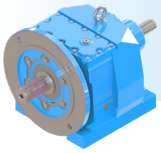

MTF - DIMENSION PAGES

Tapped center hole to DIN 332, sheet 2

MTF172
MTF173

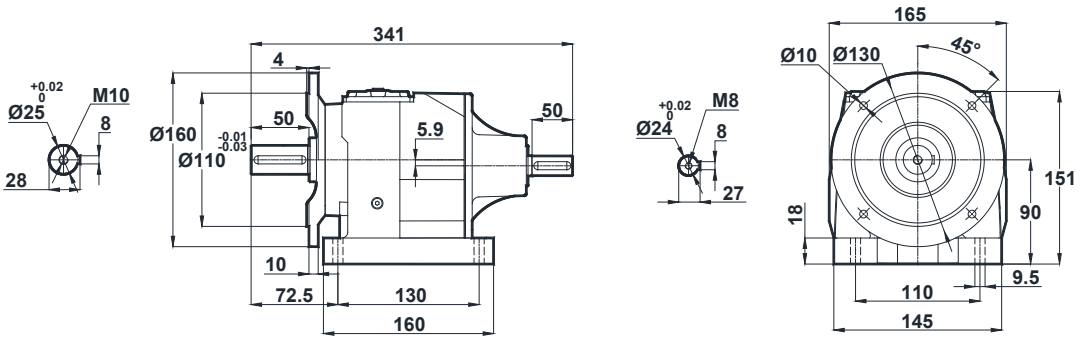

Optional Flange Dimensions

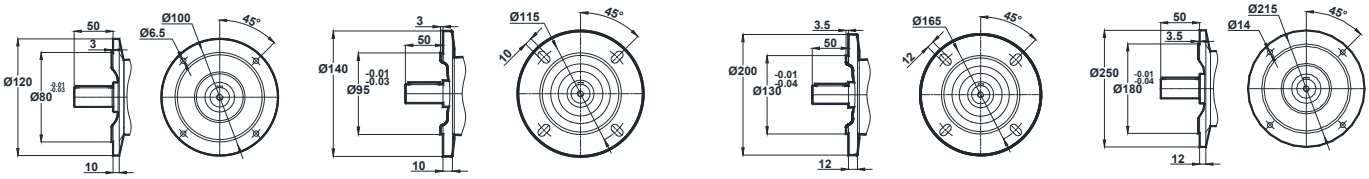

Opt. 1 **Opt. 2** **Opt. 3** **Opt. 4**

Tapped center hole to DIN 332, sheet 2

MTF202
MTF203

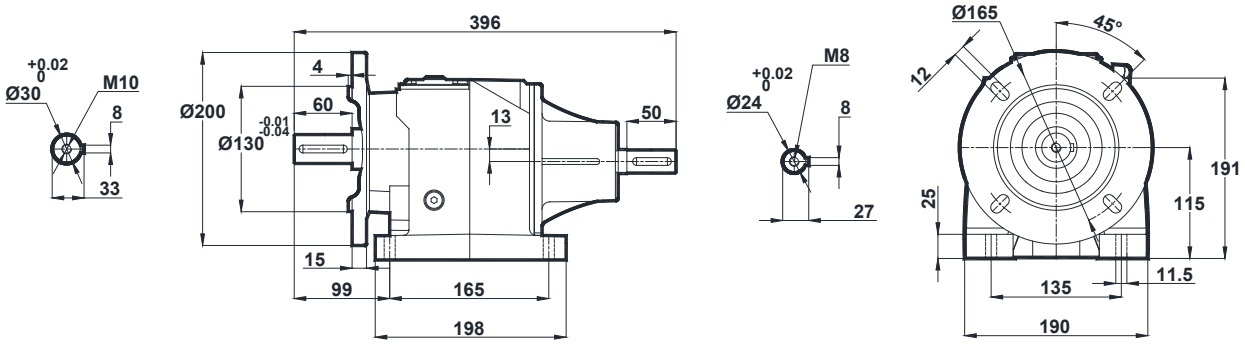

Optional Flange Dimensions

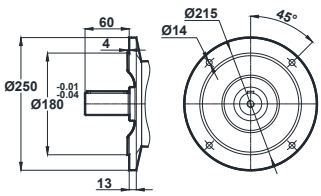

Opt. 1

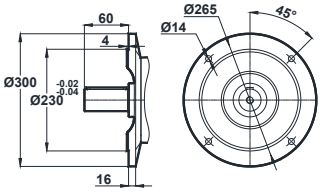

Opt. 2

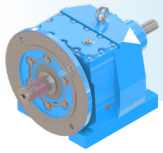

MTF - DIMENSION PAGES

Tapped center hole to DIN 332, sheet 2

MTF272
MTF273

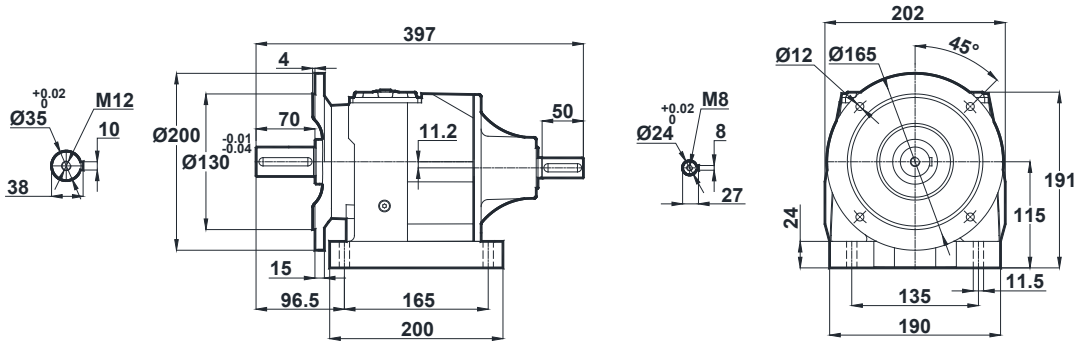

MTF275
MTF276

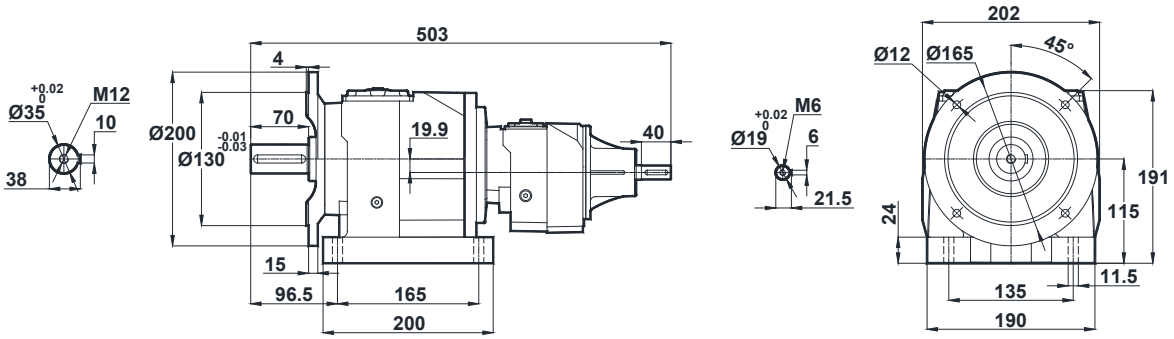

Optional Flange Dimensions

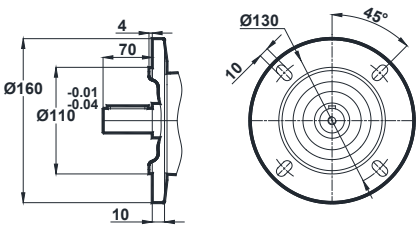

Opt. 1

Tapped center hole to DIN 332, sheet 2

MTF282
MTF283

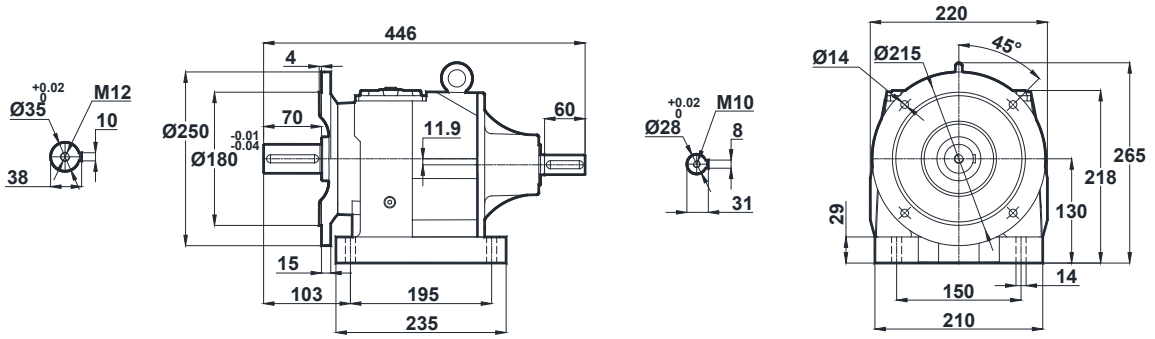

MTF284

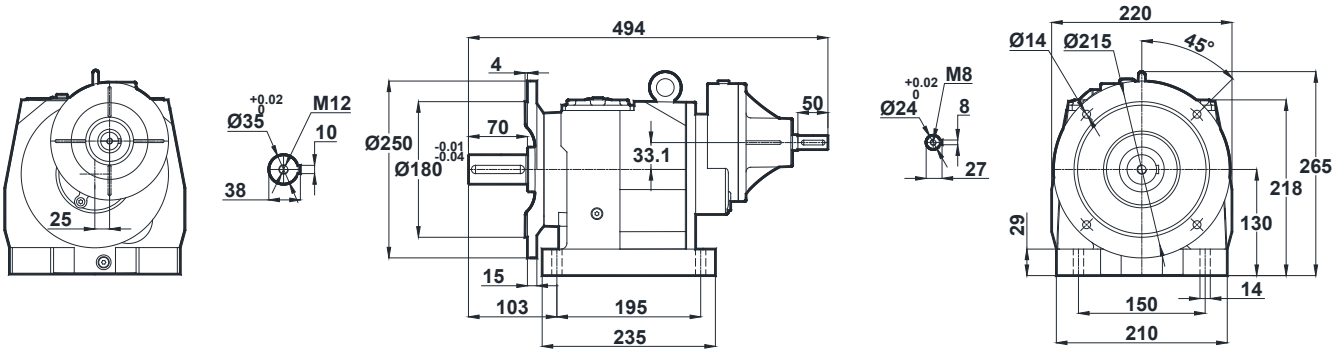

Optional Flange Dimensions

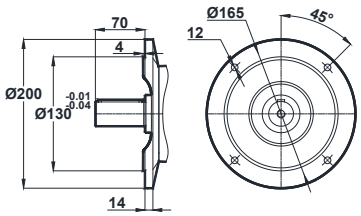

Opt. 1

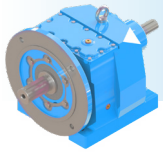

MTF - DIMENSION PAGES

Tapped center hole to DIN 332, sheet 2

MTF285
MTF286

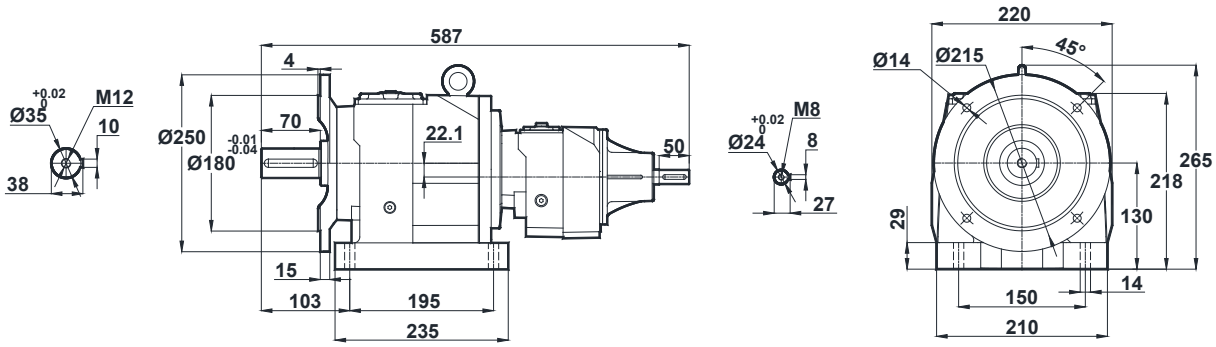

Optional Flange Dimensions

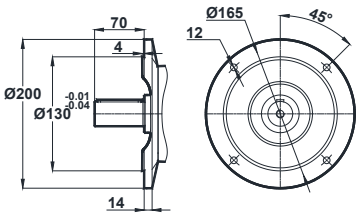

Opt. 1

Tapped center hole to DIN 332, sheet 2

MTF372
MTF373

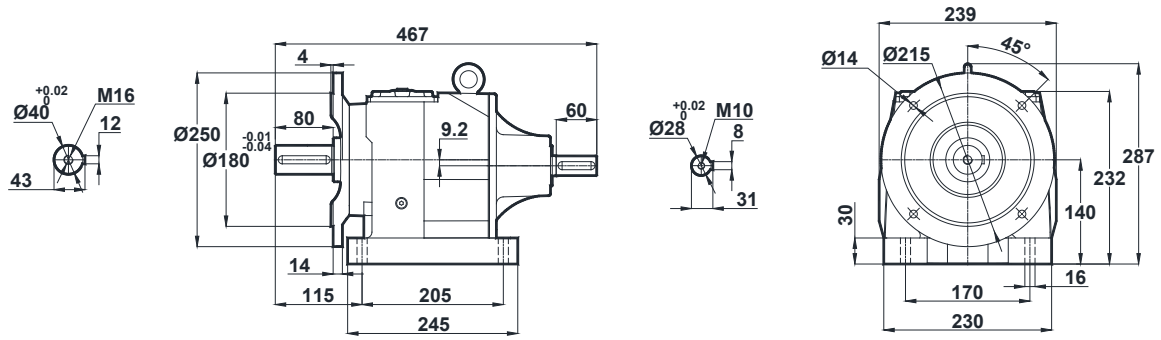

MTF374

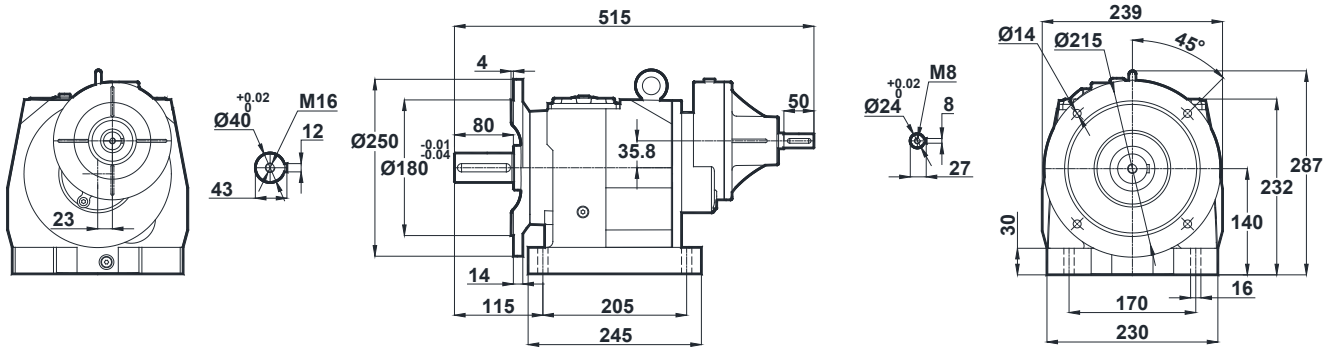

Optional Flange Dimensions

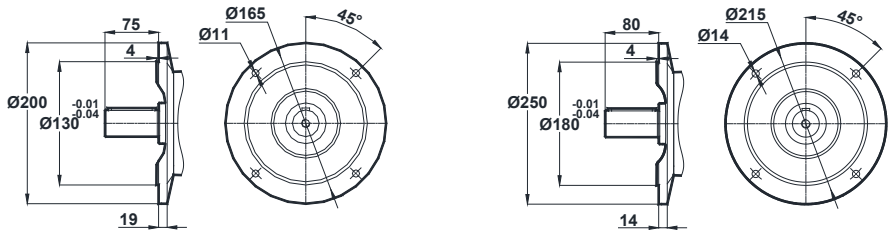

Opt. 1 **Opt. 2**

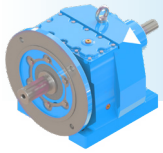

MTF - DIMENSION PAGES

Tapped center hole to DIN 332, sheet 2

MTF375
MTF376

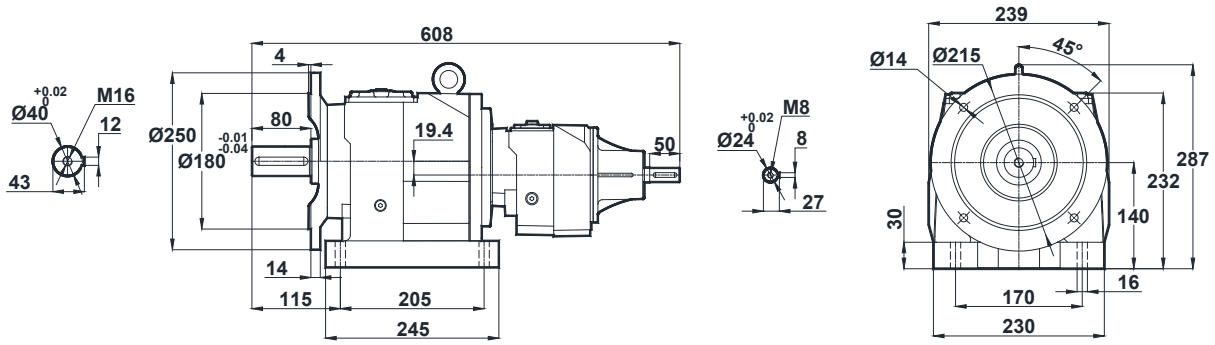

Optional Flange Dimensions

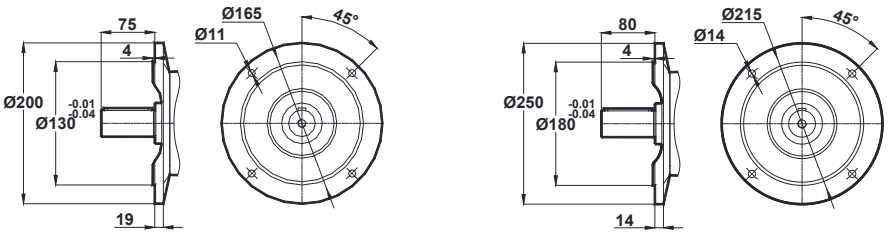

Opt. 1 **Opt. 2**

Tapped center hole to DIN 332, sheet 2

MTF472
MTF473

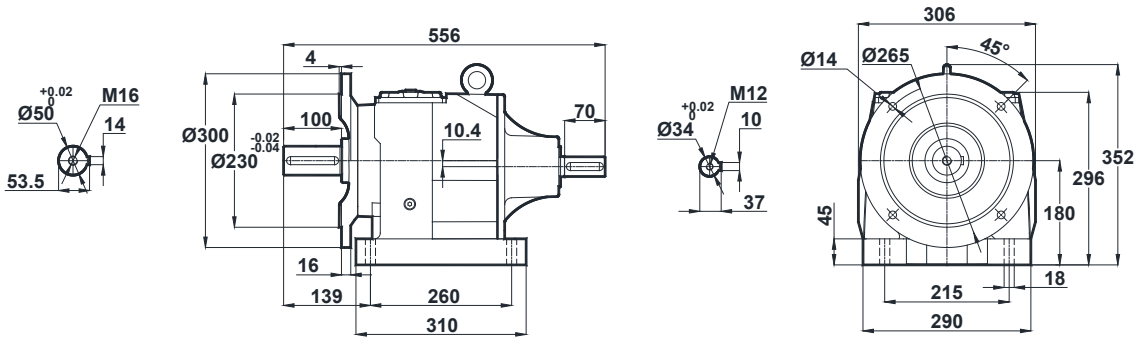

MTF474

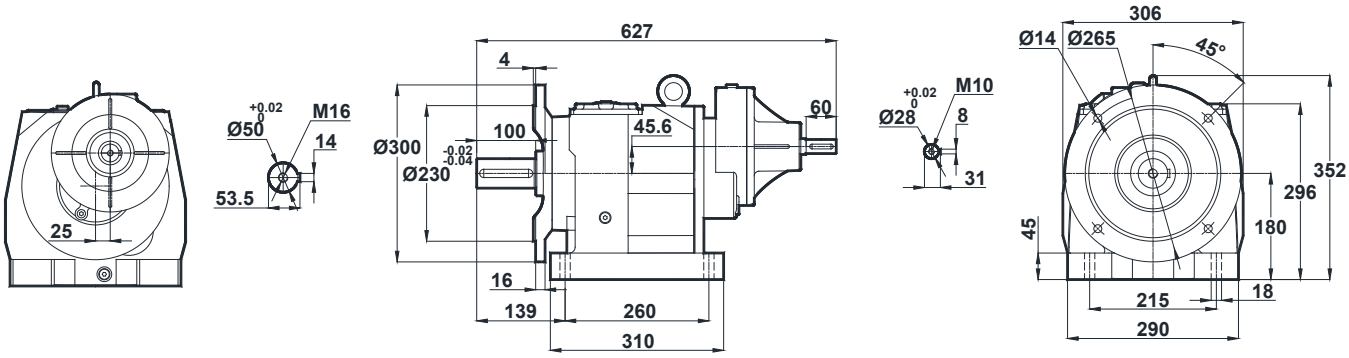

Optional Flange Dimensions

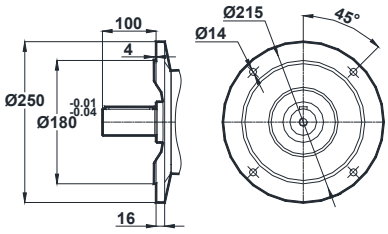

Opt. 1

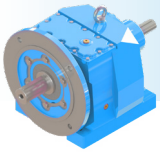

MTF - DIMENSION PAGES

Tapped center hole to DIN 332, sheet 2

MTF475
MTF476

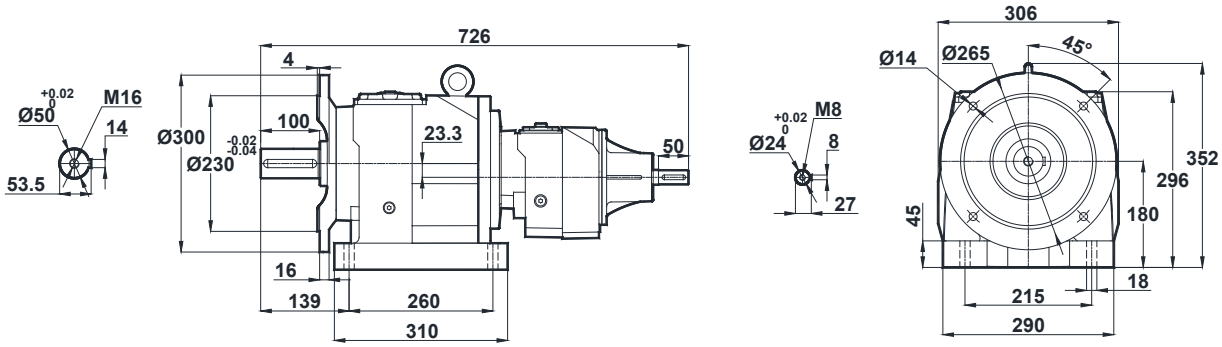

Optional Flange Dimensions

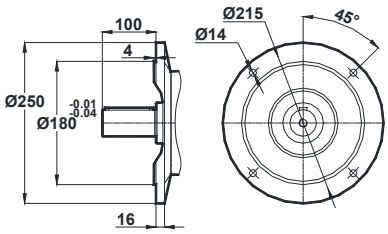

Opt. 1

DANA BREVINI®
Motion Systems

NTB - DIMENSION PAGES

Tapped center hole to DIN 332, sheet 2

NTB202
NTB203

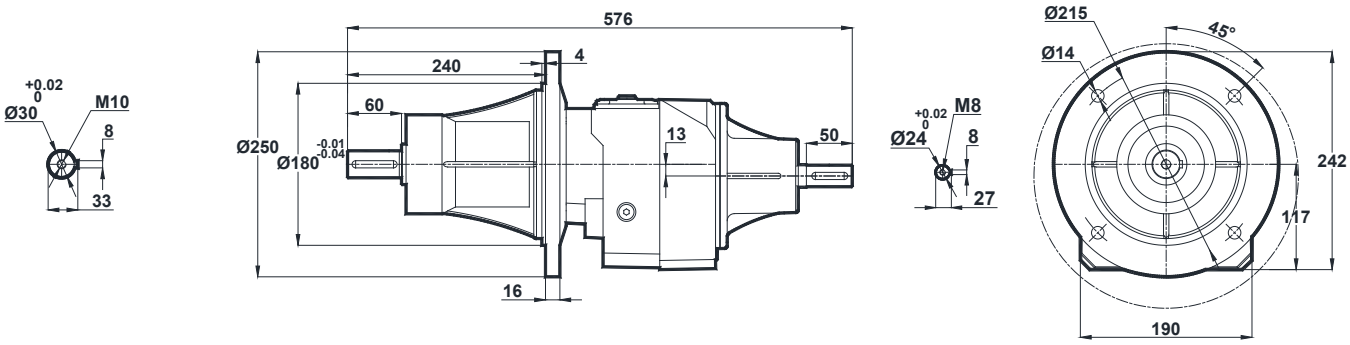

Tapped center hole to DIN 332, sheet 2

NTB272
NTB273

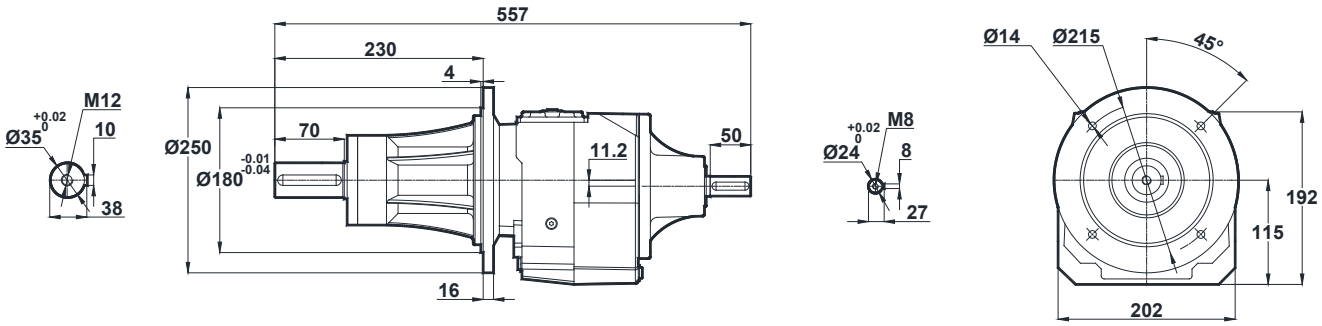

NTB275
NTB276

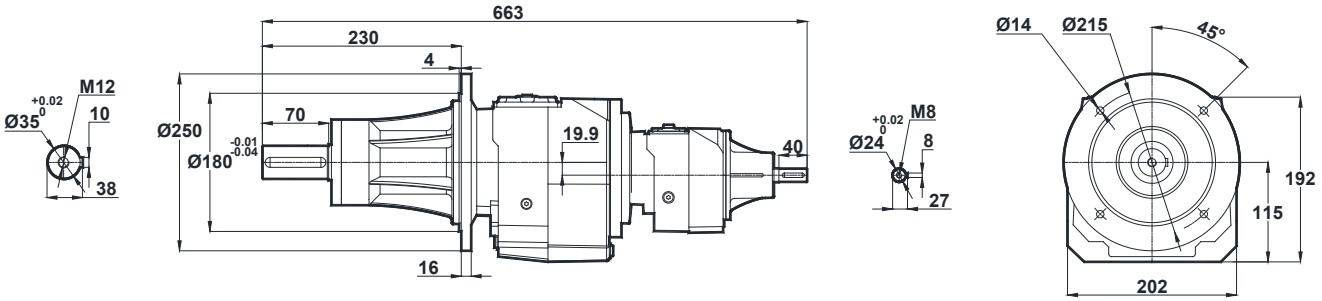

NTB - DIMENSION PAGES

Tapped center hole to DIN 332, sheet 2

NTB282
NTB283

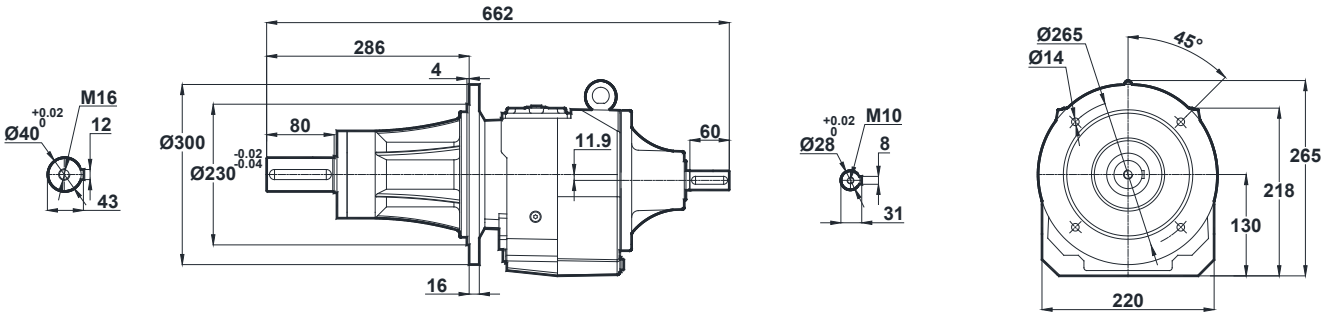

NTB284

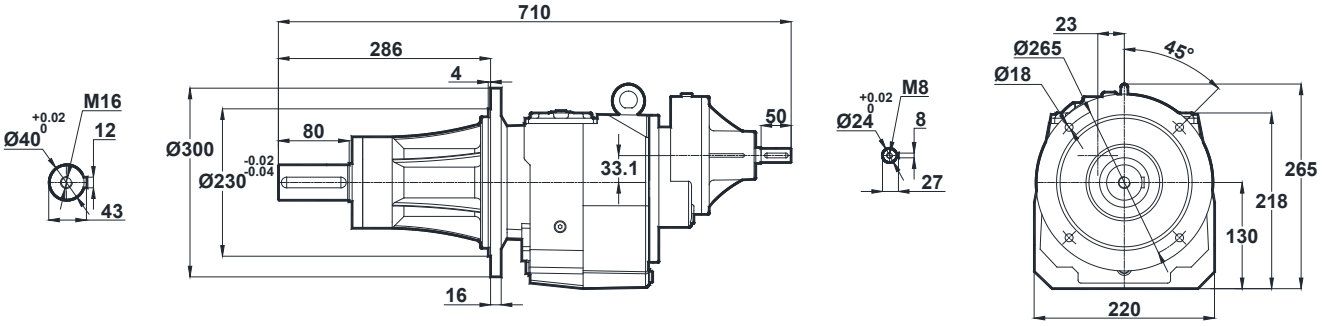

Tapped center hole to DIN 332, sheet 2

NTB285
NTB286

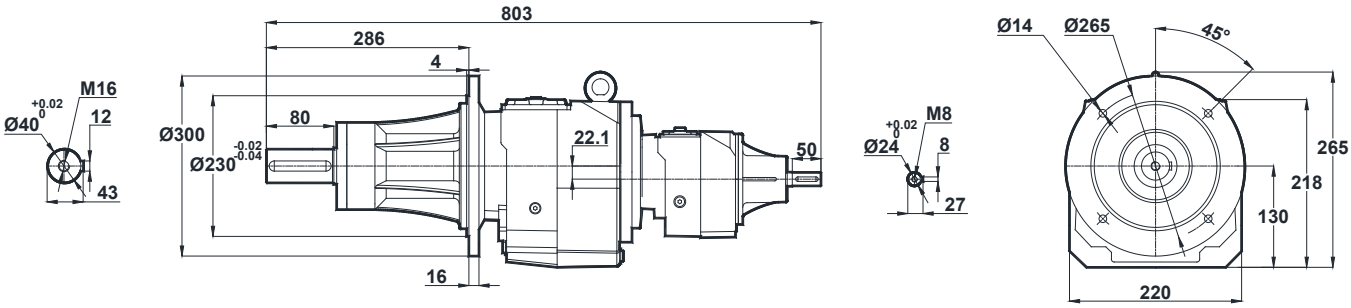

NTB - DIMENSION PAGES

Tapped center hole to DIN 332, sheet 2

NTB372
NTB373

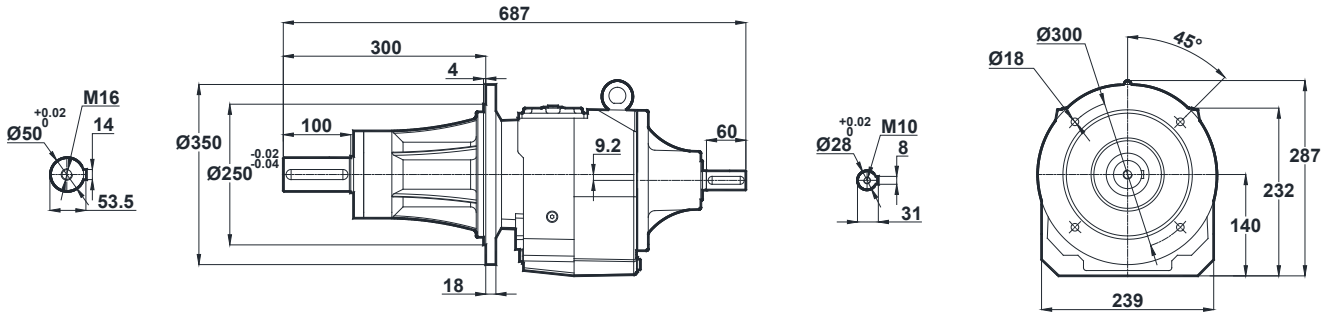

NTB374

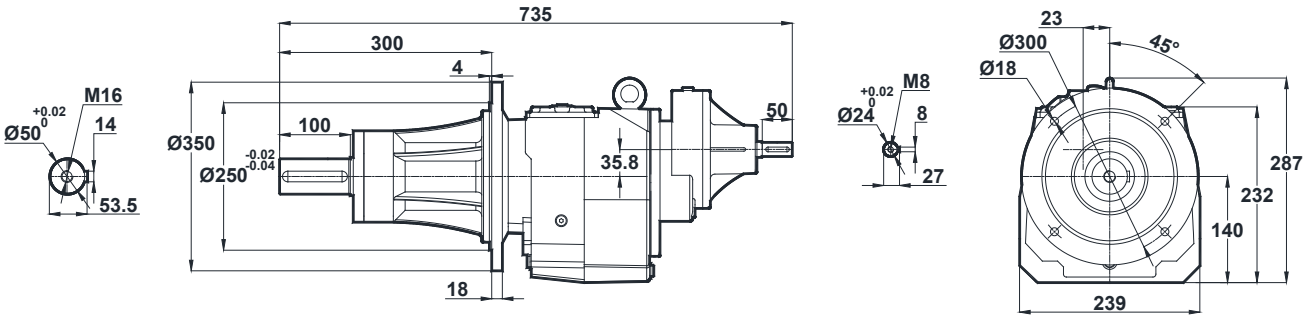

Tapped center hole to DIN 332, sheet 2

NTB375
NTB376

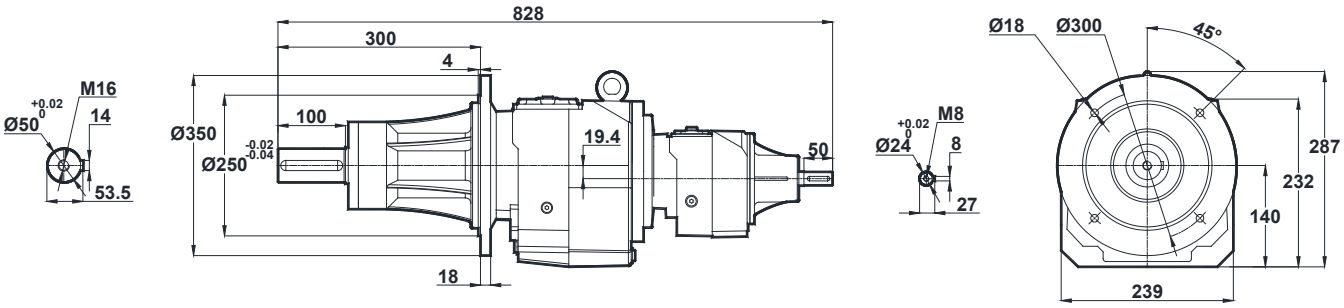

NTB - DIMENSION PAGES

Tapped center hole to DIN 332, sheet 2

NTB472
NTB473

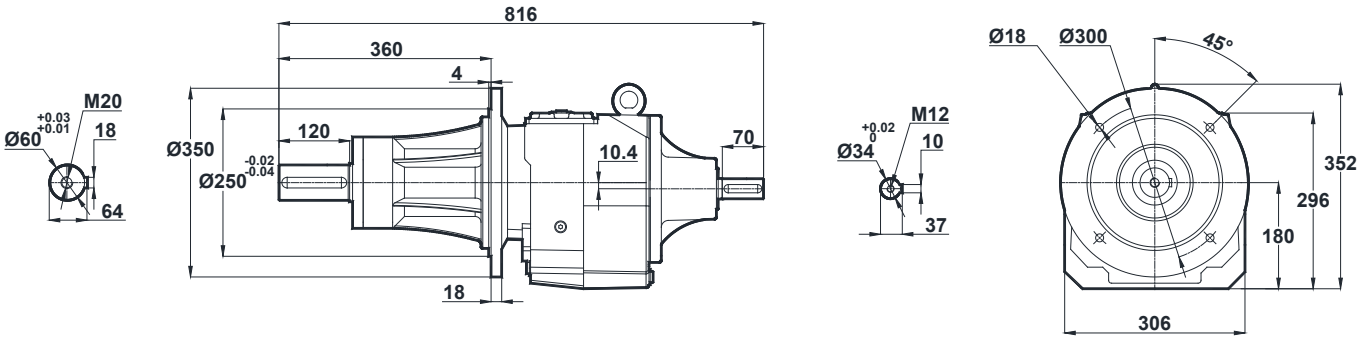

NTB474

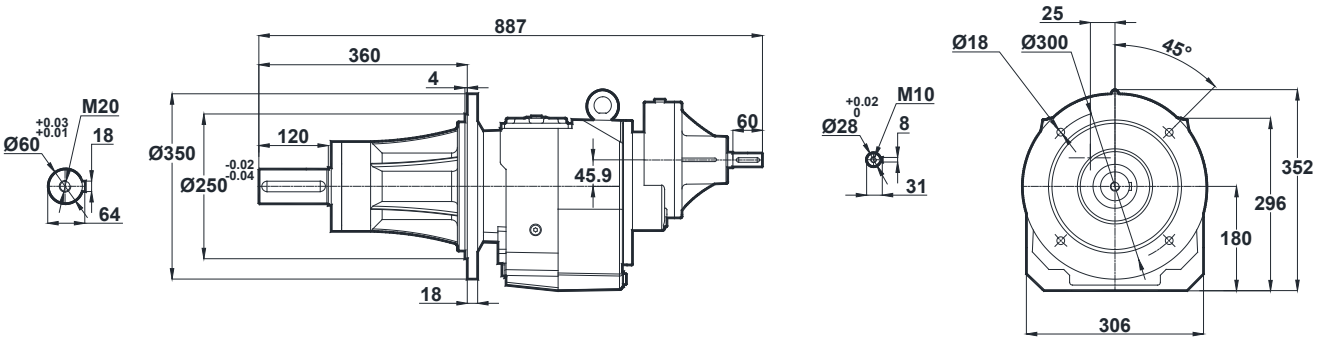

Tapped center hole to DIN 332, sheet 2

NTB475
NTB476

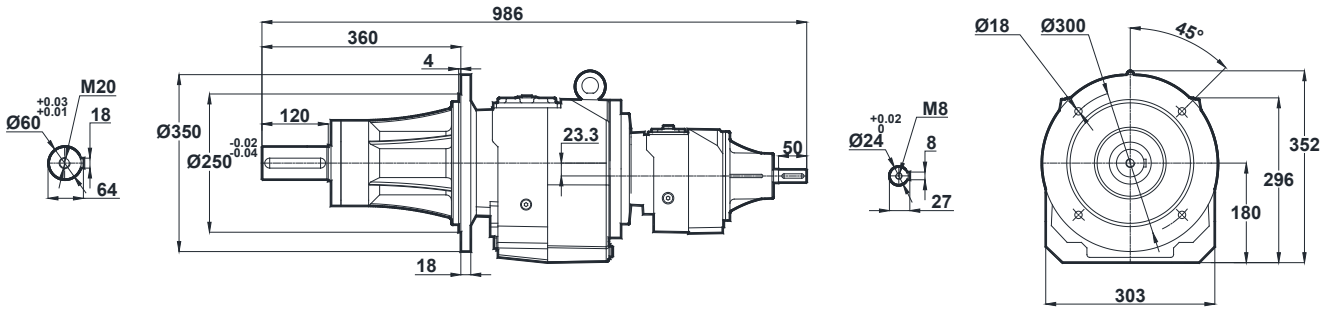

NTB - DIMENSION PAGES

Tapped center hole to DIN 332, sheet 2

NTB572
NTB573

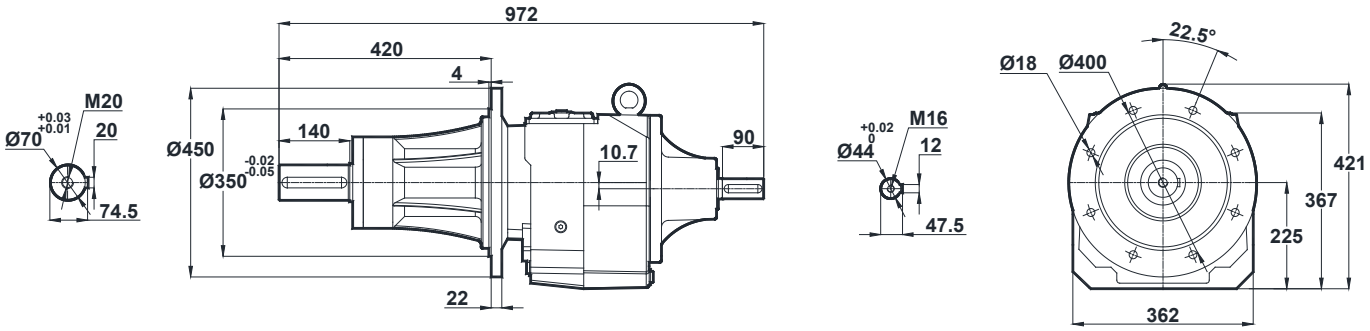

NTB574

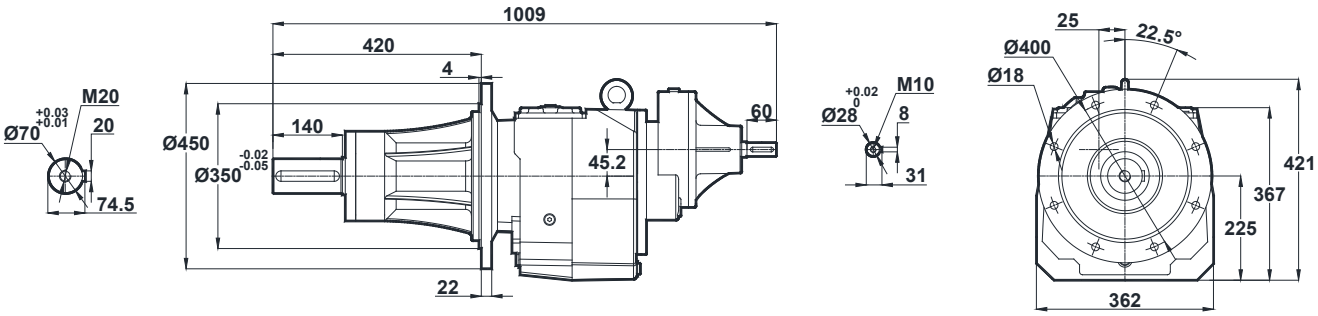

Tapped center hole to DIN 332, sheet 2

NTB575
NTB576

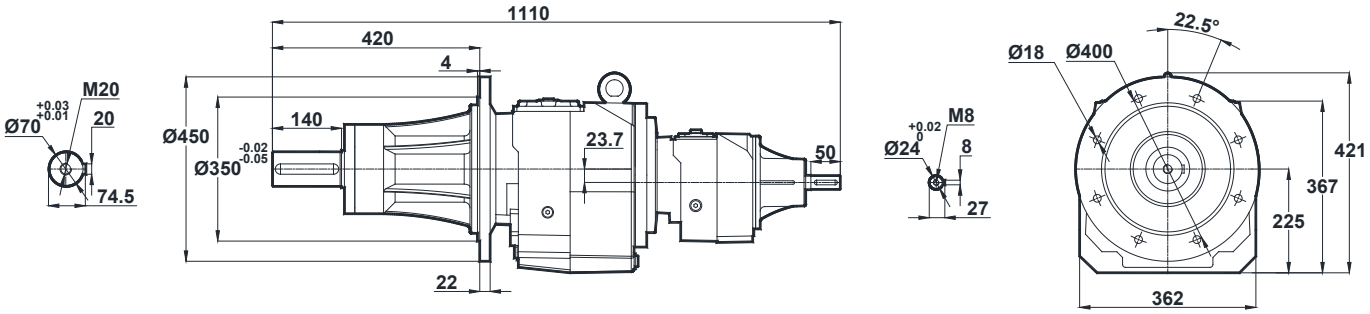

NTB - DIMENSION PAGES

Tapped center hole to DIN 332, sheet 2

NTB672
NTB673

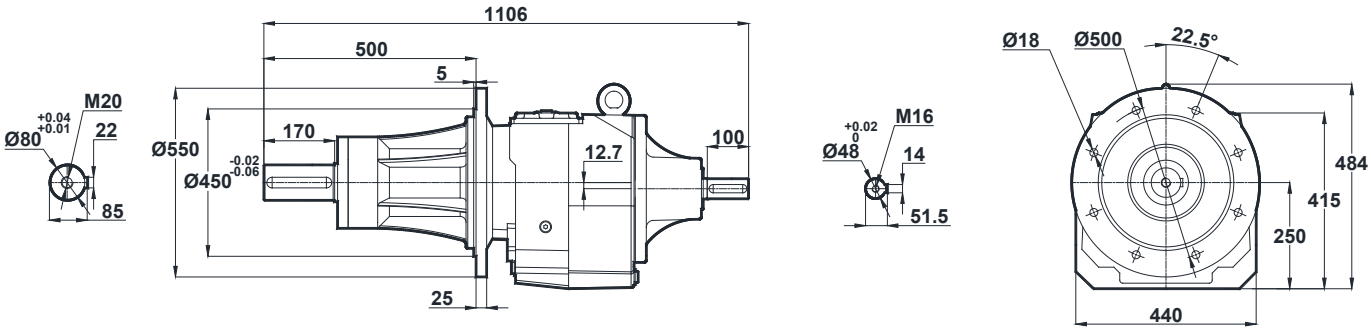

NTB674

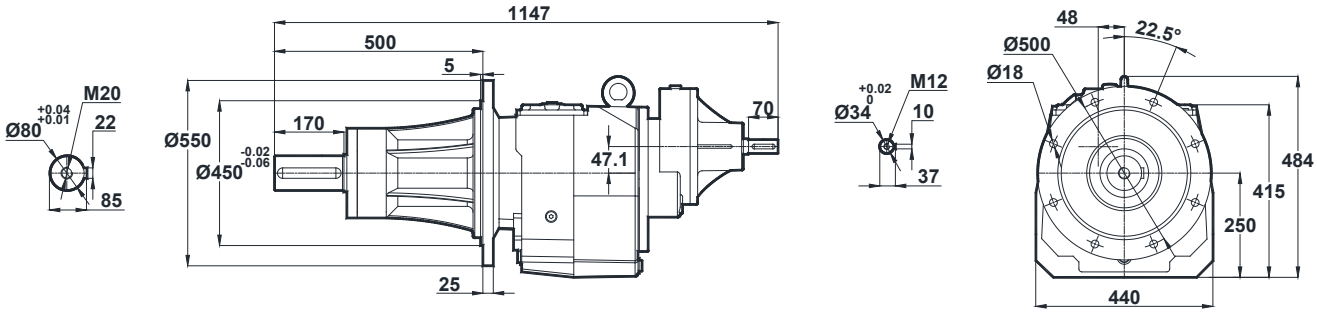

Tapped center hole to DIN 332, sheet 2

NTB675
NTB676

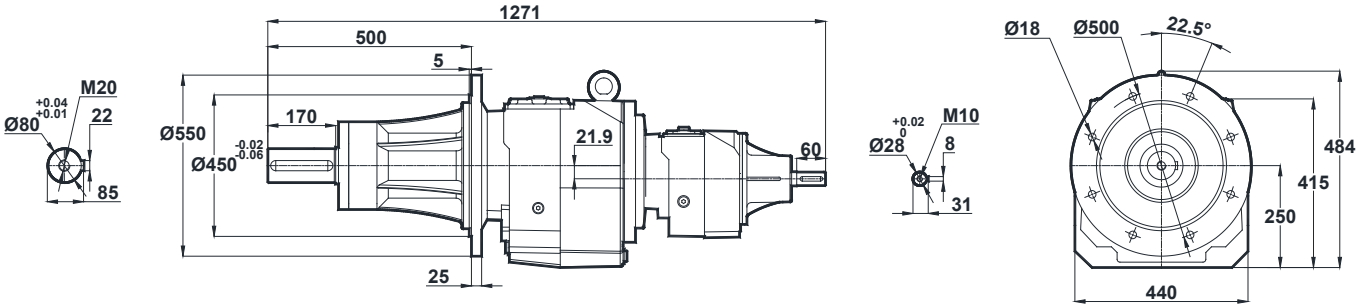

NTB - DIMENSION PAGES

Tapped center hole to DIN 332, sheet 2

NTB772
NTB773

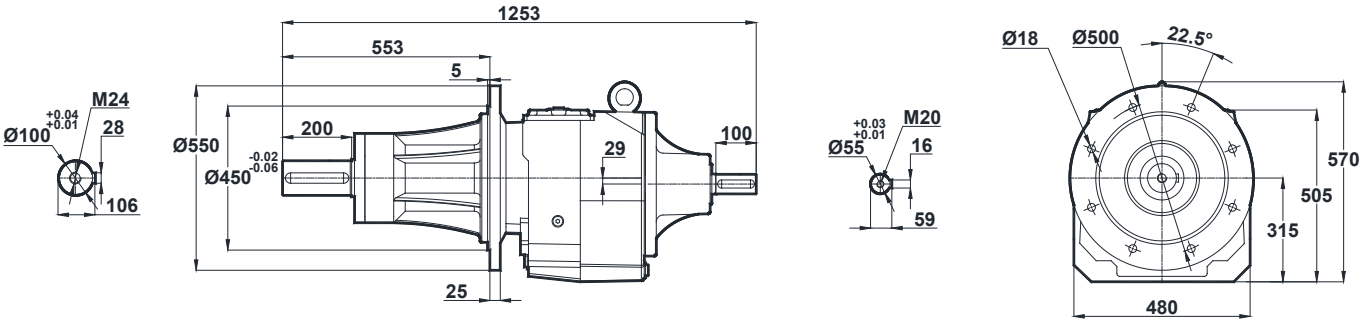

NTB774

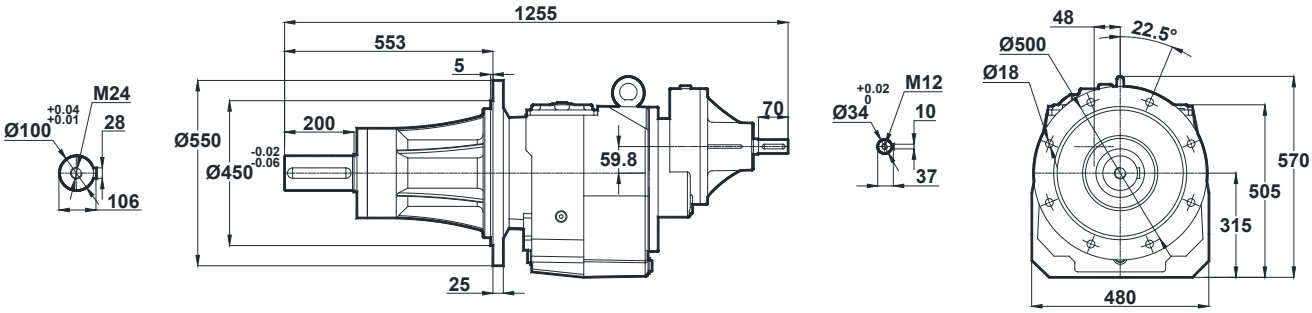

Tapped center hole to DIN 332, sheet 2

NTB775
NTB776

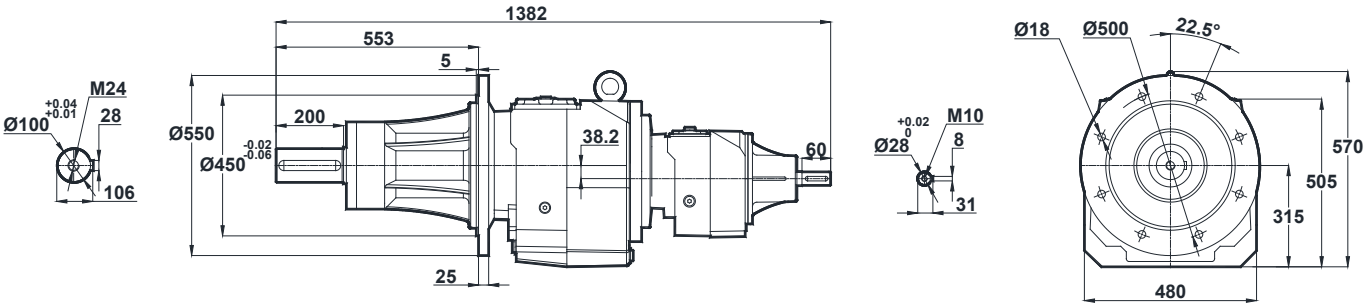

NTB - DIMENSION PAGES

Tapped center hole to DIN 332, sheet 2

NTB872
NTB873

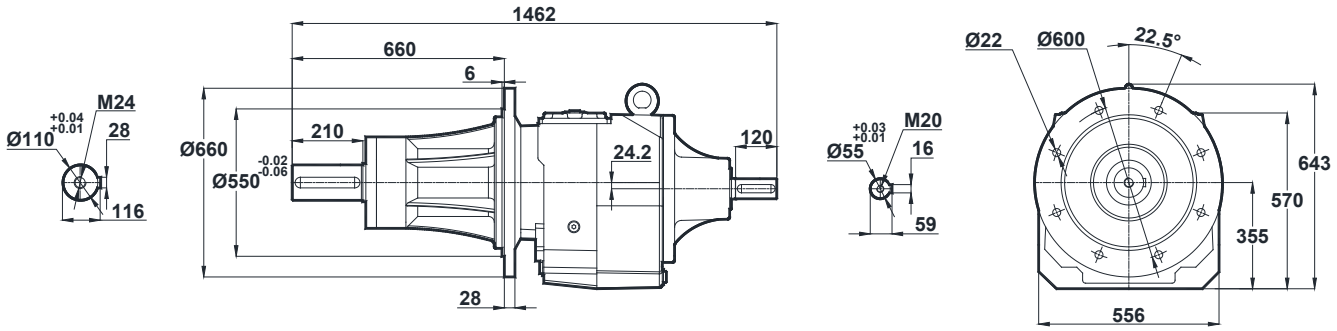

NTB874

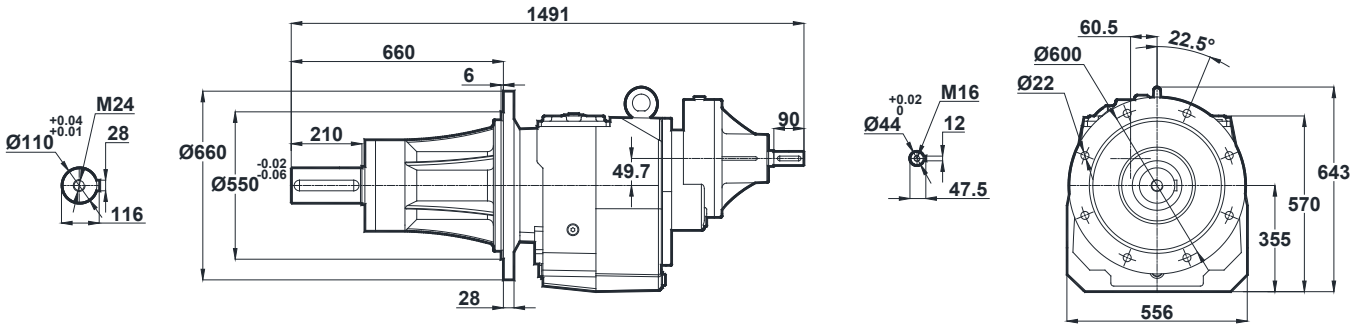

Tapped center hole to DIN 332, sheet 2

NTB875
NTB876

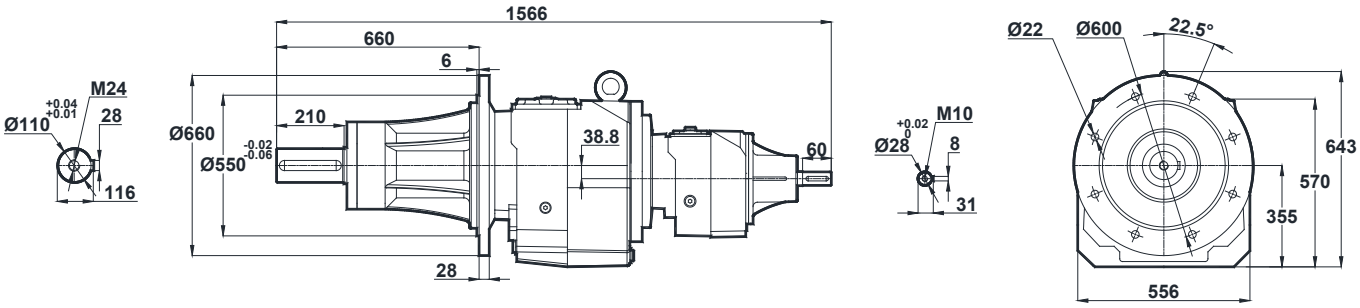

NTB - DIMENSION PAGES

Tapped center hole to DIN 332, sheet 2

NTB972
NTB973

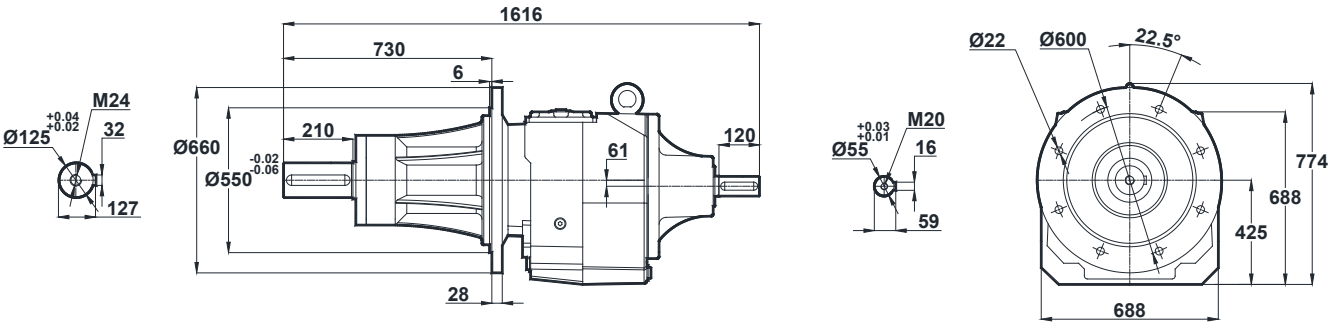

NTB974

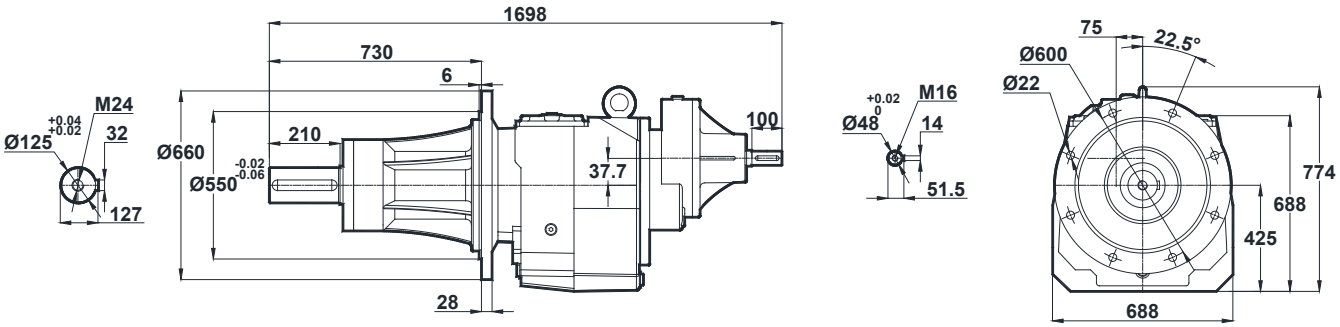

Tapped center hole to DIN 332, sheet 2

NTB975
NTB976

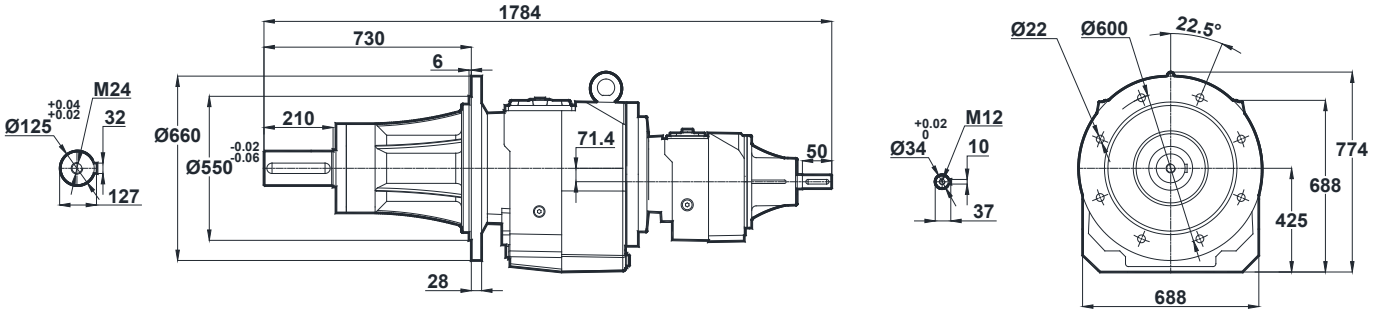

ELECTRIC MOTORS RATINGS AND PERFOMANCE

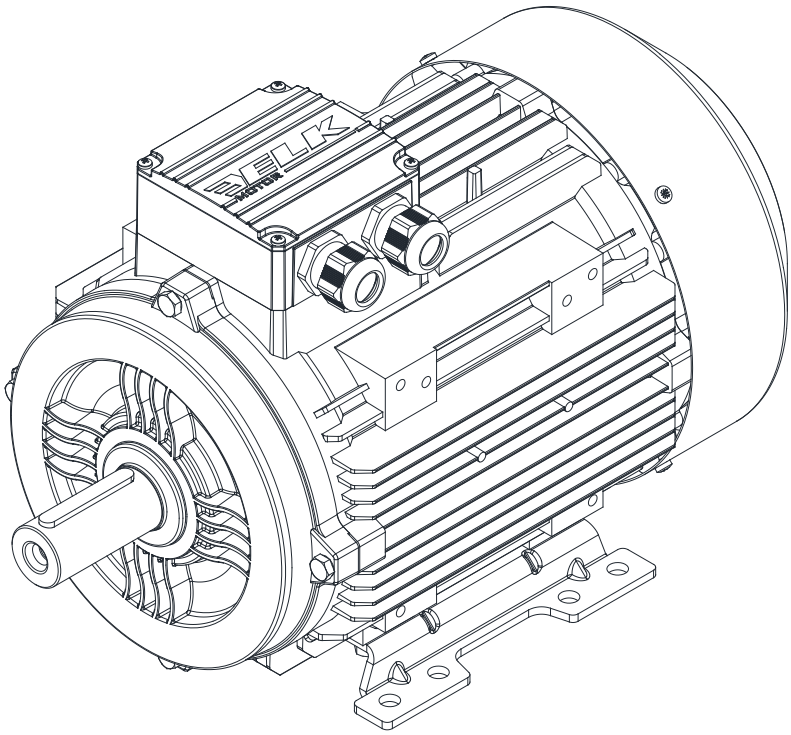

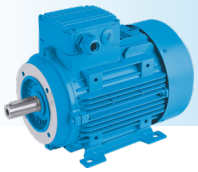

ELECTRIC MOTORS AND PERFORMANCE

400V 50Hz 3000 rpm

IE3

Type	Full-load Data								Starting Data		Breakdown Torque	Moment of Inertia	B3 Motor Weight	Noise Level
	Power	Speed	Current	Torque	Power Factor	Efficiency % η			Current	Torque				
	kW	rpm	A	Nm	Cosφ	4 / 4	3 / 4	1 / 2	I_A/I_N	M_A/M_N	M_K/M_N	kgm^2	kg	dB(A)
3E71M/2B	0.37	2830	0.86	1.25	0.81	76.6	77.0	75.0	6.0	2.8	3.0	0.00037	6.2	53
3E71M/2C	0.55	2830	1.19	1.86	0.84	79.4	80.2	78.8	6.1	2.9	3.3	0.00046	7.2	53
3E80M/2B	0.75	2880	1.59	2.49	0.84	80.7	82.0	81.5	6.7	3.0	3.6	0.00103	9.6	54
3E80M/2C	1.1	2880	2.26	3.64	0.85	82.7	83.0	82.4	6.8	3.1	3.8	0.00124	10.9	54
3E90S/2B	1.5	2900	2.97	4.94	0.86	84.8	85.4	84.2	7.6	3.1	3.9	0.00178	15.6	59
3E90L/2C	2.2	2900	4.25	7.24	0.87	85.9	86.8	86.1	7.2	3.0	3.8	0.00221	17.0	59
3E100L/2C	3	2910	5.58	9.85	0.89	87.1	87.6	86.9	7.9	3.0	4.1	0.00450	23.3	62
3E112M/2C	4	2915	7.28	13.1	0.90	88.1	88.8	88.2	7.5	2.6	3.9	0.00620	29.1	65
3E132S/2B	5.5	2945	9.9	17.83	0.90	89.2	89.0	88.6	8.9	2.9	3.9	0.01730	44.4	67
3E132S/2C	7.5	2945	13.2	24.32	0.91	90.1	90.5	89.7	8.4	2.6	4.0	0.02100	51.5	67
3E160M/2B	11	2950	19.7	35.6	0.88	91.2	91.0	90.5	8.0	2.6	3.9	0.03320	79.7	69
3E160M/2C	15	2950	25.9	48.55	0.91	91.9	92.1	91.6	8.9	3.1	4.2	0.03910	86.0	69
3E160L/2D	18.5	2945	31.7	60	0.91	92.4	92.7	92.3	8.9	3.1	4.2	0.04410	96.7	69
3E180M/2B	22	2957	38.1	71.05	0.90	92.7	92.9	92.0	8.6	2.6	3.9	0.06300	178	70
3E200L/2B	30	2970	52	96.46	0.89	93.6	93.8	93.6	8.9	3.2	3.5	0.16200	245	72
3E200L/2C	37	2970	62.6	119	0.91	93.7	93.8	93.4	9.3	3.2	3.4	0.17500	270	72
3E225M/2C	45	2975	75.6	144.4	0.91	94.3	94.6	94.0	9.8	3.5	3.9	0.25400	335	74
3E250M/2C	55	2970	93.3	176.9	0.90	94.4	94.8	94.5	8.9	3.3	3.4	0.38000	422	75
3E280S/2B	75	2980	127	240.35	0.90	94.7	94.7	94.0	7.5	2.7	3.2	0.79000	560	76
3E280M/2C	90	2985	150	287.94	0.91	95.0	95.1	94.5	7.6	2.7	3.1	0.90000	630	76
3G315S/2	110	2985	186	352	0.90	95.2	95.2	94.0	8.0	2.5	3.0	1.20000	742	76
3G315M/2	132	2985	223	422	0.90	95.4	95.4	94.1	8.0	2.4	3.5	1.40000	812	79
3G315L/2a	160	2985	265	512	0.91	95.6	95.6	94.2	8.0	2.5	3.0	1.50000	912	79

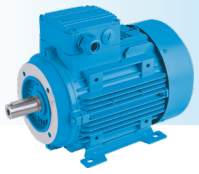

400V 50Hz 1500 rpm

IE3

Type	Full-load Data								Starting Data		Breakdown Torque	Moment of Inertia	B3 Motor Weight	Noise Level
	Power	Speed	Current	Torque	Power Factor	Efficiency % η			Current	Torque				
	kW	rpm	A	Nm	Cosφ	4 / 4	3 / 4	1 / 2	I_A/I_N	M_A/M_N	M_K/M_N	kgm^2	kg	dB(A)
3E71M/4C	0.25	1435	0.67	1.66	0.71	76.0	75.4	71.5	5.4	2.2	3.0	0.00082	6.8	45
3E71M/4D	0.37	1435	0.97	2.46	0.70	78.5	78.2	75.0	5.5	2.2	3.1	0.00093	7.5	45
3E80M/4C	0.55	1450	1.34	3.62	0.73	80.8	80.4	77.0	5.9	2.1	3.1	0.00200	10.5	50
3E80M/4D	0.75	1450	1.77	4.94	0.74	82.5	82.3	80.0	6.2	2.5	3.4	0.00227	11.6	50
3E90S/4C	1.1	1450	2.46	7.25	0.76	84.5	84.3	82.0	7.0	2.6	3.6	0.00355	16.3	51
3E90L/4D	1.5	1450	3.3	9.88	0.77	85.3	85.2	83.0	7.2	2.8	3.8	0.00410	18.0	51
3E100L/4C	2.2	1450	4.65	14.49	0.79	86.7	87.2	86.0	7.2	2.8	3.6	0.00780	24.4	53
3E100L/4D	3	1450	6.26	19.76	0.79	87.7	88.0	87.0	7.2	2.8	3.6	0.00890	26.7	53
3E112M/4D	4	1460	8.05	26.16	0.81	88.6	88.4	87.5	7.4	2.8	3.8	0.01430	33.9	58
3E132S/4C	5.5	1460	10.65	36	0.83	89.6	90.2	90.0	7.4	2.8	3.4	0.03060	53.4	61
3E132M/4D	7.5	1465	14.4	48.9	0.83	90.4	90.4	89.4	7.9	3.0	3.8	0.03420	59.5	61
3E160M/4C	11	1470	21	71.46	0.83	91.5	92.1	91.7	7.6	2.8	3.3	0.07010	89.2	63
3E160L/4D	15	1470	28.7	97.45	0.82	92.1	92.4	91.9	7.8	2.8	3.6	0.08600	97.5	63
3E180M/4C	18.5	1475	35	119.8	0.82	92.6	93.2	92.9	7.7	3.0	3.3	0.12900	173	64
3E180L/4D	22	1470	41.4	142.92	0.82	93.0	93.7	93.7	8.0	3.0	3.4	0.14700	187	64
3E200L/4D	30	1475	54.5	194.2	0.85	93.6	94.1	94.0	8.0	3.0	3.4	0.28400	258	65
3E225S/4C	37	1478	65.7	239	0.87	93.9	94.5	94.5	8.3	3.2	3.3	0.38200	320	66
3E225M/4D	45	1477	80	290.9	0.86	94.2	94.7	94.7	8.6	3.3	3.2	0.44100	352	67
3E250M/4D	55	1482	95.3	354.4	0.88	94.6	95.1	95.2	8.7	3.3	3.2	0.73400	470	68
3E280S/4C	75	1485	129.5	482.3	0.86	95.0	95.3	95.1	7.9	3.0	3.2	1.40000	646	69
3E280M/4D	90	1485	155.5	578.8	0.86	95.2	95.7	95.7	7.9	3.1	3.2	1.50000	670	70
3G315S/4	110	1487	194	706	0.86	95.4	95.2	95.0	7.4	2.4	3.0	2.5000	861	74
3G315M/4a	132	1488	226	847	0.88	95.6	95.4	95.3	7.4	2.4	3.0	2.8000	882	74
3G315L/4b	160	1488	275	1027	0.88	95.8	95.6	95.6	6.9	2.2	2.9	3.0000	930	74

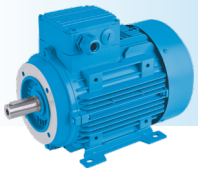

ELECTRIC MOTORS AND PERFORMANCE

400V 50Hz 1000 rpm

IE3

Type	Full-load Data								Starting Data		Breakdown Torque	Moment of Inertia	B3 Motor Weight	Noise Level
	Power	Speed	Current	Torque	Power Factor	Efficiency % η			Current	Torque				
	kW	rpm	A	Nm	Cosφ	4 / 4	3 / 4	1 / 2	I_A/I_N	M_A/M_N	M_K/M_N	kgm^2	kg	dB(A)
3E71M/6C	0.18	930	0.55	1.85	0.69	68.0	67.4	62.6	3.6	2.0	2.4	0.00096	6.7	41
3E71M/6D	0.25	930	0.77	2.57	0.67	70.0	69.7	66.0	3.6	2.2	2.5	0.00116	7.5	41
3E80M/6B	0.37	930	1.03	3.8	0.70	74.0	73.8	70.0	4.4	2.1	2.6	0.00202	9.8	43
3E80M/6C	0.55	935	1.47	5.62	0.70	77.2	77.3	74.4	4.3	2.2	2.7	0.00228	10.6	43
3E90S/6B	0.75	945	1.96	7.58	0.70	78.9	79.2	77.6	4.7	2.2	2.7	0.00354	14.6	46
3E90L/6C	1.1	940	2.75	11.2	0.71	81.0	80.8	79.4	5.0	2.2	2.7	0.00428	17.0	46
3E100L/6B	1.5	955	3.5	15	0.75	82.5	82.7	81.4	5.3	2.1	2.8	0.00820	22.5	50
3E112M/6B	2.2	960	4.95	21.9	0.76	84.3	84.5	83.5	5.5	2.2	3.0	0.01320	27.2	56
3E132S/6B	3	970	6.55	29.4	0.77	85.6	85.5	84.5	6.2	2.1	3.0	0.03050	46.5	58
3E132M/6C	4	970	8.52	39.4	0.78	86.8	87.0	85.5	6.2	2.2	3.0	0.03500	51.0	58
3E132M/6D	5.5	965	11.55	54.4	0.78	88.0	88.9	88.5	6.2	2.2	3.0	0.03940	56.0	58
3E160M/6D	7.5	972	15.55	73.8	0.78	89.1	89.4	88.4	6.3	2.6	3.0	0.07870	96.0	61
3E160L/6E	11	972	22.9	108.07	0.77	90.3	90.9	90.5	6.6	2.9	3.3	0.08580	104	62
3E180L/6E	15	975	30.80	147.92	0.77	91.2	91.6	91.0	6.7	2.9	3.1	0.15300	187	63
3E200L/6C	18.5	977	36.4	180.8	0.80	91.7	91.8	91.8	6.1	2.6	2.6	0.36100	225	64
3E200L/6D	22	978	42.5	214.8	0.81	92.2	92.9	93.0	6.2	2.6	2.7	0.39400	245	64
3E225M/6C	30	985	57.6	290.8	0.81	92.9	92.9	92.6	6.6	2.6	2.7	0.60000	326	65
3E250M/6C	37	988	68.8	357.6	0.83	93.4	93.6	93.5	6.8	2.7	2.68	0.82000	432	65
3E280S/6B	45	989	82.5	434.5	0.84	93.7	93.9	93.2	6.8	2.9	2.8	1.45000	540	65
3E280M/6C	55	989	100.4	531	0.84	94.1	94.4	93.5	6.9	2.9	2.9	1.6500	575	65
3G315S/6	75	992	140	722	0.82	94.6	94.6	94.4	7.2	2.7	3.0	2.9000	805	72
3G315M/6a	90	992	166	866	0.82	94.9	94.9	94.5	7.2	2.7	3.0	3.5000	860	72
3G315M/6b	110	992	198	1059	0.84	95.1	95.1	94.9	7.2	2.7	3.0	4.2000	980	72
3G315L/6	132	992	235	1271	0.85	95.4	95.4	95.2	7.2	2.7	3.0	4.3000	1150	72
3G355M/6a	160	993	197	1539	0.82	95.6	95.6	95.0	7.0	2.4	3.2	6.8000	1185	72

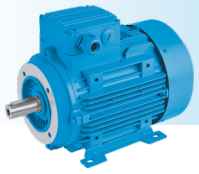

400V 50Hz 3000 rpm

IE2

Type	Full-load Data								Starting Data		Breakdown Torque	Moment of Inertia	B3 Motor Weight	Noise Level
	Power	Speed	Current	Torque	Power Factor	Efficiency % η			Current	Torque				
	kW	rpm	A	Nm	Cosφ	4 / 4	3 / 4	1 / 2	I_A/I_N	M_A/M_N	M_K/M_N	kgm^2	kg	dB(A)
G56/2b *	0.12	2800	0.35	0.41	0.74	64.5	64.1	56.9	4.2	2.5	2.8	0.00012	2.8	42
G63/2a *	0.18	2820	0.5	0.61	0.73	64.4	64.2	57.7	4.6	2.9	2.9	0.00011	3.6	52
G63/2b *	0.25	2840	0.67	0.84	0.63	67.3	67.1	60.9	4.5	2.5	2.9	0.00013	4.0	52
2E71M/2A	0.37	2790	0.9	1.26	0.80	74.2	74.5	72.5	5.0	2.5	2.8	0.00031	5.5	54
2E71M/2B	0.55	2790	1.27	1.88	0.82	75.8	77.0	76.0	5.0	2.8	2.9	0.00037	6.3	54
2E80M/2A	0.75	2850	1.67	2.51	0.83	78.0	79.0	77.5	5.7	2.5	3.0	0.00089	8.7	56
2E80M/2B	1.1	2850	2.36	3.69	0.84	80.1	81.3	80.7	5.8	2.7	3.1	0.00103	9.7	56
2E90S/2A	1.5	2880	3.17	4.98	0.83	82.5	82.6	82.0	6.0	2.6	3.3	0.00152	14.1	60
2E90L/2B	2.2	2860	4.48	7.35	0.85	83.2	85.0	85.0	6.0	2.6	3.1	0.00178	15.5	60
2E100L/2B	3	2890	5.8	9.91	0.88	84.8	85.2	84.7	7.0	2.6	3.4	0.00380	20.8	63
2E112M/2A	4	2910	7.6	13.13	0.88	86.5	87.1	86.8	7.0	2.4	3.6	0.00530	25.7	66
2E132S/2A	5.5	2935	10.2	17.9	0.88	88.2	88.4	87.6	7.9	2.8	3.9	0.01550	41	68
2E132S/2B	7.5	2925	13.6	24.5	0.90	88.5	88.8	88.6	7.6	2.6	3.9	0.01730	45.2	68
2E160M/2A	11	2940	19.6	35.73	0.90	89.8	90.0	89.0	7.4	2.7	3.6	0.02920	71.4	70
2E160M/2B	15	2935	26.9	48.8	0.89	90.3	91.0	90.7	7.0	2.6	3.5	0.03320	77.0	70
2E160L/2C	18.5	2935	32.2	60.19	0.91	91.1	91.5	91.0	8.2	2.9	3.8	0.03910	89.0	70
2E180M/2A	22	2955	39.0	71.1	0.89	91.4	91.6	90.6	7.9	2.6	3.6	0.06300	163	71
2E200L/2A	30	2965	52	96.63	0.90	92.4	92.7	92.2	8.0	2.9	3.1	0.14600	230	74
2E200L/2B	37	2965	64	119.2	0.90	92.7	93.2	93.0	8.4	3.1	3.3	0.16200	240	75
2E225M/2B	45	2970	77.4	144.7	0.90	93.2	93.5	93.0	8.6	2.7	3.7	0.22000	310	75
2E250M/2B	55	2970	94.5	176.8	0.90	93.3	93.6	93.1	7.9	2.7	3.6	0.32800	388	77
2E280S/2A	75	2978	128	240.5	0.90	93.8	94.0	93.0	7.9	2.7	3.0	0.70000	510	77
2E280M/2B	90	2980	153	288.4	0.90	94.1	94.2	93.1	7.5	2.8	3.2	0.79000	570	77
2G315S/2	110	2980	192	352	0.88	94.3	94.3	92.8	7.0	2.5	3.0	1.00000	742	79
2G315M/2a	132	2980	224	423	0.90	94.6	94.5	93.3	8.0	2.5	3.0	1.20000	812	79
2G315M/2b	160	2980	266	513	0.92	94.8	94.8	93.4	7.8	2.5	3.2	1.40000	912	79

*** : IE1 Data**

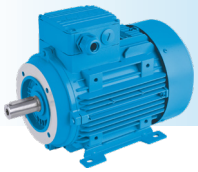

ELECTRIC MOTORS AND PERFORMANCE

400V 50Hz 1500 rpm

IE2

Type	Full-load Data								Starting Data		Breakdown Torque	Moment of Inertia	B3 Motor Weight	Noise Level
	Power	Speed	Current	Torque	Power Factor	Efficiency % η			Current	Torque				
	kW	rpm	A	Nm	Cosφ	4 / 4	3 / 4	1 / 2	I_A/I_N	M_A/M_N	M_K/M_N	kgm^2	kg	dB(A)
G63/4a *	0.12	1365	0.41	0.84	0.74	57.1	57.1	53.3	3.1	2.0	2.2	0.00017	3.4	43
G63/4b *	0.18	1340	0.6	1.28	0.73	59.7	59.7	55.8	2.9	2.0	2.0	0.00021	3.9	43
2E71M/4B	0.25	1425	0.71	1.68	0.69	74.0	73.5	70.5	4.4	2.0	3.0	0.00067	5.9	46
2E71M/4C	0.37	1425	1.0	2.47	0.70	76.1	75.5	71.5	4.6	2.0	3.0	0.00082	6.7	46
2E80M/4B	0.55	1440	1.45	3.65	0.71	77.1	76.7	75.0	5.2	2.0	3.0	0.00175	9.7	50
2E80M/4C	0.75	1440	1.95	4.97	0.70	79.6	79.2	77.0	5.2	2.0	3.0	0.00200	10.5	50
2E90S/4B	1.1	1440	2.6	7.3	0.75	81.4	81.4	80.5	5.6	2.2	3.1	0.00281	14.4	52
2E90L/4C	1.5	1440	3.4	9.95	0.77	82.8	83.0	82.0	6.0	2.3	3.2	0.00356	17.2	52
2E100L/4B	2.2	1445	4.85	14.6	0.78	84.3	85.3	84.2	6.0	2.4	3.2	0.00634	22.7	54
2E100L/4C	3	1440	6.42	19.89	0.79	85.5	85.7	84.6	6.3	2.4	3.3	0.00775	24.2	54
2E112M/4C	4	1450	8.2	26.35	0.81	86.8	87.4	86.5	6.6	2.5	3.4	0.01220	32	58
2E132S/4B	5.5	1455	11.2	36.1	0.81	87.7	88.6	88.0	6.7	2.6	3.2	0.02520	47.8	62
2E132M/4C	7.5	1460	15.1	49	0.81	88.7	89.0	89.0	7.0	2.7	3.3	0.03060	54.8	62
2E160M/4B	11	1465	21.3	71.7	0.83	89.8	90.3	89.5	6.9	2.4	3.0	0.05800	76.8	65
2E160L/4C	15	1460	28.8	98.12	0.83	90.6	91.3	90.9	6.9	2.6	3.0	0.07000	88.6	65
2E180M/4B	18.5	1465	34.9	120.6	0.84	91.2	91.4	91.4	6.9	2.5	3.0	0.11100	158	65
2E180L/4C	22	1465	41.4	143.40	0.84	91.6	91.7	91.5	7.1	2.6	3.2	0.12900	174	65
2E200L/4C	30	1475	55.5	194.24	0.85	92.3	93.0	93.2	7.6	3.0	3.1	0.23300	241	65
2E225S/4B	37	1475	66	239.5	0.87	93.0	93.8	93.8	7.8	3.0	3.1	0.33900	297	66
2E225M/4C	45	1475	80	291.4	0.87	93.1	94.0	94.3	7.8	3.0	3.0	0.38200	333	66
2E250M/4C	55	1478	95.5	355.4	0.89	93.5	94.3	94.4	7.9	3.2	3.0	0.62400	430	68
2E280S/4B	75	1483	130.8	482.97	0.88	94.0	94.5	94.4	7.9	3.0	3.0	1.25000	618	69
2E280M/4C	90	1484	156	579.2	0.88	94.2	94.6	94.5	7.9	3.2	3.1	1.40000	648	70
2G315S/4	110	1485	195	707	0.86	94.5	94.5	93.8	7.4	2.0	3.0	2.10000	784	74
2G315M/4a	132	1485	230	849	0.87	94.7	94.5	93.8	7.4	2.1	3.0	2.50000	861	74
2G315M/4b	160	1485	280	1029	0.87	94.9	94.9	94.0	7.0	2.0	2.9	2.80000	882	74

* : IE1 Data

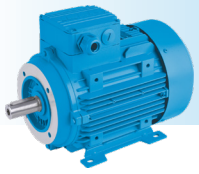

400V 50Hz 1000 rpm

IE2

Type	Full-load Data								Starting Data		Breakdown Torque	Moment of Inertia	B3 Motor Weight	Noise Level
	Power	Speed	Current	Torque	Power Factor	Efficiency % η			Current	Torque				
	kW	rpm	A	Nm	Cosφ	4 / 4	3 / 4	1 / 2	I_A/I_N	M_A/M_N	M_K/M_N	kgm^2	kg	dB(A)
2E71M/6B	0.18	920	0.6	1.87	0.67	64.5	63.0	57.0	3.2	1.9	2.3	0.00076	5.9	42
2E71M/6C	0.25	920	0.78	2.59	0.69	66.5	66.0	61.0	3.3	1.9	2.3	0.00096	6.6	42
2E80M/6A	0.37	925	1.08	3.82	0.69	71.4	71.5	70.0	4.0	2.0	2.6	0.00176	9.1	45
2E80M/6B	0.55	932	1.5	5.64	0.72	73.5	74.0	71.0	4.2	2.1	2.6	0.00202	9.9	45
2E90S/6A	0.75	940	2.0	7.62	0.71	75.9	76.1	73.1	4.1	2.0	2.6	0.00229	13.3	48
2E90L/6B	1.1	940	2.9	11.18	0.70	78.1	78.3	75.0	4.3	2.1	2.6	0.00354	14.8	48
2E100L/6A	1.5	950	3.72	15	0.73	79.8	80.2	79.5	4.5	2.1	2.6	0.00680	20.2	52
2E112M/6A	2.2	960	5.32	21.9	0.73	81.8	82.0	81.5	5.3	2.1	2.7	0.01170	25	56
2E132S/6A	3	970	6.85	29.6	0.76	83.3	84.0	83.0	5.6	2.0	2.8	0.02610	42	60
2E132M/6B	4	970	8.8	39.38	0.77	85.2	85.7	85.3	5.2	2.1	2.6	0.03050	46	60
2E132M/6C	5.5	965	12	54.4	0.77	86.0	87.2	87.0	5.7	2.1	2.7	0.03500	51	60
2E160M/6B	7.5	972	16.3	73.68	0.76	87.2	88.1	87.7	5.6	2.4	2.7	0.05700	77.8	63
2E160L/6D	11	970	22.95	108.3	0.78	88.7	90.0	89.9	6.0	2.5	2.9	0.07870	97.8	63
2E180L/6D	15	972	31	147.4	0.78	89.7	90.5	90.2	6.2	2.5	2.9	0.13500	175	64
2E200L/6B	18.5	977	36.5	180.8	0.81	90.4	90.5	90.7	6.3	2.5	2.6	0.30100	205	64
2E200L/6C	22	978	43	214.8	0.81	91.1	91.3	91.2	6.2	2.5	2.6	0.33400	215	64
2E225M/6B	30	980	57.6	292.2	0.82	91.7	91.8	90.8	6.6	2.6	2.7	0.52000	314	65
2E250M/6B	37	982	69.6	359.80	0.83	92.3	92.6	92.5	6.8	2.7	2.8	0.68000	395	66
2E280S/6A	45	985	84.5	436	0.83	92.7	93.1	92.2	6.8	2.8	2.8	1.15000	490	66
2E280M/6B	55	985	101.5	533.2	0.84	93.1	93.2	93.5	6.9	2.9	2.8	1.45000	545	66
2G315S/6	75	990	139	723	0.83	93.7	93.7	92.4	7.0	2.0	2.5	2.40000	727	72
2G315M/6a	90	990	166	868	0.83	94.0	94.0	92.6	7.0	2.0	2.5	2.90000	805	72
2G315M/6b	110	990	198	1061	0.85	94.3	94.3	92.7	7.0	2.0	2.6	3.50000	860	72
2G315L/6a	132	990	240	1273	0.84	94.6	94.6	93.0	7.0	2.3	3.0	3.60000	1020	72
2G315L/6b	160	990	290	1543	0.84	94.8	94.8	93.2	7.0	2.3	2.7	4.20000	1120	72

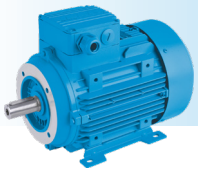

Notes

Notes

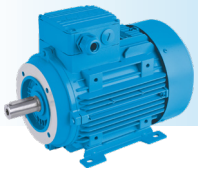

Notes

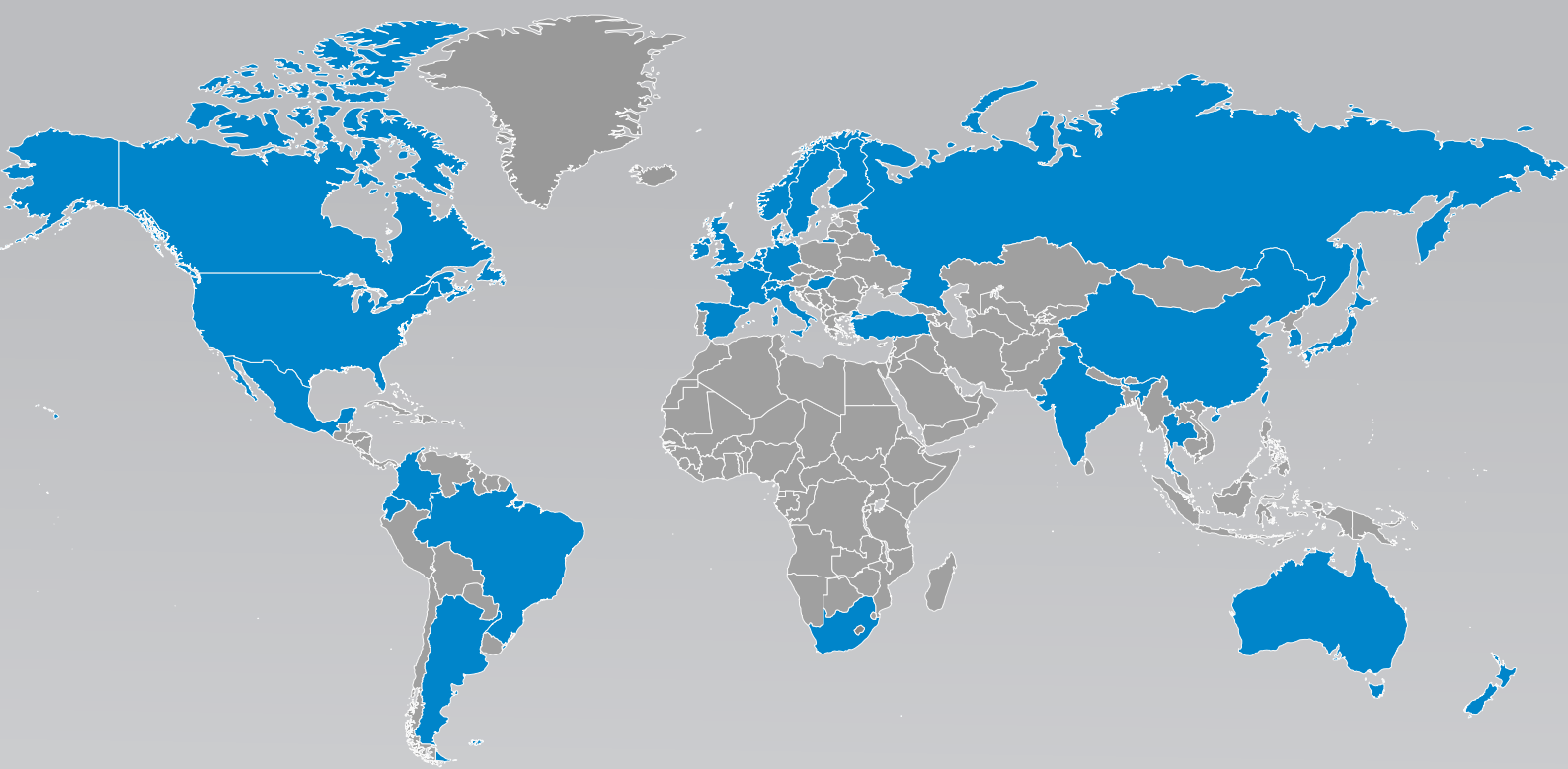

Technologies Customized to **Every Part of the Globe**

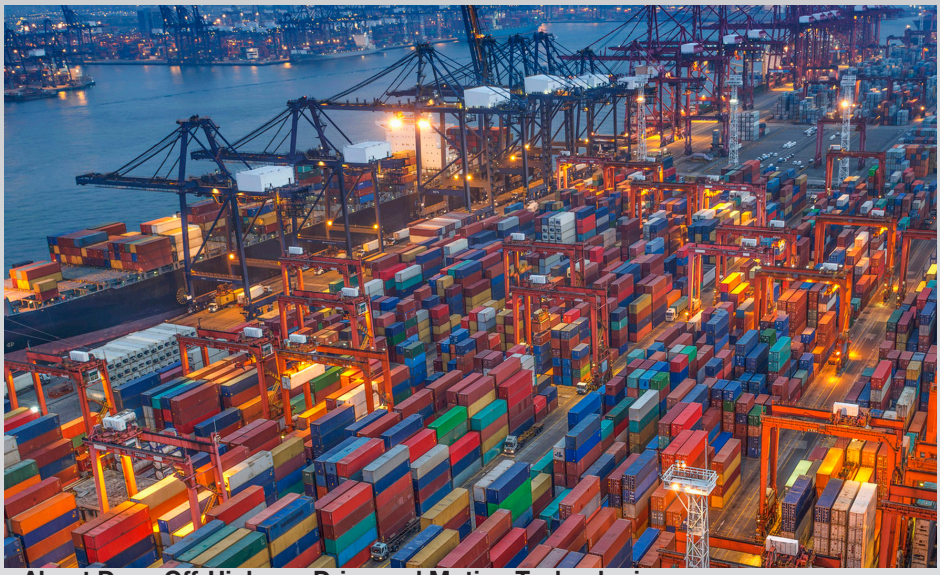

With a presence in 33 countries, Dana Incorporated boasts more than 150 engineering, manufacturing, and distribution facilities. Our worldwide network of local service centers provides assurance that each customer will benefit from the local proximity and responsiveness.

About Dana Incorporated

Dana is an integral partner for virtually every major vehicle and engine manufacturer worldwide. We are a leading supplier of drivetrain, sealing, and thermal technologies to the global automotive, commercial-vehicle, and off-highway markets. Founded in 1904, we employ thousands of people across six continents.

About Dana Off-Highway Drive and Motion Technologies

Dana delivers fully optimized Spicer® drivetrain and Brevini® motion systems to customers in construction, agriculture, material-handling, mining, and industrial markets.
We bring our global expertise to the local level with technologies customized to individual requirements through a network of strategically located technology centers, manufacturing locations, and distribution facilities.

Learn more about Dana's drivetrain and motion systems at **dana.com/offhighway**.

Dana-Industrial.com

Application Policy
Capacity ratings, features, and specifications vary depending upon the model and type of service. Application approvals must be obtained from Dana; contact your representative for application approval. We reserve the right to change or modify our product specifications, configurations, or dimensions at any time without notice.

DANA

BREVINI®
Motion Systems

© 2021 Dana Limited. All rights reserved. DC3A1B1-3A1C1_0 - 12/21