Driveshafts for Industrial Applications

Table of Contents

1 Dana: Driveshaft engineering experts
4 Survey of GWB™ driveshaft series with design features and preferred applications
8 Special designs of GWB driveshafts and additional equipment
10 Notations for reviewing data sheets

Data sheets
12 Series 687/688
16 Series 587
18 Series 390
20 Series 392/393
22 Series 492
24 Series 498
26 Series 587/190/390 Super short designs
28 Series 330 Quick release couplings
29 Series 230 Quick release couplings
30 Journal cross assemblies
31 Flange connection with serration
32 Face key connection series 687/688/587/390
33 Standard companion flanges

34 Design features Series 687/688/587 and series 390/392/393
36 General theoretical instructions
38 Technical instructions for application
48 Selection of GWB driveshafts
51 Additional information and ordering instructions
52 After-sales service

© Spicer Gelenkwellenbau GmbH

Dana: Driveshaft engineering experts For more than 100 years, Dana's expertise and worldwide network of manufacturing partnerships have sustained its ability to supply economically efficient, high-performance products to original equipment manufacturers (OEMs) in changing market environments.

Dana has been the industry leader for driveshafts and driveline technologies for more than 100 years. In a constantly changing market, Dana's global manufacturing network continues to provide application specific, and high-performance product solutions for virtually every major original equipment manufacturer, and aftermarket customers worldwide.

With a focus on technical innovation, quality performance, reliability, and flexibility, Dana engineers continue to provide customers with the same quality and support they've come to expect.

Since 1946, Dana's GWB™ driveshafts have been known for global innovation and quality performance. GWB heavy driveshafts were the first to be developed specifically for diesel locomotives. In the 1950s, GWB driveshafts were the largest available at that time, and were followed several decades later by the first maintenance-free driveshaft. Based on a long-standing commitment to continual innovation and customer satisfaction, GWB driveshafts have been recognized as a market leader trough-out the world.

© Spicer Gelenkwellenbau GmbH

Today, there are basically two types of driveshafts that have evolved into a worldwide technology standard. Their main difference lies in the design of the bearing eye.

Closed bearing eye: This is a design used mainly in the commercial vehicles sector and for general mechanical engineering applications (series 687/688 and 587).

Split bearing eye: Developed for heavy and super-heavy duty applications, this design (series 390/392/393 and 492/498), provides compact dimensions in conjunction with a maximum torque transmission capability and greatly improved service life, apart from facilitating maintenance and assembly operations.

2.400 - 16.300.000 Nm

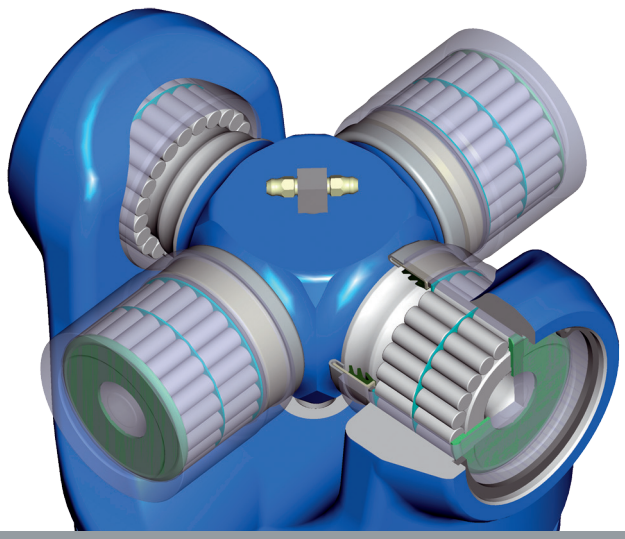

Closed bearing eye

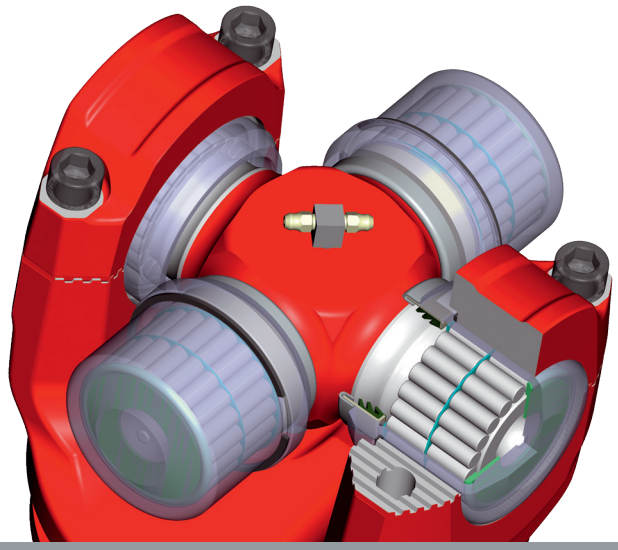

Split bearing eye

© Spicer Gelenkwellenbau GmbH

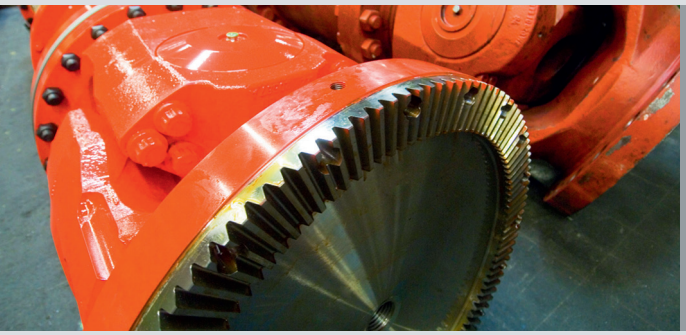

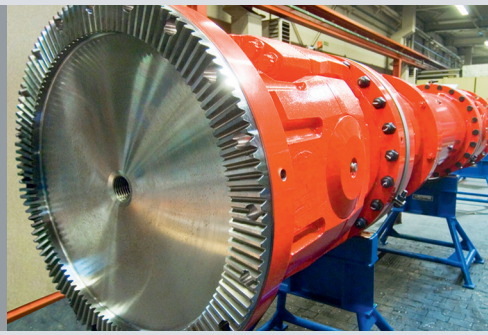

© Spicer Gelenkwellenbau GmbH

Survey of GWB™ driveshaft series

Series

687/688

Torque range T_{CS}
to 35 kNm

Flange diameter
from 100 to 225 mm

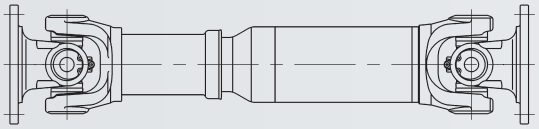

587

Torque range T_{CS}
to 57 kNm

Flange diameter
from 225 to 285 mm

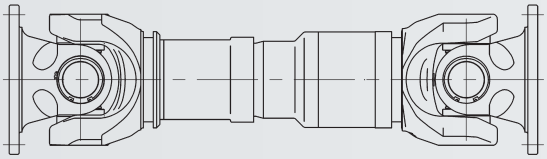

390

Maximum bearing life

Torque range T_{CS}
to 255 kNm

Flange diameter
from 285 to 435 mm

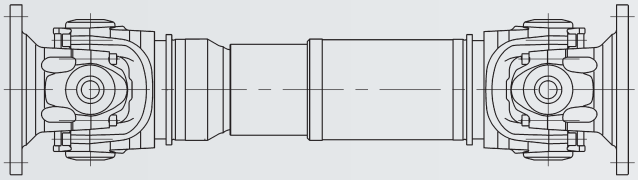

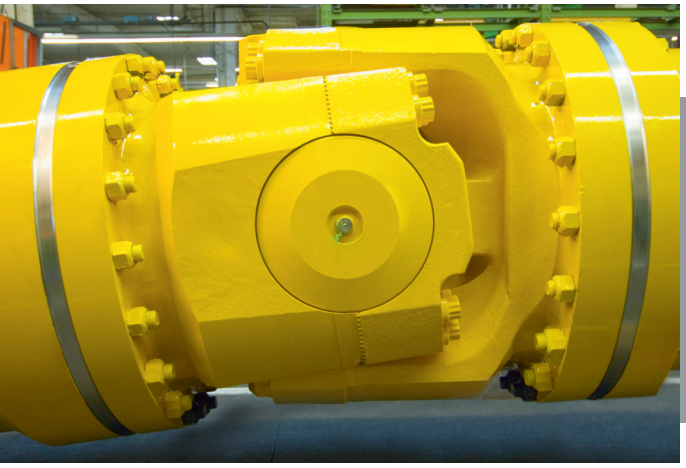

© Spicer Gelenkwellenbau GmbH

Survey of GWB™ driveshaft series

Design features	Preferred applications
• Closed bearing eyes • Compact design • Low maintenance • Plastic-coated splines • Operating angle up to 25°, partly up to 44°	• Railway vehicles • Rolling mill plants • Marine drives • General machinery construction plants Technical data (refer to data sheets)
• Closed bearing eyes • Compact design • Low maintenance • Splines coated with lubricating varnish (587.50 – plastic-coated) • Operating angle up to 24°	• Railway vehicles • Rolling mill plants • Marine drives • General machinery construction plants Technical data (refer to data sheets)
• Maximum bearing life in confined spaces • Split bearing eyes with toothed bearing cap • Compact design • Optimized roller bearing • Length compensation coated with lubricating varnish • Operating angle up to 15°	• Railway vehicles • Marine drives • Crane systems • Paper machines • General machinery construction plants Technical data (refer to data sheets)

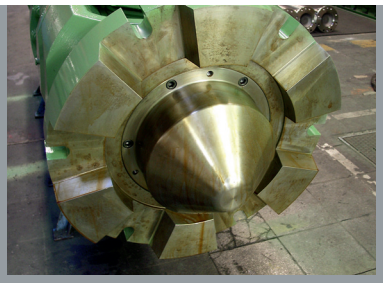

© Spicer Gelenkwellenbau GmbH

Survey of GWB™ driveshaft series

Series

392/393

High torque capacity/ optimized bearing life

Torque range T_{CS}
to 1.150 kNm

Flange diameter
from 225 to 550 mm

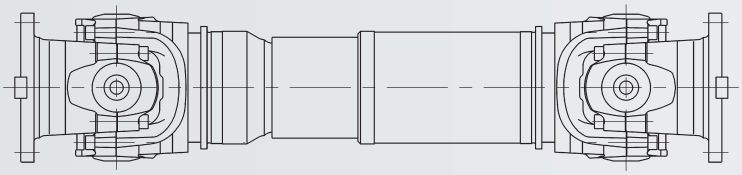

492

Maximum torque capacity

Torque range T_{CS}
to 1.300 kNm

Flange diameter
from 285 to 550 mm

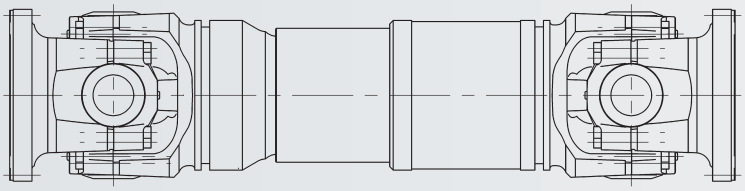

498

Larger sizes available on request

Torque range T_{CS}
to 15.000 kNm

Flange diameter
from 600 to 1.200 mm

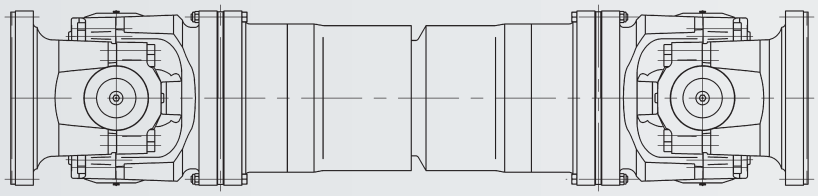

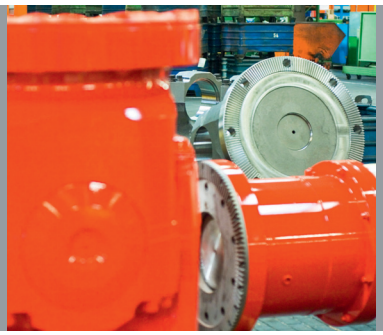

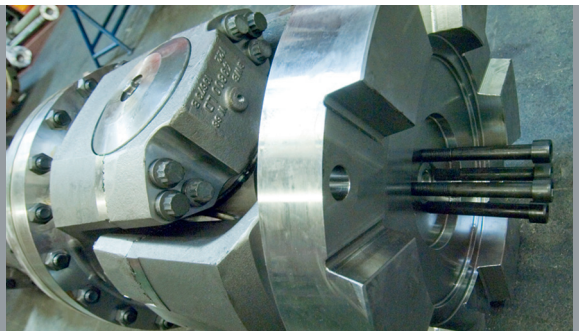

© Spicer Gelenkwellenbau GmbH

Survey of GWB™ driveshaft series

Design features

- High torque capacity despite small connecting dimensions
- Split bearing eyes with toothed bearing cap
- Compact design
- Journal cross with low notch factor
- Length compensation coated with lubricating varnish
- Operating angle 10° up to 15°
- Series 393 with optimized bearing life

Preferred applications

- Rolling mill plants
- Calender drives
- Heavy-loaded plants of general machinery construction

Technical data (refer to data sheets)

- Increased torque capacity in comparison to 393
- Split bearing eyes with toothed bearing cap
- Standard Hirth-serrated flange
- Journal cross with low notch factor
- Length compensation coated with lubricant varnish
- Operating angle 7° up to 15°

- Rolling mill plants
- Calender drives
- Extremely high loaded plants of general machinery construction

Technical data (refer to data sheets)

- Three operating angle versions for maximum torque or maximum bearing life capacity
- Split bearing eyes with toothed bearing cap
- Standard Hirth-serrated flange
- Operating angle up to 15°

- Main rolling mill drive units
- Heavy machinery construction plants

Technical data (refer to data sheets)

© Spicer Gelenkwellenbau GmbH

Special designs of GWB™ driveshafts and additional equipment

Series

587/190/390 **Super short designs**

Torque range T_{CS}
to 130 kNm

Flange diameter
from 275 to 405 mm

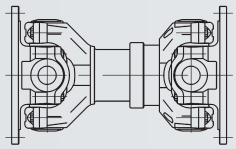

392/393 **Tunnel joint shafts**

Torque range T_{CS}
to 1.053 kNm

Flange diameter
from 225/315 to
550/710 mm

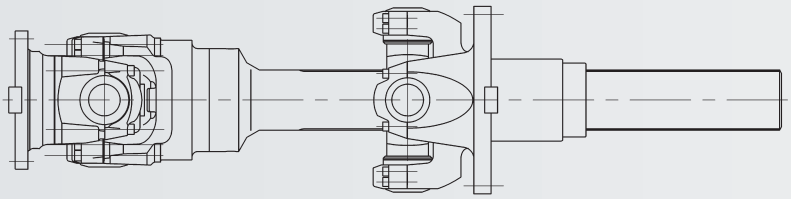

Intermediate shafts

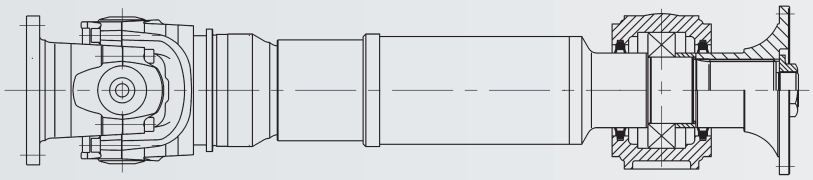

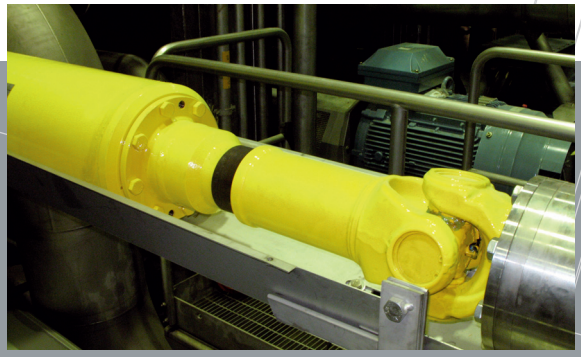

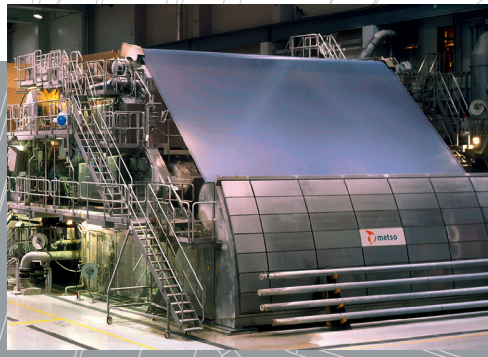

© Spicer Gelenkwellenbau GmbH

Special designs of GWB™ driveshafts and additional equipment

Design features	Preferred applications
• Closed bearing eyes (series 587) • Split bearing eyes (series 190/390) • Joints and length compensation are regreasable • Operating angle up to 5°	• Railway vehicles • Rolling mill plants • Marine drives • Calender drives • Paper machines • General machinery construction plants Technical data (refer to data sheets)
• Shorter designs with large length compensation • Length compensation through the joint • High torque capacity with small connection dimensions • Split bearing eyes with toothed bearing cap • Bearings with labyrinth seals • Operating angle up to 10°/ 7,5°	• Rolling mill plants
• With or without length compensation • Integrated bearing location	• Pump drives

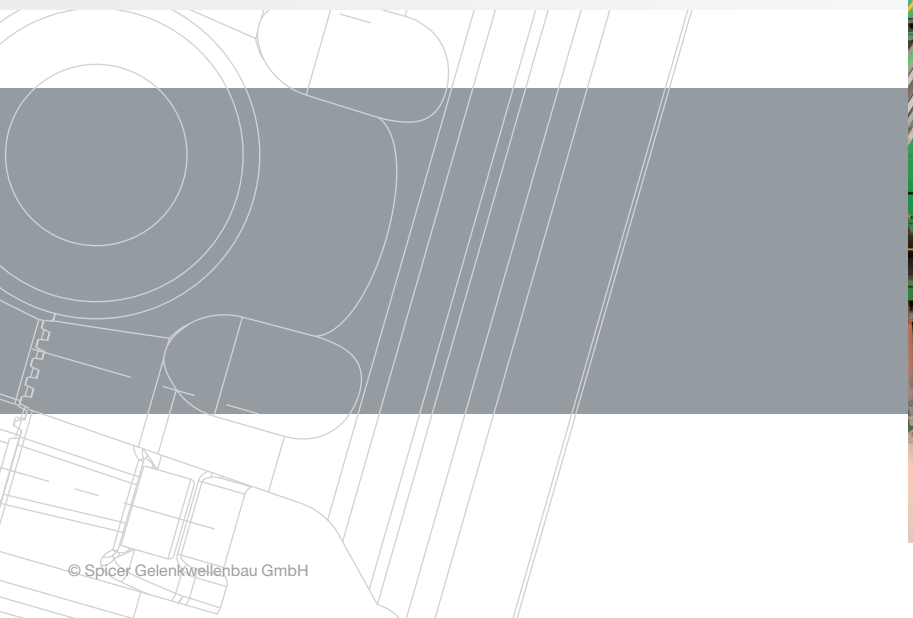

© Spicer Gelenkwellenbau GmbH

Notations for reviewing data sheets

Standard designs

0.01

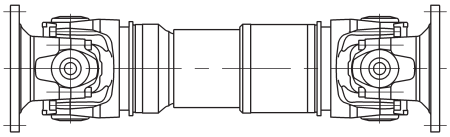

Driveshaft with length compensation, tubular design

0.03

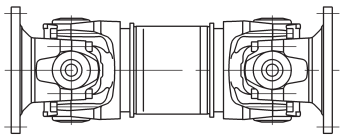

Driveshaft without length compensation, tubular design

9.01
9.02
9.03

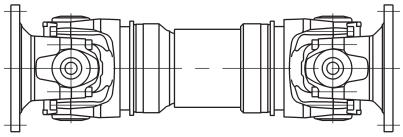

Driveshaft with length compensation, short design

9.04

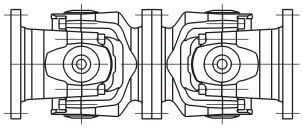

Driveshaft without length compensation, double flange shaft design

Special designs

0.02

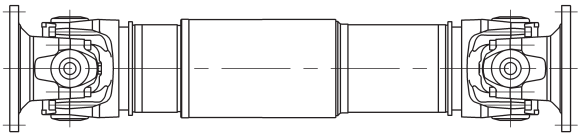

Driveshaft with large length compensation, tubular design

9.06

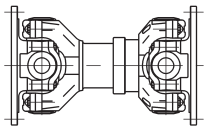

Driveshaft with length compensation, super short design

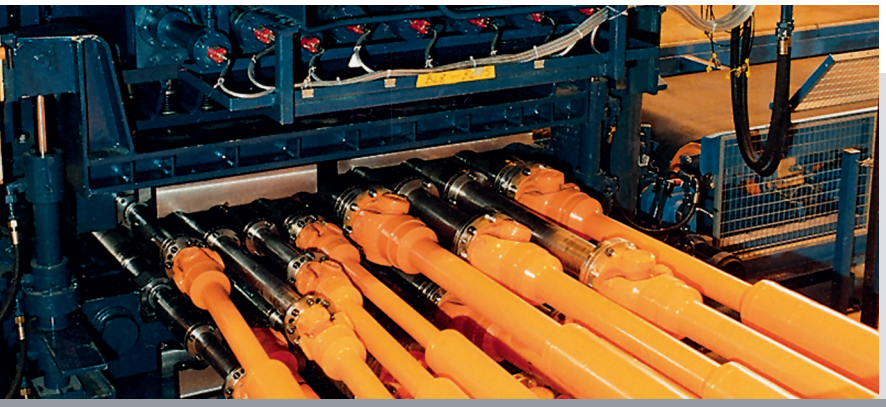

© Spicer Gelenkwellenbau GmbH

Intermediate shafts*

(available with intermediate bearing on request)

0.04

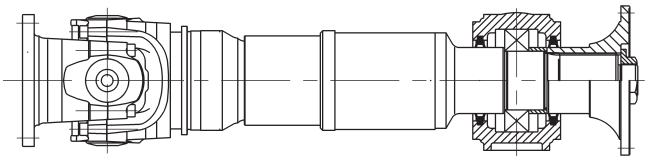

Intermediate shaft with length compensation

0.04

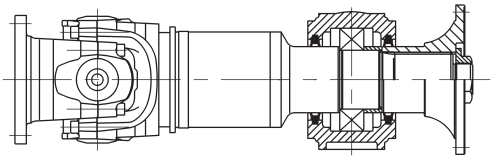

Intermediate shaft without length compensation

0.01

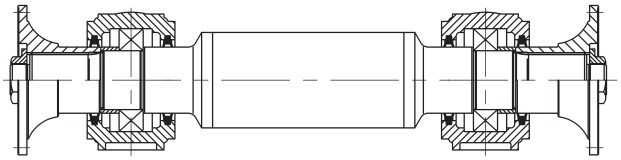

Midship shaft

* Data sheet and/or drawing available on request.

© Spicer Gelenkwellenbau GmbH

Data sheet series 687/688

0.02 with length compensation, tubular design
0.03 without length compensation, tubular design
9.01 with length compensation, short design
9.03 with length compensation, short design
9.04 without length compensation, double flange shaft design

Design

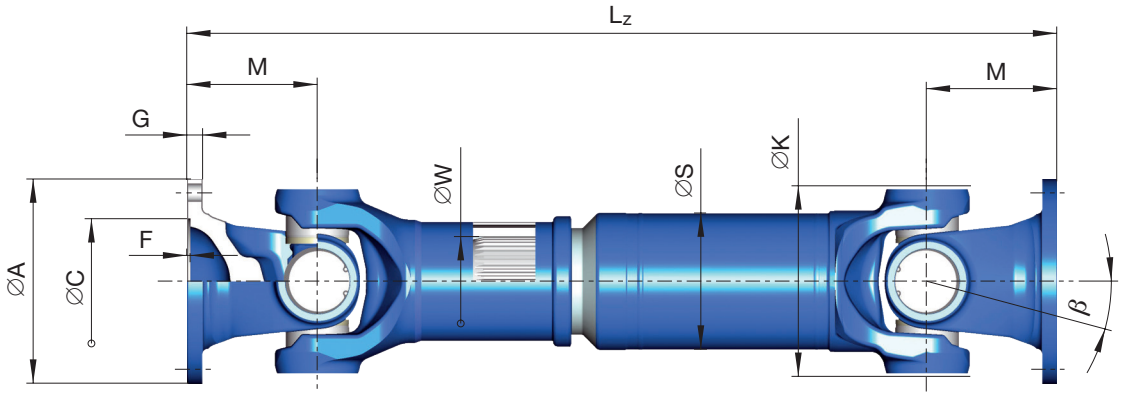

0.02

Shaft size		687/688.15	687/688.20	687/688.25	687/688.30		687/688.35		687/688.40			
T_{CS}	kNm	2,4	3,5	5	6,5		10		14			
T_{DW}	kNm	0,7	1,0	1,6	1,9		2,9		4,4			
L_c	–	$1,79 \times 10^{-4}$	$5,39 \times 10^{-4}$	$1,79 \times 10^{-3}$	$2,59 \times 10^{-3}$		0,0128		0,0422			
β	∢°	25	25	25	25		25		25	44	25	44
A	mm	100	120	120	120	150	150	180	150	150	180	180
K	mm	90	98	113	127	127	144	144	160	160	160	160
B ± *0,1 mm*	mm	84	101,5	101,5	101,5	130	130	155,5	130	130	155,5	155,5
C H7	mm	57	75	75	75	90	90	110	90	90	110	110
F[1])	mm	2,5	2,5	2,5	2,5	3	3	3	3	3	3	3
G	mm	7	8	8	8	10	10	12	10	10	12	12
H + *0,2 mm*	mm	8,25	10,25	10,25	10,25	12,25	12,1	14,1	12,1	12,1	14,1	14,1
I[2])	–	6	8	8	8	8	8	8	8	8	8	8
M	mm	48	54	70	72	78	95	90	102	102	102	102
S	mm	63,5 x 2,4	76,2 x 2,4	89 x 2,4	90 x 3	90 x 3	100 x 3	100 x 3	120 x 3	100 x 4,5	120 x 3	100 x 4,5
W *DIN 5480*	mm	36 x 1,5	40 x 1,5	45 x 1,5	48 x 1,5	48 x 1,5	54 x 1,5	54 x 1,5	62 x 1,75			

T_{CS} = **Functional limit torque***
If the permissible functional limit torque T_{CS} is to be fully utilized, the flange connection must be reinforced.

T_{DW} = **Reversing fatigue torque***
L_c = **Bearing capacity factor***
* See specifications of driveshafts.
β = Maximum deflection angle per joint

Tubular shafts with welded-on balancing plates have lower fatigue torques T_{DW}
1) Effective spigot depth
2) Number of flange holes

© Spicer Gelenkwellenbau GmbH

Data sheet series 687/688

Design

0.03

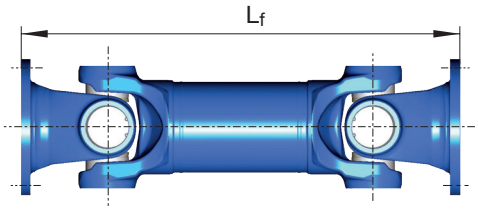

9.01
9.03

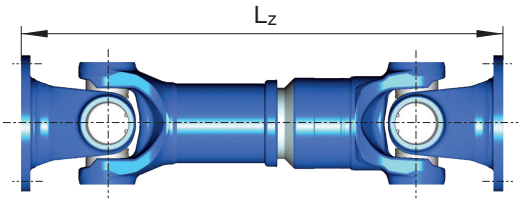

9.04

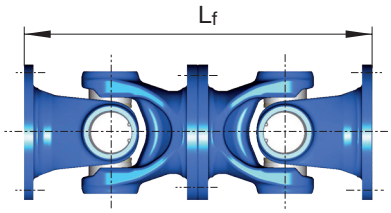

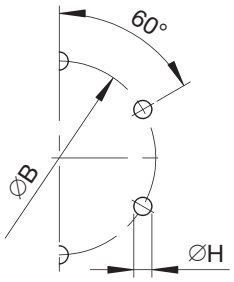

6-hole flange

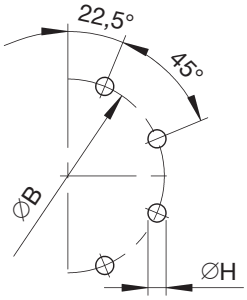

8-hole flange

NOTE: Hole patterns are not optional.
Each driveshaft size has a specific hole pattern.

Design	Shaft size		687/688.15	687/688.20	687/688.25	687/688.30		687/688.35		687/688.40			
0.02	$L_{z\,min}$	mm	346	379	458	492	504	582	572	586	693	586	693
	L_a	mm	60	70	100	110	110	110	110	110	180	110	180
	G	kg	5,7	8,4	12,0	13	14,2	24,0	25,6	28,7	30,3	29,4	30,9
	G_R	kg	3,62	4,37	5,13	6,44	6,44	7,18	7,18	8,66	10,6	8,66	10,6
	Jm	kgm^2	0,0043	0,0089	0,0144	0,0245	0,0245	0,043	-	0,0676	0,0706	0,0776	0,0806
	Jm_R	kgm^2	0,0034	0,0059	0,0096	0,0122	0,0122	0,0169	0,0169	0,0296	0,0242	0,0296	0,0242
	C	Nm/rad.	$0,26 \times 10^5$	$0,42 \times 10^5$	$0,71 \times 10^5$	$0,78 \times 10^5$	$0,78 \times 10^5$	$1,18 \times 10^5$	-	$2,17 \times 10^5$	$1,61 \times 10^5$	$2,17 \times 10^5$	$1,61 \times 10^5$
	C_R	Nm/rad.	$0,34 \times 10^5$	$0,60 \times 10^5$	$0,98 \times 10^5$	$1,25 \times 10^5$	$1,25 \times 10^5$	$1,72 \times 10^5$	$1,72 \times 10^5$	$3,02 \times 10^5$	$2,47 \times 10^5$	$3,02 \times 10^5$	$2,47 \times 10^5$
0.03	$L_{f\,min}$	mm	221	239	282	310	322	379	369	423	449	423	449
	G	kg	4,1	5,8	8,6	8,6	9,8	18,0	19,6	22,8	21,0	23,4	21,6
	Jm	kgm^2	0,0038	0,0085	0,0129	0,0238	0,0238	0,04	-	0,066	0,0628	0,076	0,0728
	C	Nm/rad.	$0,44 \times 10^5$	$0,86 \times 10^5$	$1,44 \times 10^5$	$1,74 \times 10^5$	$1,74 \times 10^5$	$1,81 \times 10^5$	-	$3,35 \times 10^5$	$2,78 \times 10^5$	$3,35 \times 10^5$	$2,78 \times 10^5$
9.01	$L_{z\,min}$	mm	296	322	361	379	391	510	500	505	525	505	525
	$L_{a\,min}$	mm	38	41	36	36	36	70	70	70	60	70	60
	$L_{z\,max}$	mm	348	381	425	453	465	550	540	545	645	545	645
	$L_{a\,max}$	mm	90	100	100	110	110	110	110	110	180	110	180
9.03	$L_{z\,min}$	mm	245	274	313	331	343	419	409	441	–	441	–
	$L_{a\,min}$	mm	25	27	28	29	29	45	45	45	–	45	–
	$L_{z\,max}$	mm	280	317	355	397	409	484	474	506	–	506	–
	$L_{a\,max}$	mm	60	70	70	95	95	110	110	110	–	110	–
9.04	$L_{f\,min}$	mm	192	216	280	288	312	380	360	408	408	408	408

$L_{z\,min}$ = Shortest possible compressed length
L_a = Length compensation
$L_{f\,min}$ = Shortest fixed length
$L_z + L_a$ = Maximum operating length

G = Weight of shaft
G_R = Weight per 1.000 mm tube
Jm = Moment of inertia
Jm_R = Moment of inertia per 1.000 mm tube

C = Torsional stiffness of shaft without tube
C_R = Torsional stiffness per 1.000 mm tube

© Spicer Gelenkwellenbau GmbH

Data sheet series 687/688

0.02 with length compensation, tubular design
0.03 without length compensation, tubular design
9.01 with length compensation, short design
9.03 with length compensation, short design
9.04 without length compensation, double flange shaft design

Design

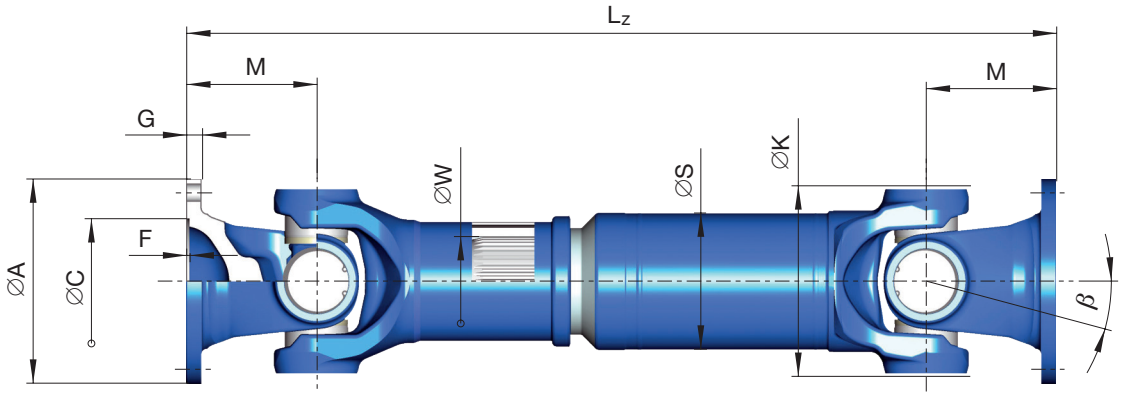

0.02

Shaft size		687/688.45			687/688.55			687/688.65	
T_{CS}	kNm	17			25			35	
T_{DW}	kNm	5,1			7,3			11	
L_c	–	0,13			0,29			0,82	
β	∢°	25	35	25	25	35	25	25	25
A	mm	**180**	**180**	**225**	**180**	**180**	**225**	**180**	**225**
K	mm	**174**	**174**	**174**	**178**	**178**	**178**	**204**	**204**
B *± 0,1 mm*	mm	155,5	155,5	196	155,5	155,5	196	155,5	196
C *H7*	mm	110	110	140	110	110	140	110	140
F[1])	mm	3	3	5	3	3	5	3	5
G	mm	12	12	15	14	14	15	15	15
H *+ 0,2 mm*	mm	14,1	14,1	16,1	16,1	16,1	16,1	16,1	16,1
I[2])	–	8	8	8	10	10	8	10	8
M	mm	95	95	90	115	115	95	110	110
S	mm	120 x 4	110 x 5	120 x 4	120 x 6	120 x 6	120 x 6	142 x 6	142 x 6
W *DIN 5480*	mm	68 x 1,75			78 x 2			88 x 2,5	

T_{CS} = **Functional limit torque***
If the permissible functional limit torque T_{CS} is to be fully utilized, the flange connection must be reinforced.

T_{DW} = **Reversing fatigue torque***
L_c = **Bearing capacity factor***
* See specifications of driveshafts.
β = Maximum deflection angle per joint

Tubular shafts with welded-on balancing plates have lower fatigue torques T_{DW}
1) Effective spigot depth
2) Number of flange holes

© Spicer Gelenkwellenbau GmbH

Data sheet series 687/688

Design

0.03

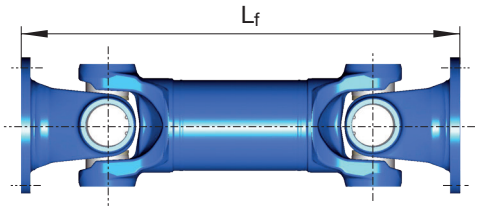

9.01
9.03

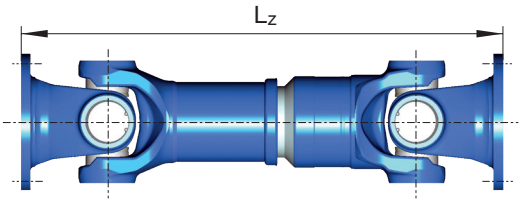

9.04

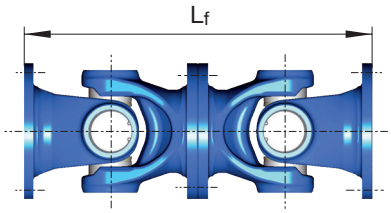

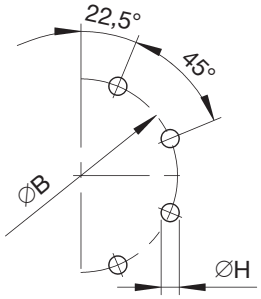

8-hole flange

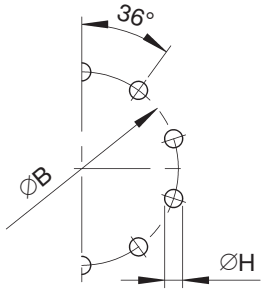

10-hole flange

NOTE: Hole patterns not optional.
Each driveshaft size has a specific hole pattern.

Design	Shaft size		687/688.45			687/688.55			687/688.65	
0.02	$L_{z\,min}$	mm	595	703	585	662	681	622	686	686
	L_a	mm	110	180	110	110	110	110	110	110
	G	kg	35,7	38,4	37,7	46,8	46,6	47,0	60,6	64,6
	G_R	kg	11,44	12,95	11,44	16,87	16,87	16,87	20,12	20,12
	Jm	kgm^2	0,1002	0,1242	0,1342	0,120	0,121	0,151	0,2224	0,2614
	Jm_R	kgm^2	0,0385	0,0358	0,0385	0,055	0,055	0,055	0,0932	0,0932
	C	Nm/rad.	$3{,}10 \times 10^5$	$2{,}18 \times 10^5$	$3{,}10 \times 10^5$	$4{,}05 \times 10^5$	$3{,}86 \times 10^5$	$4{,}05 \times 10^5$	$5{,}63 \times 10^5$	$5{,}63 \times 10^5$
	C_R	Nm/rad.	$3{,}93 \times 10^5$	$3{,}65 \times 10^5$	$3{,}93 \times 10^5$	$5{,}60 \times 10^5$	$5{,}60 \times 10^5$	$5{,}60 \times 10^5$	$9{,}50 \times 10^5$	$9{,}50 \times 10^5$
0.03	$L_{f\,min}$	mm	425	425	415	475	495	435	491	491
	G	kg	28,0	27,8	30	33,1	34,8	36,1	47,3	51,3
	Jm	kgm^2	0,0954	0,0976	0,1294	0,1176	0,1235	0,1376	0,2032	0,2422
	C	Nm/rad.	$4{,}82 \times 10^5$	$3{,}71 \times 10^5$	$4{,}82 \times 10^5$	$5{,}39 \times 10^5$	$5{,}13 \times 10^5$	$5{,}39 \times 10^5$	$7{,}17 \times 10^5$	$7{,}17 \times 10^5$
9.01	$L_{z\,min}$	mm	517	538	507	587	606	547	601	601
	$L_{a\,min}$	mm	70	60	70	70	70	70	70	70
	$L_{z\,max}$	mm	557	658	547	617	636	577	641	641
	$L_{a\,max}$	mm	110	180	110	100	100	100	110	110
9.03	$L_{z\,min}$	mm	447	–	437	513	–	473	524	524
	$L_{a\,min}$	mm	50	–	50	50	–	50	50	50
	$L_{z\,max}$	mm	507	–	497	563	–	523	584	584
	$L_{a\,max}$	mm	110	–	110	110	–	110	110	110
9.04	$L_{f\,min}$	mm	380	380	360	460	460	380	440	440

$L_{z\,min}$ = Shortest possible compressed length
L_a = Length compensation
$L_{f\,min}$ = Shortest fixed length
$L_z + L_a$ = Maximum operating length

G = Weight of shaft
G_R = Weight per 1.000 mm tube
Jm = Moment of inertia
Jm_R = Moment of inertia per 1.000 mm tube

C = Torsional stiffness of shaft without tube
C_R = Torsional stiffness per 1.000 mm tube

© Spicer Gelenkwellenbau GmbH

Data sheet series 587

0.01 with length compensation, tubular design
0.02 with large length compensation, tubular design
0.03 without length compensation, tubular design

9.01 with length compensation, short design
9.02 with length compensation, short design
9.03 with length compensation, short design
9.04 without length compensation, double flange shaft design

Design

0.01
587.55
587.60

0.02
587.50

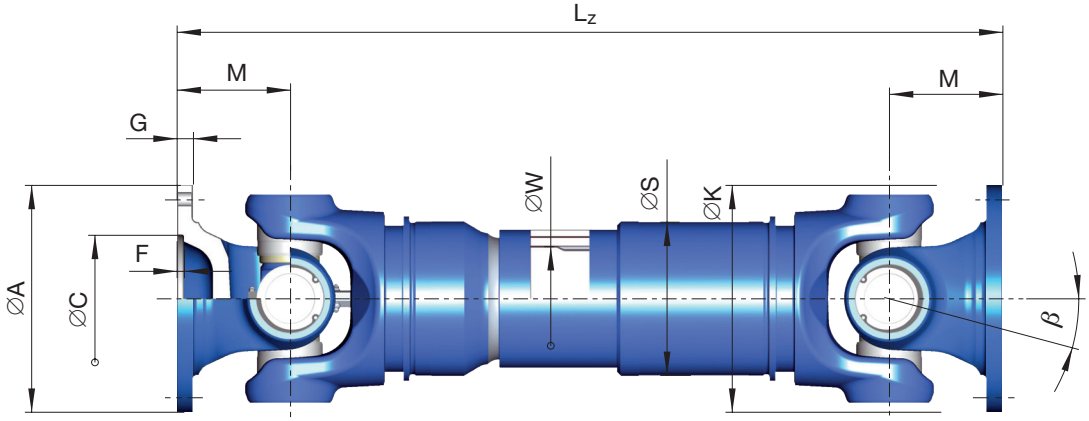

Shaft size		587.50		587.55		587.60	
T_{CS}	**kNm**	**43**		**52**		**57**	
T_{DW}	**kNm**	**13**		**23 (18*)**		**23**	
L_C	**–**	**1,8**		**7,8**		**25,3**	
β	∡°γ	24	24	20	20	20	20
A	mm	**225**	**250**	**250**	**285**	**285**	**285**
K	mm	**215**	**215**	**250**	**250**	**265**	**265**
B *± 0,1 mm*	mm	196	218	218	245	245	245
Bs *± 0,1 mm*	mm	–	214	214	–	240	–
C *H7*	mm	140	140	140	175	175	175
F[1])	mm	4,4	5,4	5,5	6	6	6
G	mm	15	18	18	20	20	20
H *+ 0,2 mm*	mm	16,1	18,1	18,1	20,1	20,1	20,1
Hs *H12*	mm	-	25	25	-	28	-
I[2])	-	8	8	8	8	8	8
Is[3]	-	-	4	4	-	4	-
M	mm	108	108	125	125	135	135
S	mm	144 x 7	144 x 7	167,7 x 9,8	167,7 x 9,8	167,7 x 9,8	167,7 x 9,8
W *DIN 5480*	mm	90 x 2,5	90 x 2,5	120 x 2,5	120 x 2,5	120 x 2,5	120 x 2,5

* reduced torques for design 9.02 and 9.03

T_{CS} = Functional limit torque*
If the permissible functional limit torque T_{CS} is to be fully utilized, the flange connection (e.g., with dowel pins) must be reinforced. Yield torque 30% over T_{CS}

T_{DW} = Reversing fatigue torque*
L_c = Bearing capacity factor*
* See specifications of driveshafts.
β = Maximum deflection angle per joint

1) Effective spigot depth
2) Number of flange holes (standard flange connection)
3) Number of flange holes (dowel pin connection)

© Spicer Gelenkwellenbau GmbH

Data sheet series 587

Design

0.03

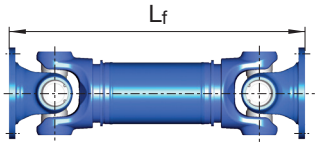

9.01
9.02
9.03

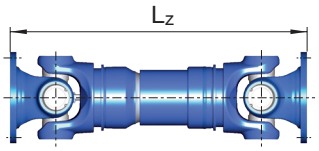

9.04

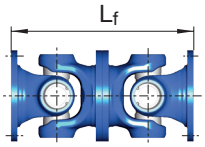

Standard flange connection

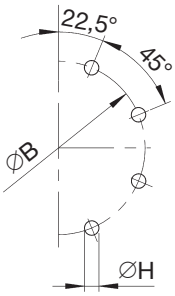

8-hole flange

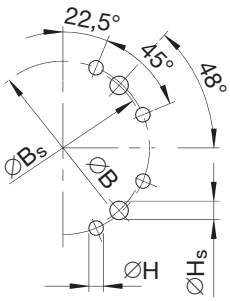

8-hole flange

Dowel pin connection according to DIN 15451

Design	Shaft size		587.50								587.55				587.60	
0.01	$L_{z\,min}$	mm	–				–				840	934	840	934	870	964
	L_a	mm	–				–				110	140	110	140	110	140
	G	kg	–				–				131	137	136	142	145	151
	G_R	kg	–				–				38,2	38,2	38,2	38,2	38,2	38,2
	Jm	kgm^2	–				–				0,675	0,691	0,755	0,771	0,968	0,984
	Jm_R	kgm^2	–				–				0,239	0,239	0,239	0,239	0,239	0,239
	C	Nm/rad.	–				–				$9{,}41 \times 10^5$	$9{,}37 \times 10^5$	$9{,}41 \times 10^5$	$9{,}37 \times 10^5$	$1{,}05 \times 10^6$	$1{,}04 \times 10^6$
	C_R	Nm/rad.	–				–				$2{,}43 \times 10^6$	$2{,}43 \times 10^6$	$2{,}43 \times 10^6$	$2{,}43 \times 10^6$	$2{,}43 \times 10^6$	$2{,}43 \times 10^6$
0.02*	$L_{z\,min}$	mm	800				800				1.185		1.185		1.215	
	$L_{a\,min}$	mm	110				110				300		300		300	
	G	kg	86				91				165		170		189	
	G_R	kg	23,7				23,7				38,2		38,2		38,2	
0.03	L_f	mm	540				540				610		610		640	
	G	kg	72				77				88		93		103	
	G_R	kg	23,7				23,7				38,2		38,2		38,2	
	Jm	kgm^2	0,27				0,306				0,547		0,627		0,84	
	Jm_R	kgm^2	0,111				0,111				0,239		0,239		0,239	
	C	Nm/rad.	$7{,}2 \times 10^5$				$7{,}2 \times 10^5$				$9{,}8 \times 10^5$		$9{,}8 \times 10^5$		$11{,}5 \times 10^5$	
	C_R	Nm/rad.	$11{,}33 \times 10^5$				$11{,}33 \times 10^5$				$2{,}43 \times 10^6$		$2{,}43 \times 10^6$		$2{,}43 \times 10^6$	
9.01	$L_{z\,min}$	mm	–				–				813		813		843	
	L_a	mm	–				–				100		100		100	
	G	kg	–				–				110		115		142	
	Jm	kgm^2	–				–				0,64		0,72		0,93	
	C	Nm/rad.	–				–				$8{,}8 \times 10^5$		$8{,}8 \times 10^5$		$9{,}7 \times 10^5$	
9.02	L_z	mm	–				–				780		780		810	
	L_a	mm	–				–				65		65		70	
	G	kg	–				–				108		113		125	
9.03	L_z	mm	550	600	650	696	550	600	650	696	720		720		750	
	L_a	mm	60	75	90	110	60	75	90	110	65		65		65	
	G	kg	61	66	68	70	66	71	73	75	113		118		126	
9.04	L_f	mm	432				432				500		500		540	
	G	kg	58				68				81		91		110	

$L_{z\,min}$ = Shortest possible compressed length
L_a = Length compensation
$L_{f\,min}$ = Shortest fixed length
$L_z + L_a$ = Maximum operating length

G = Weight of shaft
G_R = Weight per 1.000 mm tube
Jm = Moment of inertia
Jm_R = Moment of inertia per 1.000 mm tube

C = Torsional stiffness of shaft without tube
C_R = Torsional stiffness per 1.000 mm tube
* Larger length compensation available on request

© Spicer Gelenkwellenbau GmbH

Data sheet series 390 Maximum bearing life

0.01 with length compensation, tubular design
0.02 with large length compensation, tubular design
0.03 without length compensation, tubular design

9.01 with length compensation, short design
9.02 with length compensation, short design
9.03 with length compensation, short design
9.04 without length compensation, double flange shaft design

Design

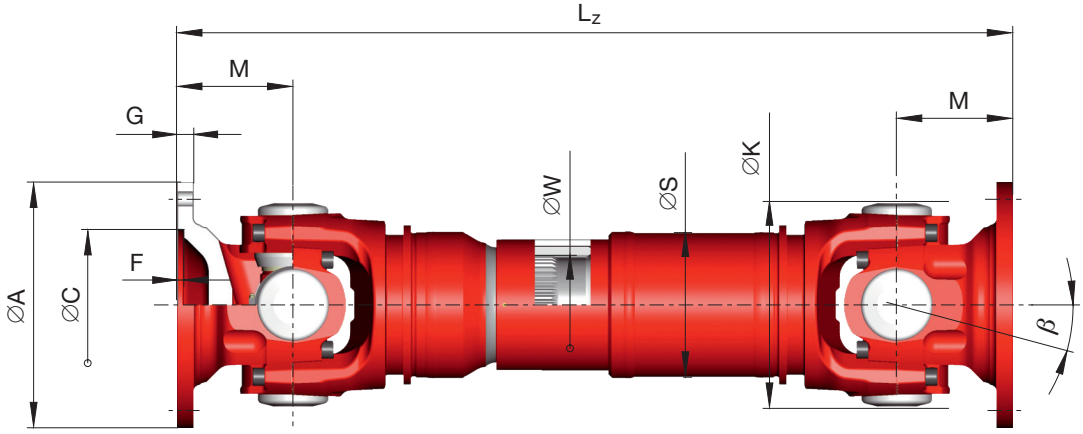

0.01

Shaft size		390.60	390.65	390.70	390.75	390.80
T_{CS}	**kNm**	**60**	**90**	**130**	**190**	**255**
T_{DW}	**kNm**	**23**	**36**	**53**	**75**	**102**
L_c	**–**	**25**	**72**	**243**	**627**	**1.583**
β	∡°γ	15	15	15	15	15
A	mm	**285**	**315**	**350**	**390**	**435**
K	mm	**240**	**265**	**300**	**330**	**370**
B ± 0,1 mm	mm	245	280	310	345	385
Bs ± 0,1 mm	mm	240	270	300	340	378
C H7	mm	175	175	220	250	280
F[1])	mm	6	6	7	7	9
G	mm	20	22	25	28	32
H[4])	mm	20,1	22,1	22,1	24,1	27,1
Hs H12	mm	28	30	32	32	35
I[2])	–	8	8	10	10	10
Is[3])	–	4	4	4	4	4
M	mm	135	150	170	190	210
S	mm	167,7 x 9,8	218,2 x 8,7	219 x 13,3	273 x 11,6	273 x 19
W DIN 5480	mm	120 x 2,5	150 x 3	150 x 3	185 x 5	185 x 5

T_{CS} = Functional limit torque*
If the permissible functional limit torque T_{CS} is to be fully utilized, the flange connection (e.g., with dowel pins) must be reinforced. Yield torque 30% over T_{CS}

T_{DW} = Reversing fatigue torque*
L_c = Bearing capacity factor*
* See specifications of driveshafts.
β = Maximum deflection angle per joint

1) Effective spigot depth
2) Number of flange holes (standard flange connection)
3) Number of flange holes (dowel pin connection)
4) 390.60 - 390.70 + 0,2 mm
390.75 - 390.80 + 0,5 mm

© Spicer Gelenkwellenbau GmbH

Data sheet series 390 Maximum bearing life

Design

0.02

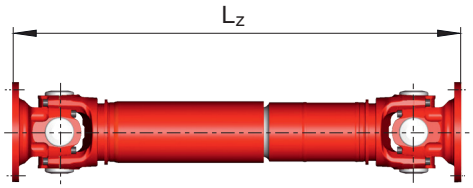

9.01
9.02
9.03

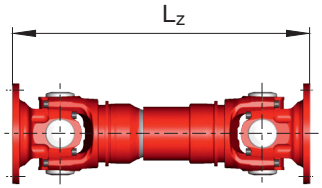

0.03

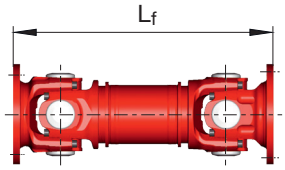

9.04

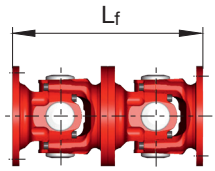

Standard flange connection

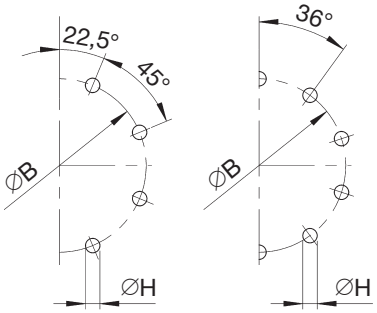

8-hole flange 10-hole flange

Dowel pin connection according to DIN 15451

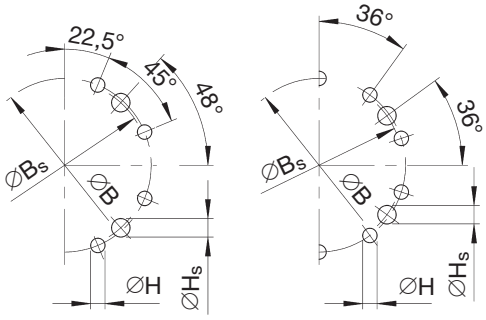

8-hole flange 10-hole flange

NOTE: Each driveshaft size has a specific hole pattern (see table). Other hole patterns available on request.

Design	Shaft size		390.60		390.65	390.70	390.75	390.80
0.01	$L_{z\,min}$	mm	870	964	980	1.070	1.210	1.280
	L_a	mm	110	140	135	135	170	170
	G	kg	151	157	216	276	405	490
	G_R	kg	38,2	38,2	44,9	67,5	74,8	119,0
	Jm	kgm^2	1,04	1,05	1,61	2,51	4,2	8,2
	Jm_R	kgm^2	0,239	0,239	0,494	0,717	1,28	1,93
	C	Nm/rad.	$1{,}08 \times 10^6$	$1{,}08 \times 10^6$	$1{,}65 \times 10^6$	$2{,}43 \times 10^6$	$3{,}3 \times 10^6$	$4{,}7 \times 10^6$
	C_R	Nm/rad.	$2{,}43 \times 10^6$	$2{,}43 \times 10^6$	$5{,}04 \times 10^6$	$7{,}3 \times 10^6$	$1{,}3 \times 10^7$	$1{,}97 \times 10^7$
0.02*	$L_{z\,min}$	mm	1.210		1.360	1.450	1.450	1.640
	$L_{a\,min}$	mm	300		300	300	300	300
	G	kg	189		300	361	530	690
	G_R	kg	38,2		44,9	67,5	74,8	119,0
0.03	$L_{f\,min}$	mm	640		710	800	890	960
	G	kg	109		159	218	302	385
	G_R	kg	38,2		44,9	67,5	74,8	119,0
9.01	L_z	mm	843		953	1.043	1.175	1.245
	L_a	mm	100		135	135	170	170
	G	kg	136		213	273	402	482
9.02	L_z	mm	810		890	980	1.100	1.170
	L_a	mm	70		75	75	95	95
	G	kg	135		198	261	375	456
9.03	L_z	mm	750		835	925	1.030	1.100
	L_a	mm	65		75	75	85	85
	G	kg	135		202	264	371	453
9.04	L_f	mm	540		600	680	760	840
	G	kg	108		146	210	284	380

$L_{z\,min}$ = Shortest possible compressed length
L_a = Length compensation
$L_{f\,min}$ = Shortest fixed length
$L_z + L_a$ = Maximum operating length

G = Weight of shaft
G_R = Weight per 1.000 mm tube
Jm = Moment of inertia
Jm_R = Moment of inertia per 1.000 mm tube

C = Torsional stiffness of shaft without tube
C_R = Torsional stiffness per 1.000 mm tube
* Larger length compensation available on request

© Spicer Gelenkwellenbau GmbH

Data sheet series 392/393 High torque capacity

0.01 with length compensation, tubular design
0.02 with large length compensation, tubular design
0.03 without length compensation, tubular design

9.01 with length compensation, short design
9.02 with length compensation, short design
9.03 with length compensation, short design
9.04 without length compensation, double flange shaft design

Design

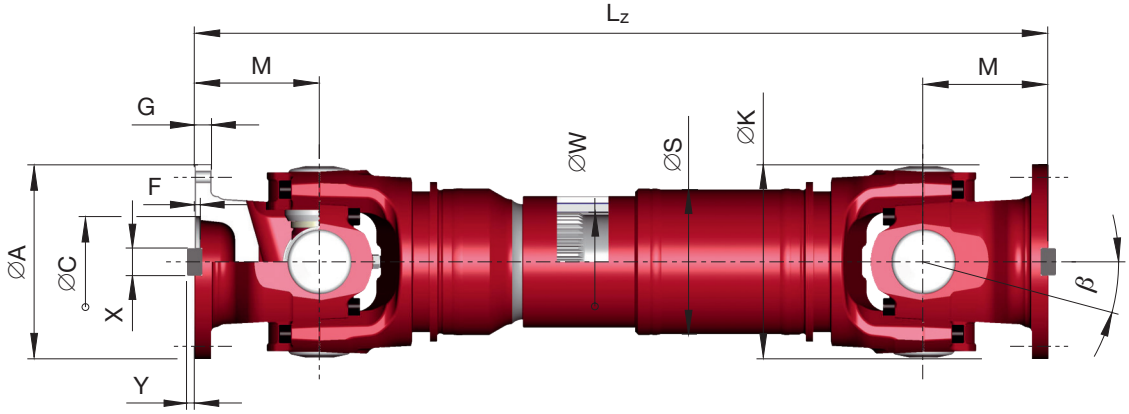

0.01

Shaft size		392.50	392.55	392.60	392.65	392.70	393.75	393.80	393.85	393.90
T_{CS}	kNm	70	105	150	215	295	390	580	750	1.150
T_{DW}	kNm	23	36	53	75	102	140	220	285	435
L_C	–	7,8	25,7	84	265	695	1.700	7.070	15.550	61.550
β	∡°γ	15	15	15	15	15	10	10	10	10
A	mm	225	250	285	315	350	390	435	480	550
K	mm	225	250	285	315	350	390	435	480	550
B	mm	196	218	245	280	310	345	385	425	492
C H7	mm	105	105	125	130	155	170	190	205	250
F[1])	mm	4,5	5	6	7	7	8	10	12	12
G	mm	20	25	27	32	35	40	42	47	50
H	mm	17	19	21	23	23	25	28	31	31
I[2])	–	8	8	8	10	10	10	16	16	16
M	mm	145	165	180	205	225	205	235	265	290
S	mm	167,7 x 9,8	218,2 x 8,7	219 x 13,3	273 x 11,6	273 x 19	273 x 36	323,9 x 36	355,6 x 40	406,4 x 45
X e9	mm	32	40	40	40	50	70	80	90	100
Y	mm	9	12,5	15	15	16	18	20	22,5	22,5
W DIN 5480	mm	120 x 2,5	150 x 3	150 x 3	185 x 5	185 x 5	185 x 5	210 x 5	240 x 5	240 x 5

T_{CS} = **Functional limit torque***
Yield torque 30% over T_{CS}

T_{DW} = **Reversing fatigue torque***
L_c = **Bearing capacity factor***
* See specifications of driveshafts.
β = Maximum deflection angle per joint

1) Effective spigot depth
2) Number of flange holes

© Spicer Gelenkwellenbau GmbH

Data sheet series 392/393 High torque capacity

Design

0.02

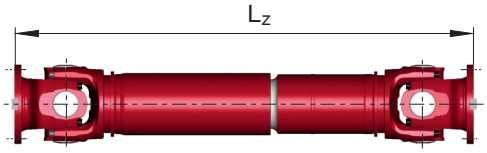

0.03

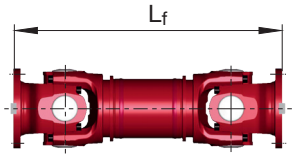

9.01
9.02
9.03

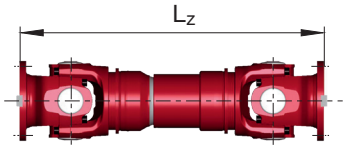

9.04

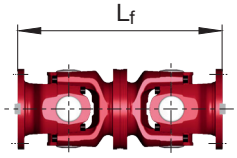

Flange connection with face key

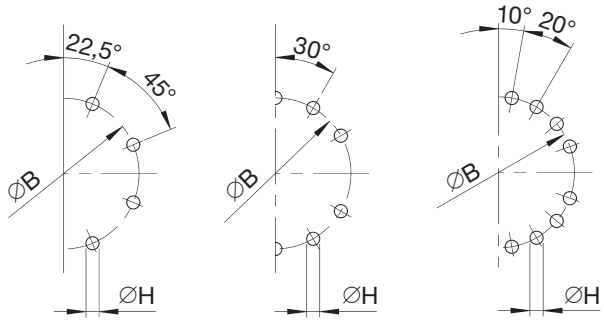

8-hole flange | 10-hole flange | 16-hole flange

Each driveshaft size has a specific hole pattern (see table). Other hole patterns available on request.

Design	Shaft size		392.50		392.55	392.60	392.65	392.70	393.75	393.80	393.85	393.90
0.01	$L_{z\,min}$	mm	890	984	1.010	1.090	1.240	1.310	1.430	1.620	1.820	2.035
	L_a	mm	110	140	135	135	170	170	170	170	190	210
	G	kg	142	148	214	272	406	493	732	1.055	1.477	2.209
	G_R	kg	38,2	38,2	44,9	67,5	74,8	119,0	210,4	255,6	311,3	401,1
	Jm	kgm^2	1,02	1,02	1,43	2,23	3,8	6,5	11,72	17,84	25,26	40,76
	Jm_R	kgm^2	0,239	0,239	0,494	0,717	1,28	1,93	3,02	5,38	7,88	13,3
	C	Nm/rad.	$1{,}03 \times 10^6$	$1{,}02 \times 10^6$	$1{,}42 \times 10^6$	$2{,}36 \times 10^6$	$3{,}1 \times 10^6$	$4{,}4 \times 10^6$	$5{,}19 \times 10^6$	$7{,}86 \times 10^6$	$1{,}09 \times 10^7$	$1{,}43 \times 10^7$
	C_R	Nm/rad.	$2{,}43 \times 10^6$	$2{,}43 \times 10^6$	$5{,}04 \times 10^6$	$7{,}3 \times 10^6$	$1{,}3 \times 10^7$	$1{,}97 \times 10^7$	$3{,}08 \times 10^7$	$5{,}48 \times 10^7$	$8{,}03 \times 10^7$	$1{,}36 \times 10^8$
0.02*	$L_{z\,min}$	mm	1.230		1.390	1.470	1.325	1.395	1.570	1.780	1.975	2.190
	$L_{a\,min}$	mm	300		300	300	250	250	310	330	350	365
	G	kg	188		291	348	515	603	796	1.158	1.648	2.367
	G_R	kg	38,2		44,9	67,5	74,8	119,0	210,4	255,6	311,3	401,1
0.03	$L_{f\,min}$	mm	660		740	820	920	990	977	1.110	1.240	1.380
	G	kg	101		156	215	301	389	538	748	1.052	1.600
	G_R	kg	38,2		44,9	67,5	74,8	119,0	210,4	255,6	311,3	401,1
9.01	L_z	mm	863		983	1.063	1.205	1.275	1.363	1.550	1.750	1.955
	L_a	mm	100		135	135	170	170	170	170	190	210
	G	kg	130		210	269	402	487	718	1.037	1.446	2.177
9.02	L_z	mm	830		920	1.000	1.130	1.200	1.300	1.400	1.630	1.770
	L_a	mm	70		75	75	95	95	90	90	100	100
	G	kg	124		204	263	375	466	641	876	1.325	1.717
9.03	L_z	mm	770		865	945	1.060	1.130	1.200	1.300	1.520	1.680
	L_a	mm	65		75	75	85	85	70	70	80	80
	G	kg	123		197	260	371	457	602	832	1.000	1.657
9.04	L_f	mm	580		660	720	820	900	820	940	1.060	1.160
	G	kg	94		145	207	288	391	485	653	890	1.443

$L_{z\,min}$ = Shortest possible compressed length
L_a = Length compensation
$L_{f\,min}$ = Shortest fixed length
$L_z + L_a$ = Maximum operating length

G = Weight of shaft
G_R = Weight per 1.000 mm tube
Jm = Moment of inertia
Jm_R = Moment of inertia per 1.000 mm tube

C = Torsional stiffness of shaft without tube
C_R = Torsional stiffness per 1.000 mm tube
* Larger length compensation available on request

© Spicer Gelenkwellenbau GmbH

Data sheet series 492 Maximum torque capacity

0.01 with length compensation, tubular design
0.03 without length compensation, tubular design
9.01 with length compensation, short design
9.02 with length compensation, short design
9.03 with length compensation, short design
9.04 without length compensation, double flange shaft design

Design

0.01

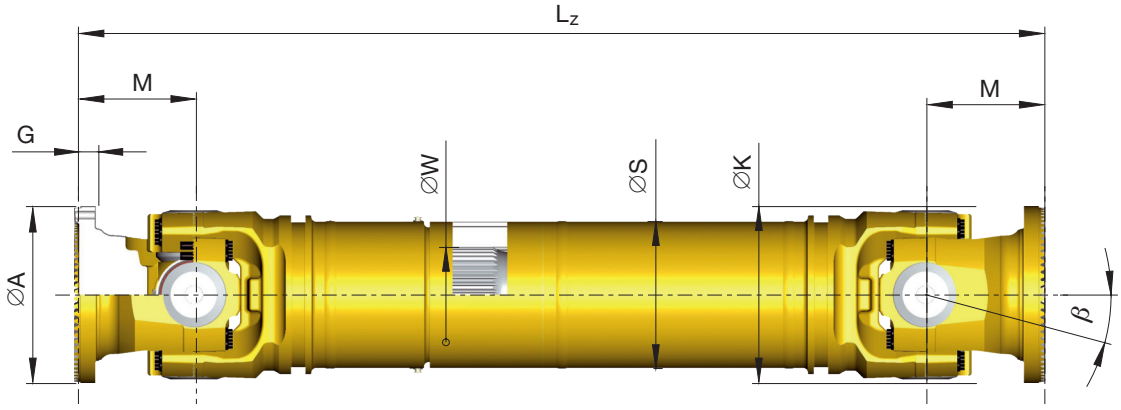

Shaft size		492.60	492.65	492.70	492.75		492.80		492.85		492.90	
T_{CS}	kNm	210	250	340	440	410	650	580	850	770	1.300	1.170
T_{DW}	kNm	100	115	160	210	190	280	250	400	360	600	540
L_c	–	110	330	855	2.120		7.390		17.370		60.120	
β	∢°	7	7	7	10	15	10	15	10	15	10	15
A	mm	285	315	350	390		435		480		550	
K	mm	285	315	350	390		435		480		550	
B	mm	255	280	315	350		395		445		510	
G	mm	35	35	40	45		50		55		65	
H	mm	15	17	17	19		19		21		23	
I[1])	–	10	10	12	12		16		16		16	
M	mm	200	220	240	260		280		300		330	
S	mm	244,5 x 30	254 x 36	292 x 36	323,9 x 36		355,6 x 40		406,4 x 40		457 x 50	
W *DIN 5480*	mm	185 x 5	185 x 5	210 x 5	210 x 5		240 x 5		240 x 5		290 x 8	

T_{CS} = Functional limit torque*
Yield torque 30% over T_{CS}
T_{DW} = Reversing fatigue torque*
L_c = Bearing capacity factor*

* See specifications of driveshafts.
β = Maximum deflection angle per joint
1) Number of flange holes

© Spicer Gelenkwellenbau GmbH

Data sheet series 492 Maximum torque capacity

Design

0.03

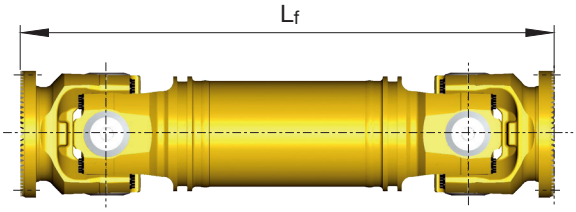

9.01
9.02
9.03

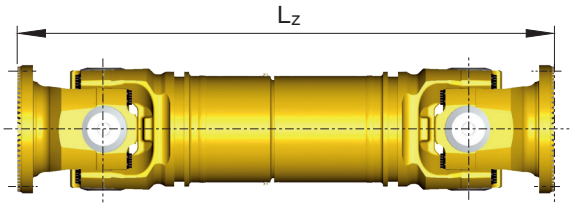

9.04

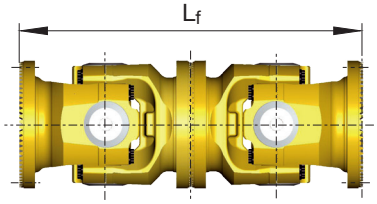

Flange connection with Hirth-serration

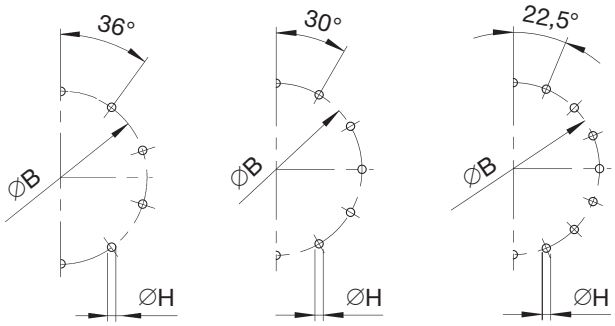

10-hole flange | 12-hole flange | 16-hole flange

Each driveshaft size has a specific hole pattern (see table). Other hole patterns available on request.

Design	Shaft size		492.60	492.65	492.70	492.75	492.80	492.85	492.90
0.01	$L_{z\,min}$	mm	1.440	1.520	1.680	1.750	1.900	2.130	2.415
	L_a	mm	135	135	150	170	170	190	210
	G	kg	472	568	788	1.025	1.355	1.873	2.750
	G_R	kg	121,7	193,5	227,3	255,6	311,3	361,4	501,9
	Jm	kgm^2	4,16	5,16	7,73	15	30,7	50,4	92,7
	Jm_R	kgm^2	1,52	2,36	3,80	5,38	7,88	12,28	21,1
	C	Nm/rad.	$3{,}32 \times 10^6$	$4{,}31 \times 10^6$	$5{,}97 \times 10^6$	$6{,}76 \times 10^6$	$9{,}7 \times 10^6$	$13{,}64 \times 10^6$	$19{,}44 \times 10^6$
	C_R	Nm/rad.	$1{,}55 \times 10^7$	$2{,}41 \times 10^7$	$3{,}87 \times 10^7$	$5{,}48 \times 10^7$	$8{,}03 \times 10^7$	$12{,}51 \times 10^7$	$21{,}5 \times 10^7$
0.03	$L_{f\,min}$	mm	940	1.020	1.130	1.220	1.320	1.450	1.620
	G	kg	311	407	557	819	1.040	1.330	1.880
	G_R	kg	121,7	193,5	227,3	255,6	311,3	361,4	501,9
9.01	L_z	mm	1.380	1.460	1.620	1.700	1.840	2.050	2.340
	L_a	mm	135	135	150	170	170	190	210
	G	kg	465	559	777	1.010	1.340	1.850	2.710
9.04	L_f	mm	800	880	960	1.040	1.120	1.200	1.320
	G	kg	284	374	479	590	870	1.190	1.734

$L_{z\,min}$ = Shortest possible compressed length
L_a = Length compensation
$L_{f\,min}$ = Shortest fixed length
$L_z + L_a$ = Maximum operating length

G = Weight of shaft
G_R = Weight per 1.000 mm tube
Jm = Moment of inertia
Jm_R = Moment of inertia per 1.000 mm tube

C = Torsional stiffness of shaft without tube
C_R = Torsional stiffness per 1.000 mm tube

Length dimensions (L_z/L_a) of the designs 0.02 · 9.02 · 9.03 available on request.

© Spicer Gelenkwellenbau GmbH

Data sheet series 498

0.01 with length compensation, tubular design
0.03 without length compensation, tubular design
9.04 without length compensation, double flange shaft design

Design

0.01

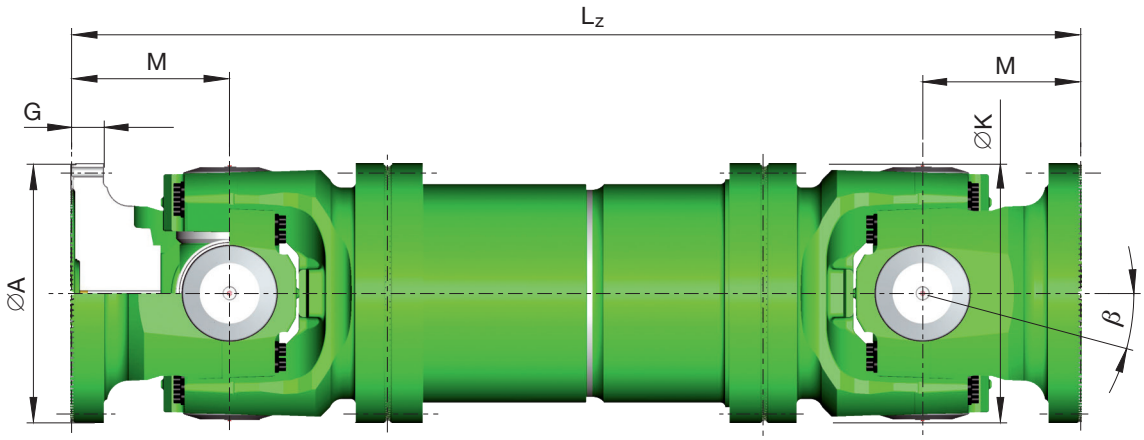

Shaft size		498.00			498.05			498.10			498.15		
T_{CS}	kNm	1.880	1.620	1.430	2.340	2.080	1.750	3.000	2.600	2.200	3.640	3.100	2.700
T_{DW}	kNm	900	780	680	1.120	1.000	840	1.430	1.250	1.050	1.750	1.500	1.300
L_c	–	0,115	0,144	0,154	0,224	0,322	0,343	0,530	0,684	0,720	1,09	1,35	1,43
		x 10^6	x 10^6	x 10^6	x 10^6	x 10^6	x 10^6	x 10^6	x 10^6	x 10^6	x 10^6	x 10^6	x 10^6
β	∢°	5	10	15	5	10	15	5	10	15	5	10	15
A	mm	600			650			700			750		
K	mm	600			650			700			750		
B	mm	555			605			655			695		
G	mm	75			80			90			95		
H	mm	26			26			26			32		
l[1])	–	20			20			24			24		
M	mm	370	370	390	390	390	410	420	420	440	460	460	480

Shaft size		498.20			498.25			498.30			498.35		
T_{CS}	kNm	4.420	3.800	3.300	5.300	4.500	4.050	6.300	5.400	4.700	7.400	6.500	5.600
T_{DW}	kNm	2.120	1.850	1.600	2.550	2.200	1.950	3.050	2.650	2.250	3.500	3.100	2.700
L_c	–	1,69	2,14	2,55	3,26	4,01	4,681	7,05	7,86	8,29	9,71	10,7	14,24
		x 10^6	x 10^6	x 10^6	x 10^6	x 10^6	x 10^6	x 10^6	x 10^6	x 10^6	x 10^6	x 10^6	x 10^6
β	∢°	5	10	15	5	10	15	5	10	15	5	10	15
A	mm	800			850			900			950		
K	mm	800			850			900			950		
B	mm	745			785			835			885		
G	mm	100			105			110			120		
H	mm	32			38			38			38		
l[1])	–	24			24			24			24		
M	mm	480	480	500	530	530	555	555	555	580	580	580	610

T_{CS} = Functional limit torque*
Yield torque 30% over T_{CS}
T_{DW} = Reversing fatigue torque*
L_c = Bearing capacity factor*

* See specifications of driveshafts.
β = Maximum deflection angle per joint
1) Number of flange holes

© Spicer Gelenkwellenbau GmbH

Data sheet series 498

Design

0.03

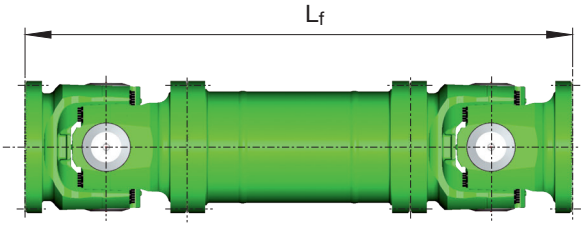

9.04

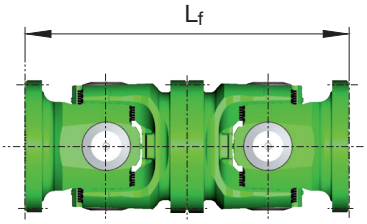

Flange connection with Hirth-serration

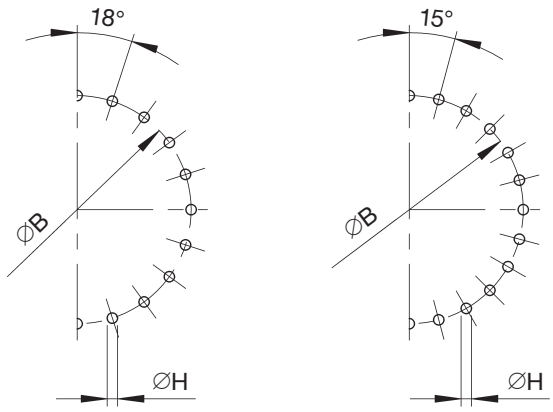

20-hole flange

24-hole flange

Each driveshaft size has a specific hole pattern (see table). Other hole patterns available on request.

Shaft size		498.40			498.45			498.50			498.55			498.60		
T_{CS}	kNm	8.700	7.500	6.500	10.000	8.700	7.500	11.500	10.000	8.600	13.200	11.400	9.900	15.000	13.000	11.200
T_{DW}	kNm	4.200	3.600	3.100	4.800	4.200	3.600	5.500	4.800	4.100	6.300	5.500	4.700	7.200	6.200	5.400
L_C	–	16,1	17,4	23,78	24,4	28,71	38,73	36,4	42,63	61,67	56,3	70,8	96,19	89,9	102	147,2
		x 10^6	x 10^6	x 10^6	x 10^6	x 10^6	x 10^6	x 10^6	x 10^6	x 10^6	x 10^6	x 10^6	x 10^6	x 10^6	x 10^6	x 10^6
β	∢°	5	10	15	5	10	15	5	10	15	5	10	15	5	10	15
A	mm	1.000			1.050			1.100			1.150			1.200		
K	mm	1.000			1.050			1.100			1.150			1.200		
B	mm	925			975			1.025			1.065			1.115		
G	mm	125			130			135			140			150		
H	mm	44			44			44			50			50		
I[1])	–	20			20			20			20			20		
M	mm	625	625	655	645	645	675	670	670	700	715	715	745	740	740	775

GWB™ driveshaft series „598“ in fully forged design with maximum torque capacity are available on request.

Length dimensions (L_Z/L_f/L_a) of the designs 0.01 · 0.03 · 9.04 available on request.

© Spicer Gelenkwellenbau GmbH

Data sheet series 587/190/390 Super short designs

9.06 driveshaft with length compensation,
super short design

Series 587

Design

9.06

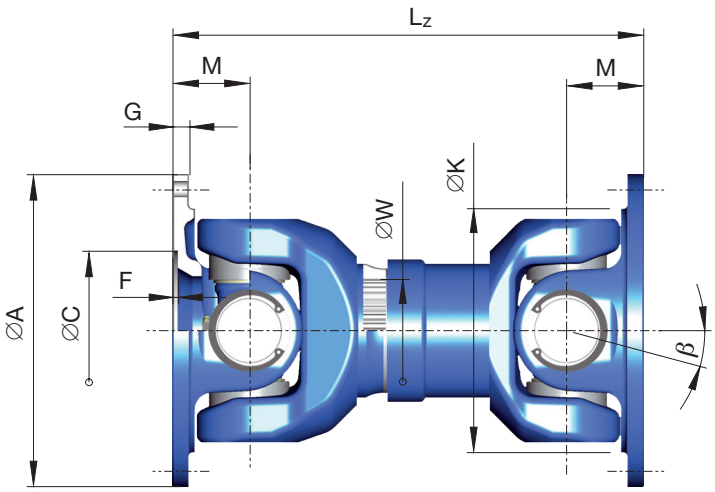

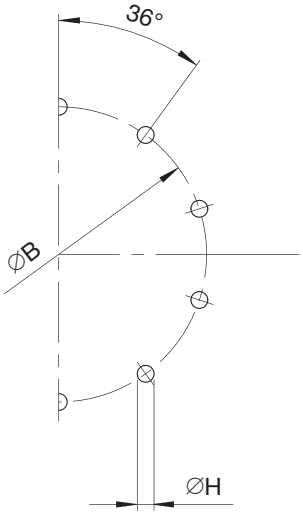

10-hole flange

Shaft size		587.50	190.55	390.60	190.65	390.70
T_{CS}	kNm	43	33	60	68	130
T_{DW}	kNm	13	11	27	25	53
L_c	–	1,8	7	56,7	161,5	510
β	∢°γ	5	5	5	5	5
A	mm	275	305	348	360	405
K	mm	215	250	285	315	350
B *± 0,1 mm*	mm	248	275	314	328	370
C *H7*	mm	140	140	175	175	220
F[1])	mm	4,5	5,5	6	6	6,5
G	mm	15	15	18	18	22
H *+ 0,2 mm*	mm	14,1	16,1	18,1	18,1	20,1
I[2])	–	10	10	10	10	10
M	mm	68	80	90	100	108
W *DIN 5482/5480*	mm	90 x 2,5	100 x 94	115 x 2,5	130 x 3	150 x 3

T_{CS} = Functional limit torque*
Yield torque 30% over T_{CS}
T_{DW} = Reversing fatigue torque*
L_c = Bearing capacity factor*

* See specifications of driveshafts.
β = Maximum deflection angle per joint
1) Effective spigot depth
2) Number of flange holes

© Spicer Gelenkwellenbau GmbH

Data sheet series 587/190/390 Super short designs

Series 190/390

Design

9.06

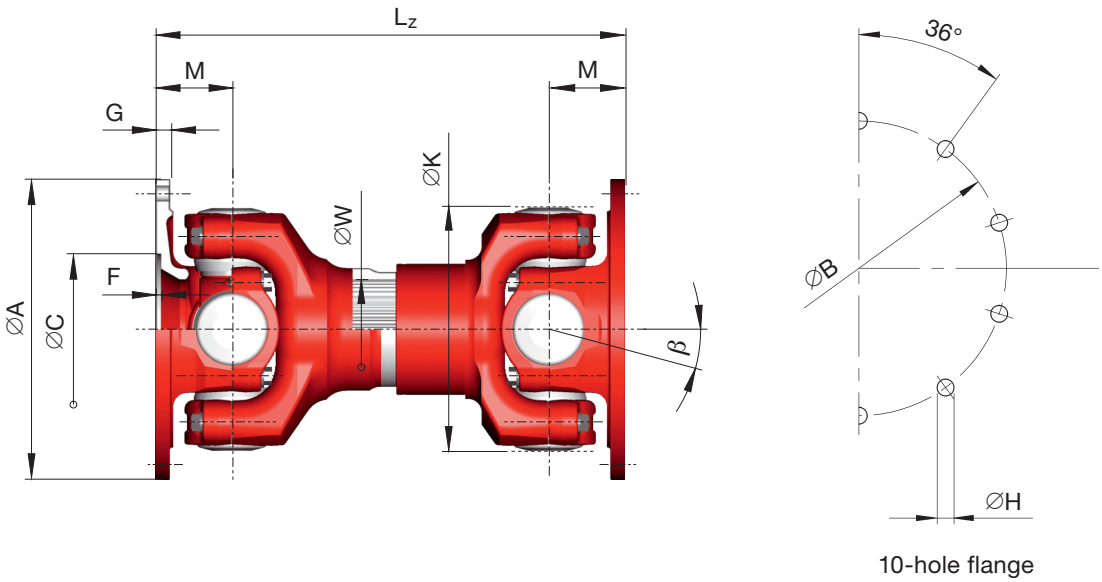

10-hole flange

Design	Shaft size		587.50	190.55	390.60	190.65	390.70
9.06	L_z	mm	415	495	545	600	688
	L_a	mm	40	40	80	40	80
	G	kg	60	98	131	169	252
	Jm	kgm^2	0,33	0,624	1,250	2,286	3,455

L_z = Shortest compressed length
L_a = Length compensation
$L_z + L_a$ = Maximum operating length

G = Weight of shaft
Jm = Moment of inertia

© Spicer Gelenkwellenbau GmbH

Data sheet series 330 Quick release couplings

Design with spiral serration for higher speeds

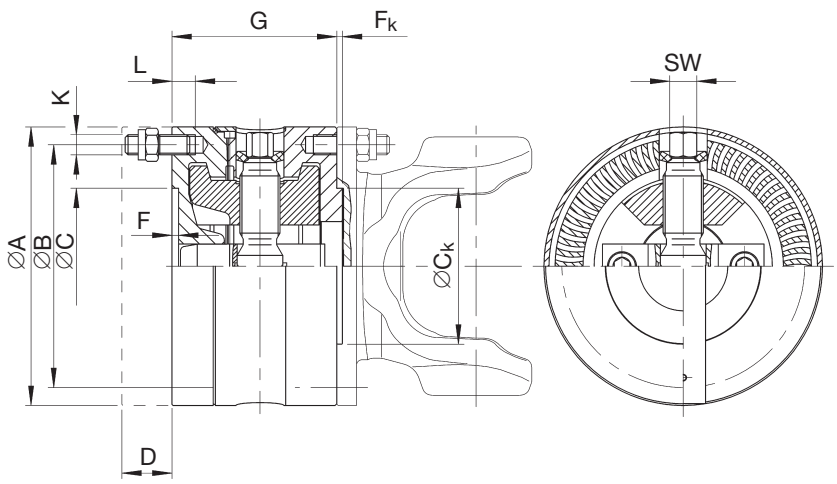

Connection for series 687/688
Connection for series 587
Connection for series 392
with face key

For hole distribution, see data sheets of the corresponding driveshaft.

Coupling size			330.10	330.20	330.30		330.40	330.50				330.55	
Shaft connection			687/688.15	687/688.20	687/688.25 687/688.35	687/688.30 687/688.40	687/688.40 687/688.45	687/688.45	687/688.55 687/688.65	587.50	392.50	587.55	392.55
Model		Nr.	000	003	003		003	000			001	000	001
	A	mm	100	130	150		180	225			225	250	250
	B	mm	84	101,5	130		155,5	196			196	218	218
	C[1])	mm	57	75	90		110	140			105	140	105
	C_k[11])	mm	57	75	90		110	140			105	140	105
	D[2])	mm	20	38	40		40	45			45	45	45
	F	mm	2,5	2,5	3,5		4	5			5	6	6
	F_k	mm	$2{,}3_{-0{,}2}$	$2{,}3_{-0{,}15}$	$2{,}3_{-0{,}2}$		$2{,}3_{-0{,}15}$	$4_{-0{,}2}$			$4_{-0{,}2}$	$5_{-0{,}2}$	$5_{-0{,}2}$
	G	mm	76	100	100		112	144			144	148	162
	I[3])	–	6	8	8		8	8			8	8	8
	K[4])	–	M 8 x 18	M 10 x 22	M 12 x 25		M 14 x 28	M 16 x 35			M 16 x 40	M 18 x 40	M 18 x 45
	L[10])	mm	10	11	14		20	18			18	21	21
	G_k[12])	kg	4,7	7,5	10,6		16,4	34			36	40	49
Ta Nut		Nm	35	69	120		190	295			295	405	405
Extension [5])		Nr.	2.365/13 M	2.365/17 M	2.365/19 M		22 M	24 R			24 R	27 R	27 R
Ta Spindle		Nm	30	45	80		100	190			190	220	220
Socket wrench [6])		Nr.	1/2“ D 19 SW 13		1/2“ D 19 SW 17			1/2“ D 19 SW 22					

Operating instructions

Engaging and disengaging the coupling

Engaging and disengaging are done by operating the threaded spindle located in the inner part of the coupling. The spindle can be reached from two sides and be operated. The spindle is tightened by means of a socket wrench (see table).

Notice:

1. Before engaging the coupling, make sure that the coupling teeth are properly fitted.
2. The engagement direction is marked by arrows. The spindle may be tightened either clockwise or counter-clockwise.
3. The joint with the coupling component falls back when disengaged. **Caution: Danger of injury!**

In case of a subsequent installation of the quick release coupling, the driveshaft must be correspondingly shorter. The threaded spindles of the coupling are lubricated by the supplier with MoS_2. Relubrication is recommended from time to time.

© Spicer Gelenkwellenbau GmbH

Data sheet series 230 Quick release couplings

Design with trapezoidal serration for speeds up to 1.000 rpm

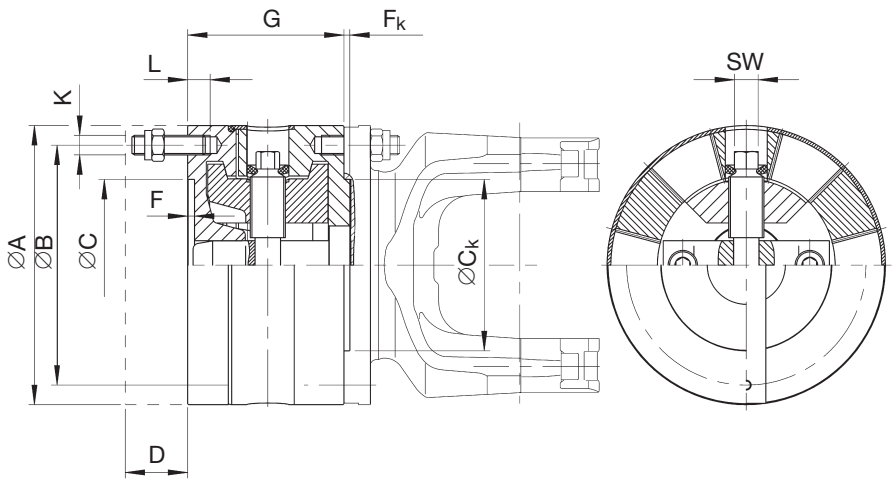

Connection for series 390
Connection for series 392/393
with face key

For hole distribution, see data sheets of the corresponding driveshaft.

Coupling size			230.60		230.65		230.70		230.75		230.80	
Shaft connection			390.60	392.60	390.65	392.65	390.70	392.70	390.75	393.75	390.80	393.80
Model		Nr.	000	001	000	001	000	001	000	001	000	001
	A	mm	285	285	315	315	350	350	390	390	435	435
	B	mm	245	245	280	280	310	310	345	345	385	385
	C[1])	mm	175	125	175	130	220	155	250	170	280	190
	C_k[11])	mm	175	125	175	130	220	155	250	170	280	190
	D[2])	mm	64	64	66	66	72	72	82	82	92	92
	F	mm	7	7	7	8	8	8	8	8	10	10
	F_k	mm	$6_{-0,2}$	$6_{-0,5}$	$6_{-0,2}$	$7_{-0,5}$	$7_{-0,3}$	$7_{-0,5}$	$7_{-0,2}$	$7_{-0,5}$	$9_{-0,5}$	$9_{-0,5}$
	G	mm	160	174	172	192	184	204	196	220	226	246
	I[3])	–	8	8	8	10	10	10	10	10	10	16
	K[4])	–	M 20 x 45	M 20 x 55	M 22 x 50	M 22 x 60	M 22 x 50	M 22 x 60	M 24 x 55	M 24 x 70	M 27 x 65	M 27 x 75
	L[10])	mm	23	23	25	25	25	25	27	27	30	30
	G_k[12])	kg	66	71	83	95	110	120	143	150	210	230
Ta Nut		Nm	580	580	780	780	780	780	1.000	1.000	1.500	1.500
Extension [5])		Nr.	30 R	30 R	32 R	32 R	32 R	32 R	36 R	36 R	41 R	41 R
Ta Spindle		Nm	290	290	400	400	550	550	680	680	950[9])	950[9])
Socket wrench [6])		Nr.	3/4“ D 32 SW 22		3/4“ D 32 SW 27		3/4“ D 32 SW 27		3/4“ D 32 SW 32		3/4“ D 32 SW 36	
X = 4 spanners [8])		Nr.			-						TD 750	

1. Spigot fit H7
2. Disengaging movement for separation of the coupling
3. Number of stud bolts per flange
4. Dimensions of the bolt connections
   Stud bolt DIN 938
   Self-locking hexagon nut DIN 980
5. Jaw or ring extension in accordance with Dana standard N 4.2.5
6. Gedore socket spanner set for tightening the spindle
7. Rahsol torque meter
8. Force multiplier spanner x = 4 (TD 750)
9. Adjusting moment of the torque wrench 756 C = 238 Nm
10. Thread depth
11. Fit h6 up to series 390
    Fit f8 for series 392/393
12. G_K = Weight of coupling

Ta = Tightening torques of flange boltings and of the threaded coupling spindles

Torque wrench[7])	Torque range	
Type	from	to
756 B	20 Nm	100 Nm
756 C	80 Nm	300 Nm
756 D	280 Nm	760 Nm

For applications with speeds higher than 1.000 rpm, please contact Dana engineers. Other designs available on request.

© Spicer Gelenkwellenbau GmbH

Data sheet Journal cross assemblies (unit packs)

Design 7.06 journal cross, complete

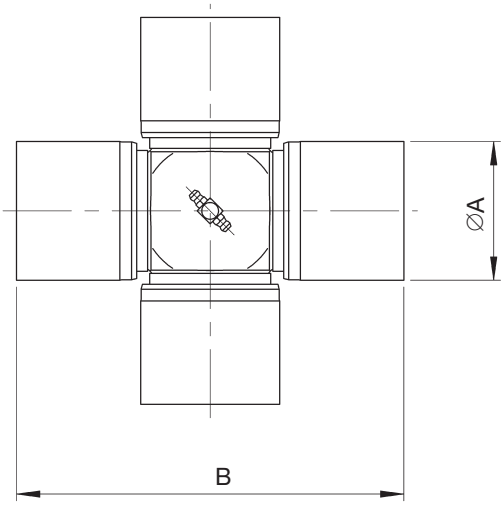

Shaft size	∅ A mm	B mm
473.10	15	41
473.20	19	49,2
473.30	22	59
287.00	26	69,8
287.10	30	81,8
287.20	35	96,8
587.10	35	96,8
587.15	42	104,5
587.20	48	116,5
587.30	52	133
587.35/36	57	144
587.42	57	152,06
587.48	65	172
587.50	72	185
587.55	74	217
587.60	83	231,4
687/688.15	27,0	74,5
687/688.20	30,2	81,8
687/688.25	34,9	92,0
687/688.30	34,9	106,4
687/688.35	42,0	119,4
687/688.40	47,6	135,17
687/688.45	52,0	147,2
687/688.55	57,0	152,0
687/688.65	65,0	172,0

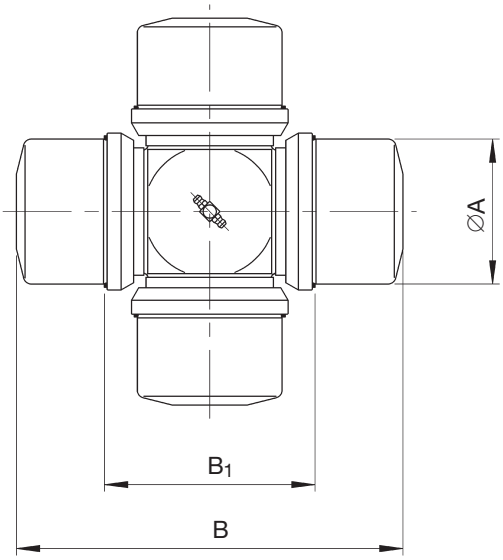

Shaft size	∅ A mm	B mm	B_1 mm
190.50	65	220	143
190.55	74	244	154
190.60	83	280	175
190.65	95	308	190
190.70	110	340	210
190.75	120	379	235
190.80	130	425	262
390.60	83	235,8	129
390.65	95	258,8	139
390.70	110	293,4	160
390.75	120	325,2	176
390.80	130	363,2	196
392.50*	74	222	129
392.55*	83	246	139
392.60*	95	279,6	160
392.65*	110	309,6	176
392.70*	120	343,4	196
393.75*	130	383,4	216
393.80*	154	430	250
393.85*	170	464	276
393.90*	195	530	315

Journal cross assemblies are only supplied as complete units. For orders, please state shaft size or, if known, the drawing number of the complete driveshaft. For lubrication of journal cross assemblies, see Installation and Maintenance/Safety Instructions.

* The dimensions of the journal cross assemblies for series 392/393 are equal to 292.

Ultra heavy-duty unit pack sets for series 398 have been discontinued.

They are still available for series 492 and 498 on request.

© Spicer Gelenkwellenbau GmbH

Data sheet Flange connection with serration

Hirth-serration

- Flank angle 40°
- High transmission capacity
- Form locking
- Self-centering

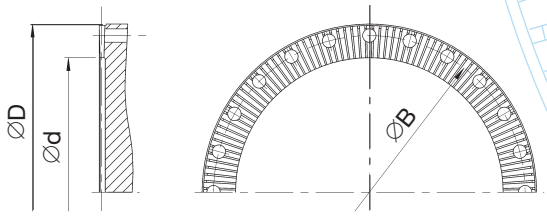

D mm	d mm	z	B mm	i*
225	180	48	200	8 x M 12
250	200	48	225	8 x M 14
285	225	60	255	10 x M 14
315	250	60	280	10 x M 16
350	280	72	315	12 x M 16
390	315	72	350	12 x M 18
435	345	96	395	16 x M 18
480	370	96	445	16 x M 20
550	440	96	510	16 x M 22
600	480	120	555	20 x M 24
650	520	120	605	20 x M 24
700	570	120	655	24 x M 24
750	600	144	695	24 x M 30
800	650	144	745	24 x M 30
850	680	144	785	24 x M 36
900	710	144	835	24 x M 36
950	760	144	885	24 x M 36
1.000	800	180	925	20 x M 42 x 3
1.050	840	180	975	20 x M 42 x 3
1.100	880	180	1.025	20 x M 42 x 3
1.150	925	180	1.065	20 x M 48 x 3
1.200	960	180	1.115	20 x M 48 x 3

Klingelnberg-serration

- Flank angle 25°
- High transmission capacity
- Form locking
- Self-centering

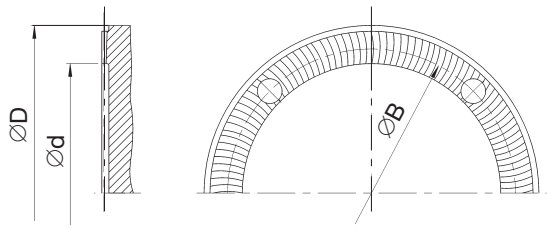

D mm	d mm	z	B mm	i
95	65	16	84	4 x M 8
115	80	24	101,5	4 x M 10
145	110	24	130	4 x M 12
175	140	32	155,5	4 x M 16
215	175	48	196	4 x M 16
240	195	48	218	4 x M 18
275	220	48	245	4 x M 20
305	245	48	280	4 x M 20
340	280	72	310	4 x M 22
380	315	72	345	6 x M 24
425	355	96	385	6 x M 27
465	390	96	425	8 x M 30
535	455	96	492	8 x M 30

D = Outside diameter
d = Inside diameter
Z = Number of teeth
B = Pitch diameter
i = Number and size of bolts
Bolt material: 10.9

* Reduced number of bolts by special arrangement only (e.g., for use as quick-change system)

Other diameters available on request.

© Spicer Gelenkwellenbau GmbH

Data sheet Face key connection series 687/688/587/390

The driveshaft for series 687/688/587/390 can also be manufactured with face key connection on request.

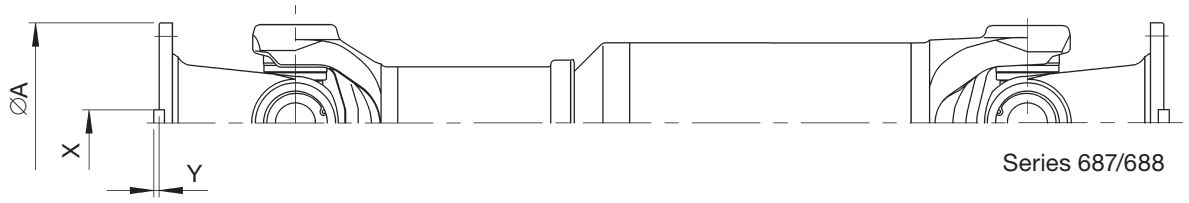

Series 687/688

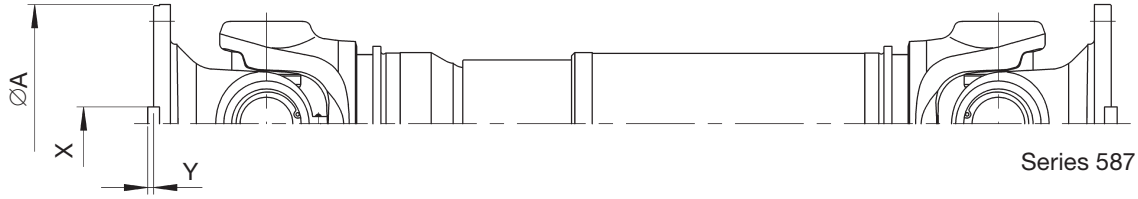

Series 587

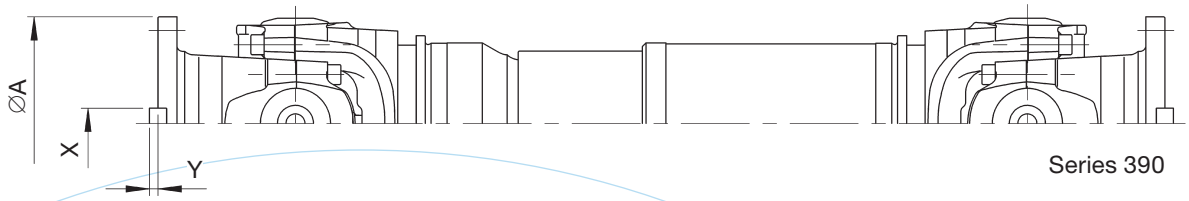

Series 390

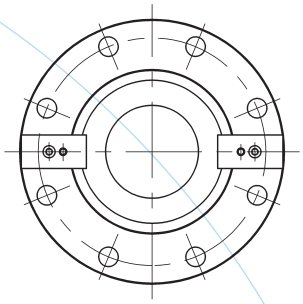

Driveshaft connection				
Shaft size	Ø A mm	I[2]) x H[1])	X e9 mm	Y mm
687/688.35 687/688.40	150	8 x 13	20	4,0
687/688.45 687/688.55 687/688.65	180	8 x 15 10 x 17 10 x 17	25	4,5
587.50	225	8 x 17	32	5,5
587.55	250	8 x 19	40	7,0
587.60	285	8 x 21	45	8,0
390.60	285	8 x 21	45	8,0
390.65	315	8 x 23	45	8,0
390.70	350	10 x 23	50	9,0
390.75	390	10 x 25	50	9,0
390.80	435	10 x 28	63	12,0

1. Tolerance + 0,2 mm (for 390.75 and 390.80, tolerance + 0,5 mm)

2. Number of flange holes

© Spicer Gelenkwellenbau GmbH

Data sheet Standard companion flanges

Standard companion flanges can be manufactured with cylindrical bore holes and face keyway (material C45; hardened and tempered 750 – 900 N/mm²) on request. For designs deviating from the standard, e.g., oil pressure connection, conical bore, flat journal, and material, relevant drawings are required.

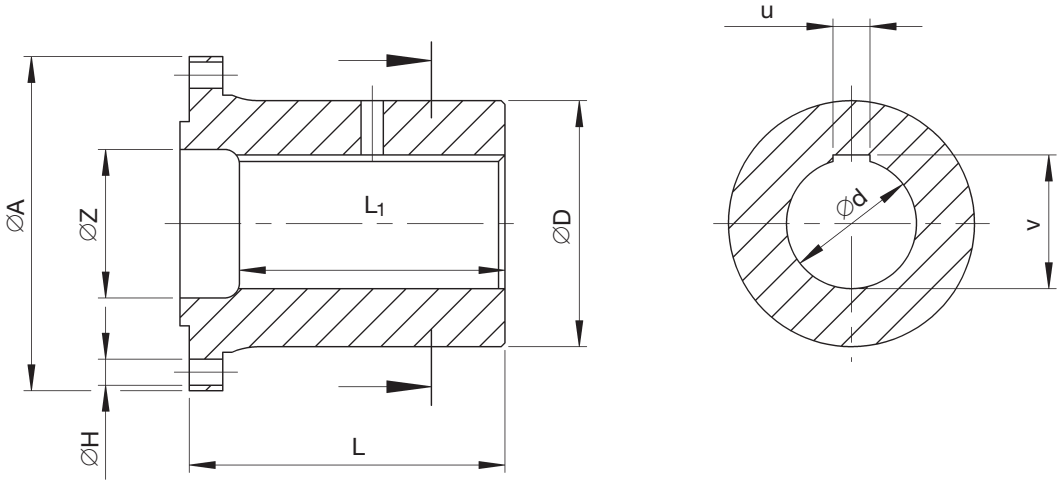

Please state with your order:

Shaft size = _____

Flange dia. A = _____ mm

I x H = __ number of holes x ∅ ___ mm

L = _____ mm

L_1 = _____ mm

Z = _____ mm

D = _____ mm

d = _____ mm

u = _____ mm

v = _____ mm

Driveshaft connection			Dimension
Shaft size	∅ A mm	I[2]) x H[1])	∅ D_{max} mm
687/688.15 687/688.20	100	6 x 8,25	69,5
687/688.15 687/688.20 687/688.25 687/688.30	120	8 x 10,25	84
687/688.25	150	8 x 12,25	110,3
687/688.30		8 x 12,25	
687/688.35		8 x 12,1	
687/688.40		8 x 12,1	
687/688.35 687/688.40 687/688.45	180	8 x 14,1	132,5
687/688.55 687/688.65		10 x 16,1	
687/688.45 687/688.55 687/688.65 587.50	225	8 x 16,1	171
587.50 587.55	250	8 x 18,1	189
587.60 390.60	285	8 x 20,1	213
390.65	315	8 x 22,1	247
390.70	350	10 x 22,1	277
390.75	390	10 x 24,1	308
390.80	435	10 x 27,1	342

1. Tolerance + 0,2 mm (for 390.75 and 390.80, tolerance + 0,5 mm)
2. Number of flange holes

© Spicer Gelenkwellenbau GmbH

Design features series 687/688/587

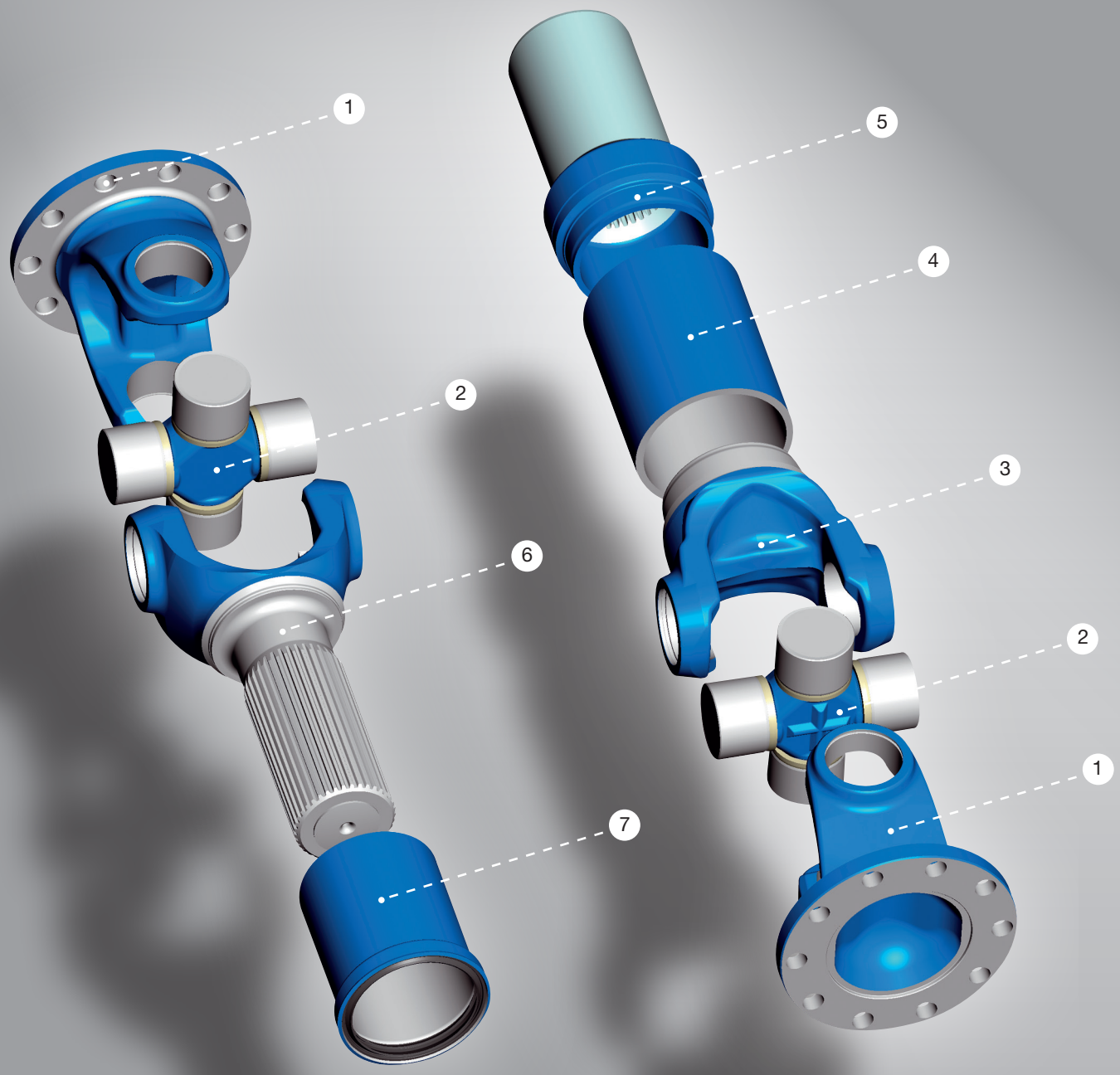

Main components of the driveshafts

1. Flange yoke
2. Journal cross assembly
3. Tube yoke
4. Tube
5. Sliding muff
6. Yoke shaft
7. Cover tube assembly

© Spicer Gelenkwellenbau GmbH

Design features series 390/392/393

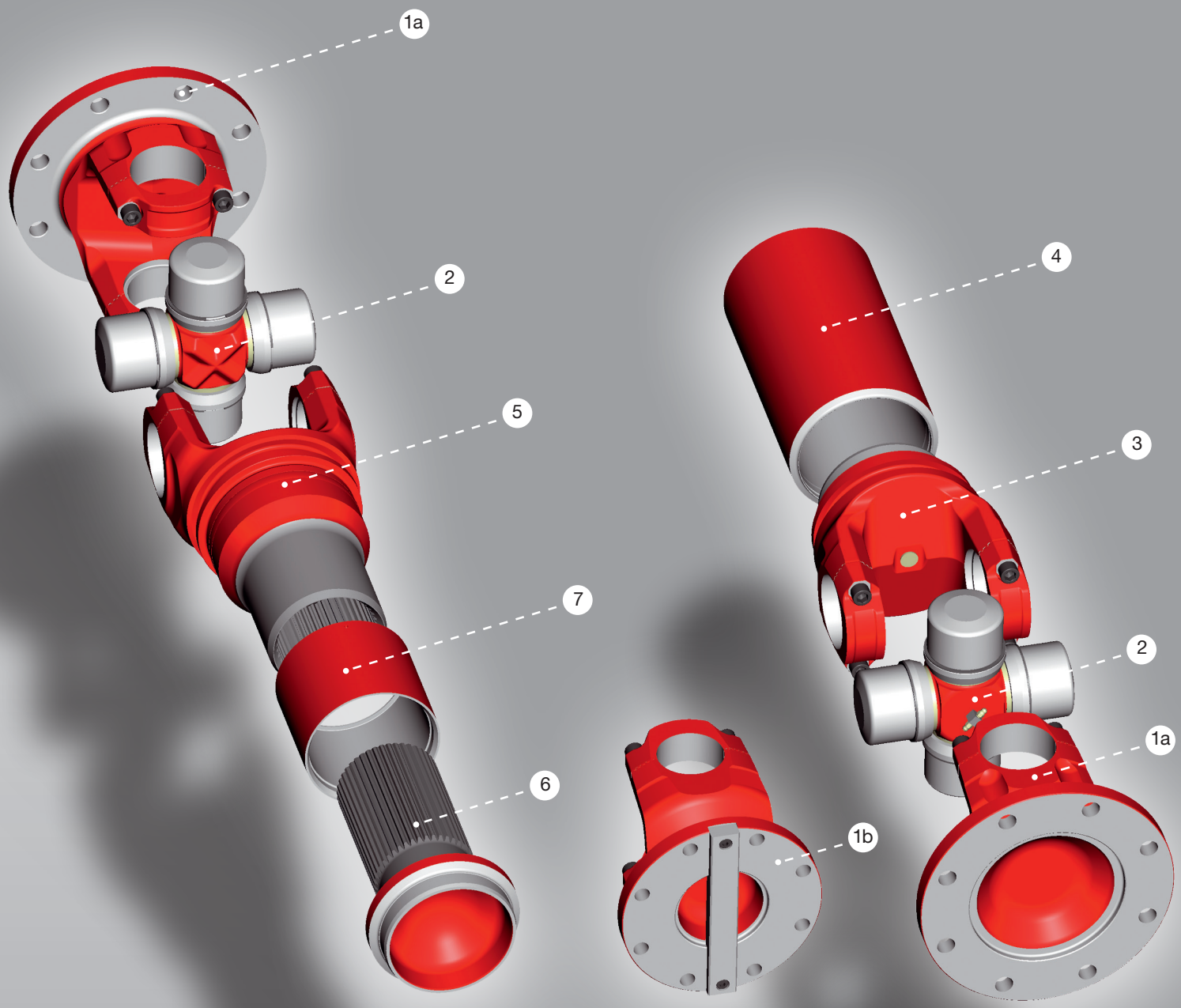

Main components of the driveshafts

1a. Flange yoke for series 390
(friction connection)
1b. Flange yoke for series 392/393
(face key connection)
2. Journal cross assembly
3. Tube yoke
4. Tube
5. Tube yoke with sliding muff
6. Slip stub shaft
7. Cover tube assembly

© Spicer Gelenkwellenbau GmbH

General theoretical instructions

Kinematics of Hooke's joints

1. The joints

In the theory of mechanics, the cardan joint (or Hooke's joint) is defined as a spatial or spherical drive unit with a non-uniform gear ratio or transmission. The transmission behavior of this joint is described by the following equation:

$$\alpha_2 = \arctan\left(\frac{1}{\cos\beta} \cdot \tan\alpha_1\right)$$

β = Deflection angle of joint [∢°]
α_1 = angle of rotation drive side
α_2 = angle of rotation driven side

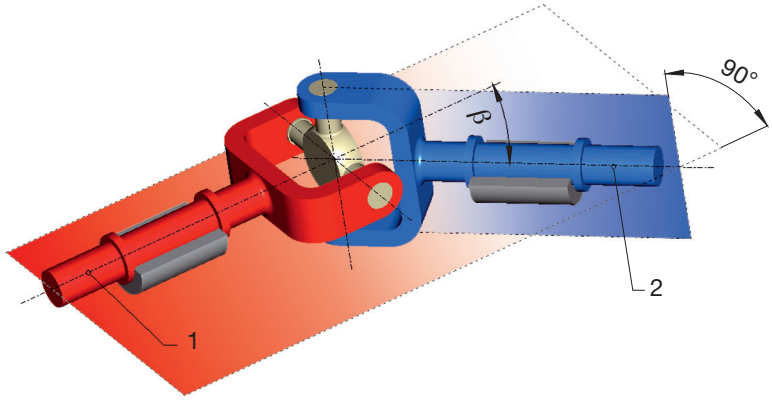

In this equation, α_2 is the momentary rotation angle of the driven shaft 2. The motion behavior of the driving and the driven ends is shown in the following diagram. The asynchronous and/or non-homokinematic running of the shaft 2 is shown in the periodical oscillation of the asynchronous line α_2 around the synchronous line α_1 (dotted line).

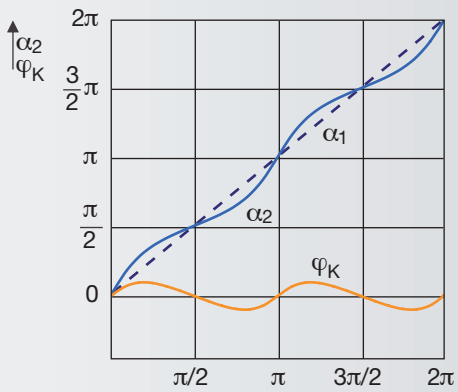

A measure for the non-uniformity is the difference of the rotation angles α_2 and α_1 or the transmission ratio of the angular speeds ω_2 and ω_1. Expressed by an equation, that means:

a) Rotation angle difference:

$$\varphi_K = \alpha_2 - \alpha_1$$

(also called gimbal error)

$$\varphi_K = \arctan\left(\frac{1}{\cos\beta} \cdot \tan\alpha_1\right) - \alpha_1$$

$$\varphi_{K\,max.} = \arctan\left(\frac{\cos\beta - 1}{2\sqrt{\cos\beta}}\right)$$

b) Ratio:

$$i = \frac{\omega_2}{\omega_1} = \frac{\cos\beta}{1 - \sin^2\beta \cdot \cos^2\alpha_1}$$

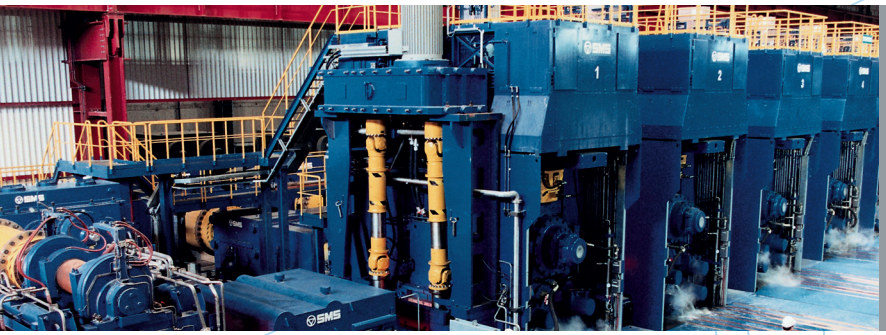

© Spicer Gelenkwellenbau GmbH

General theoretical instructions

The following diagram shows the ratio $i = \omega_2/\omega_1$ for a full revolution of the universal joint for $\beta = 60°$.

The degree of non-uniformity U is defined by:

$$U = i_{max.} - i_{min.} = \tan\beta \cdot \sin\beta$$

Where:

$$i_{max.} = \frac{1}{\cos\beta}$$

$$i_{min.} = \cos\beta$$

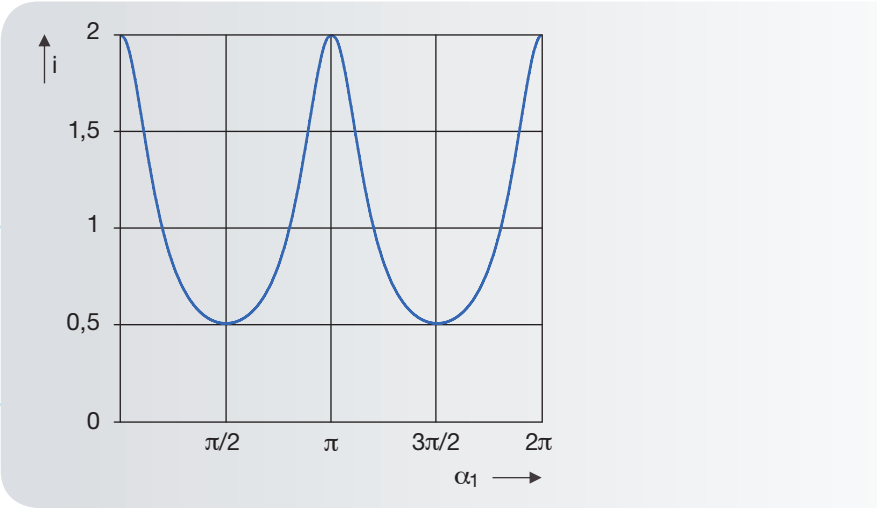

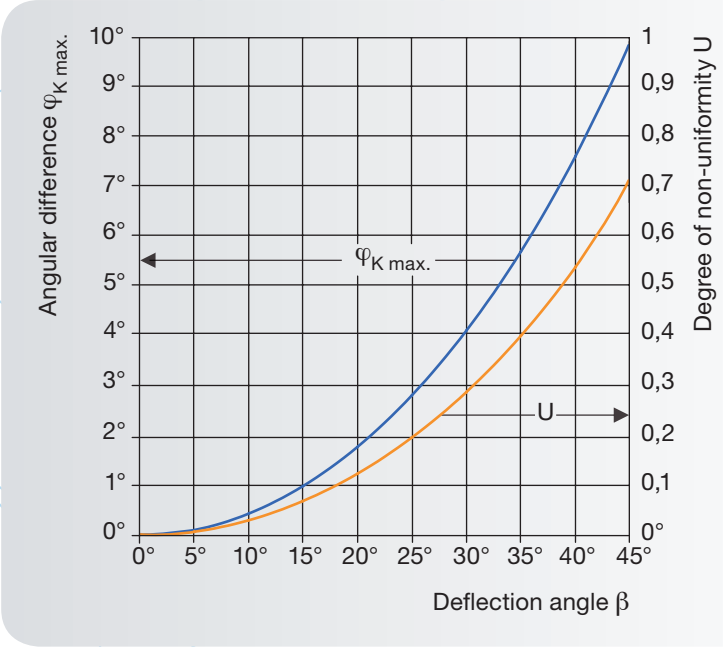

The diagram shows the course of the degree of non-uniformity U and of the angular difference $\varphi_{K\ max.}$ as a function of the deflection angle of the joint from 0 to 45°.

From the motion equation it is evident that a homokinematic motion behavior corresponding to the dotted line under 45° – as shown in the diagram – can only be obtained for the deflection angle $\beta = 0°$. A synchronous or homokinematic running can be achieved by a suitable combination or connection of two or more joints.

© Spicer Gelenkwellenbau GmbH

Technical instructions for application

2. The driveshaft
The rotation angle difference φ_K or the gimbal error of a deflected universal joint can be offset under certain installation conditions with a second universal joint.

The constructive solutions are the following:

1. The deflection angles of both joints must be equal (i.e., $\beta_1 = \beta_2$)

Two arrangements are possible:

1a) **Z**-deflection

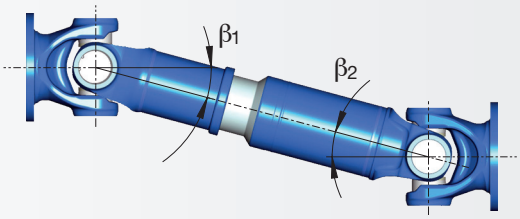

1b) **W**- or **M**-deflection

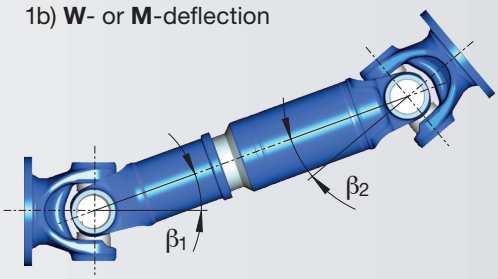

2. The two joints must have a kinematic angular relationship of 90° (π/2), (i.e., the yokes of the connecting shaft are in one plane).

For a more intensive study of universal shaft kinematics, please refer to the VDI-recommendation 2722 and to the relevant technical literature.

Operating angles

The most common arrangements are the Z- and W-deflections. To begin, consider the system in which the shafts to be connected are in the same plane.

Z-arrangement

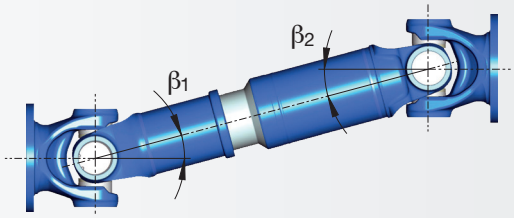

W-arrangement

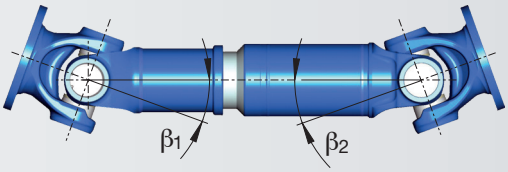

Maximum permissible angle difference
The condition $\beta_1 = \beta_2$ is one of the essential requirements for a uniform output speed condition and cannot always be fulfilled. Therefore, designers and engineers will often ask for the permissible difference between the deflection angles of both joints.

The deflection angles for high-torque and high-speed machine drives should be equal. If not, the difference should be limited to 1° to 1,5°.

© Spicer Gelenkwellenbau GmbH

Technical instructions for application

Product of speed and deflection angle

Greater differences of about 3° to 5° are acceptable without disadvantages in low-speed applications. For applications with varying deflection conditions, it is important to obtain uniformity, if possible over the complete deflection range.

Deflection in two planes means that the deflection is both horizontal and vertical. The combination of two identical types of deflection (Z/Z or W/W) and identical deflection angles ensure uniformity. For a combination of Z- and W-deflection, the inner yokes must be offset. Please consult with Dana application engineers to determine the proper amount of angular offset.

Determination of the maximum permissible operating deflection angle β

Depending on the driveshaft series, the maximum deflection angle per joint is β = 5° to 44°. Due to the kinematic conditions of the cardan joint, as described before, the deflection angle must be limited in relation to the speed.

Calculations and observations of many applications have shown that certain mass acceleration torques of the center part must not be exceeded in order to guarantee smooth running of the drive systems. This acceleration torque depends on the

$$D = n \cdot \beta$$

and the moment of inertia of the middle part of the shaft.

The parameter D is proportional to the angular acceleration of the driveshaft center part $\mathcal{E}_2$.

$$\mathcal{E}_2 \sim D = n \cdot \beta$$

n = Operating speed [rpm]
β = Deflection angle of joint [∡°]
$\mathcal{E}_2$ = Angular acceleration of driveshaft center part

The maximum permissible deflection angle at a given speed and an average driveshaft length can be determined from the following diagram.

For an exact determination, contact Dana.

© Spicer Gelenkwellenbau GmbH

Technical instructions for application

Limits for the product of operating speed and deflection angle

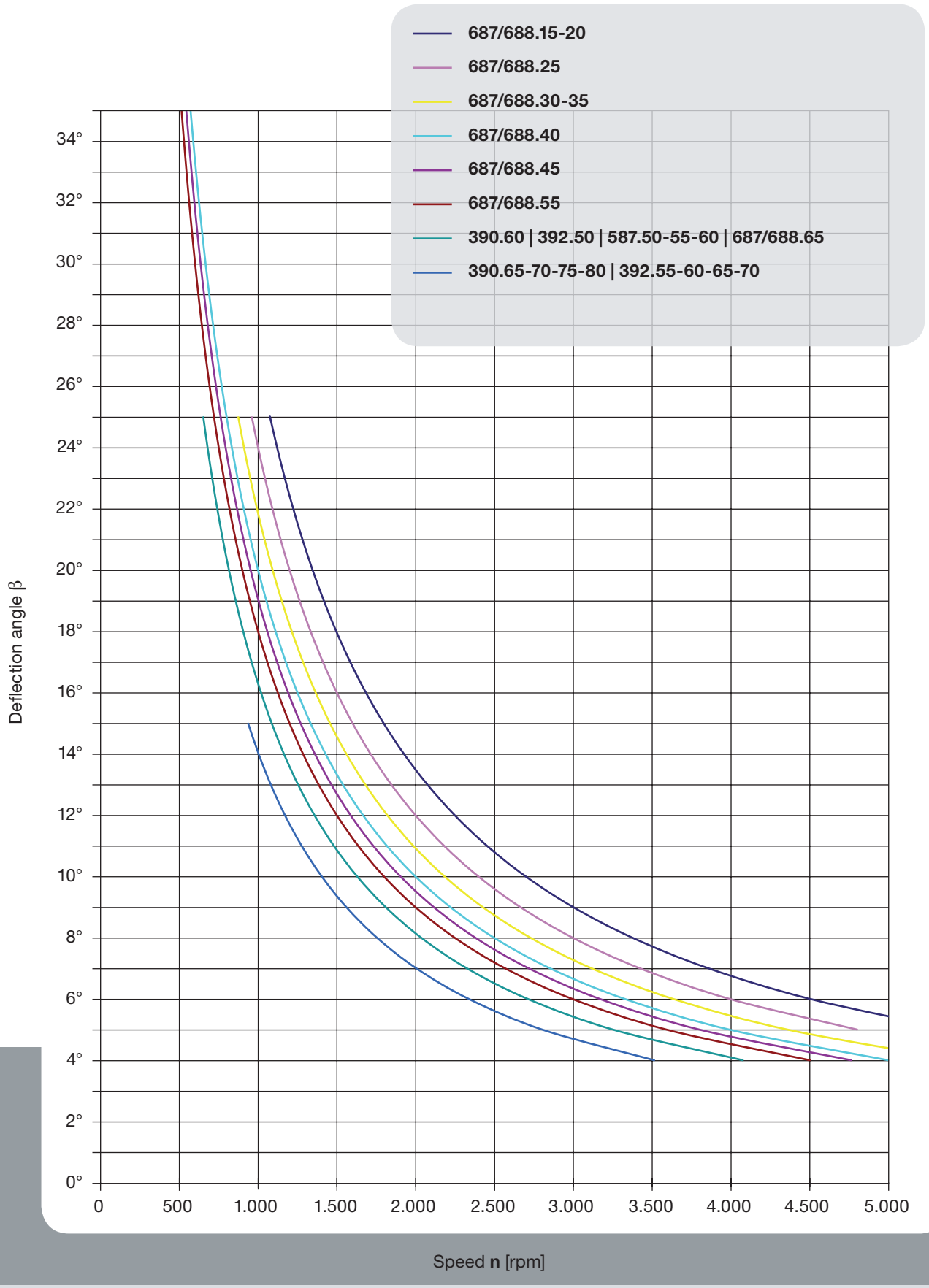

© Spicer Gelenkwellenbau GmbH

Technical instructions for application

Speed

Checking the critical torsional speed
The plant or vehicle manufacturer has to prevent the use of driveshafts within the critical torsional speed ranges of the drive. Therefore, the determination of the critical torsional speed ranges of the drive system is required. The values for the moment of inertia and torsional stiffness of the selected driveshaft can be taken from the data sheets or be supplied upon request.

Checking the critical bending speed
Except for short and rigid designs, driveshafts are flexible units with critical bending speeds and flexural vibrations that have to be checked. To accomplish this, the first and possibly second order critical bending speeds are important.

For safety reasons, the maximum permissible operating speed must be at a sufficient distance from the critical bending speed.

$n_{perm.\ max.} \simeq 0.7 \cdot n_{crit.}$ [rpm]

The critical bending speed for a particular shaft size is determined by the length and the tube diameter only (see diagram). For greater length dimensions, the tube diameter has to be increased.

The diameter is limited because of the ratio to the shaft size. Therefore, single driveshafts can only be provided up to a certain length. All installations exceeding this limit have to be equipped with subdivided drive lines.

For determination of the critical bending speed, see the following selection diagrams.

These diagrams only apply to driveshafts that are installed with solid bearing supports located close to the flange.

Different installations (e.g., units with elastic mounting bearing) must have lower critical bending speeds.

Depending on the type of the plant, excitations of second order can cause flexible vibrations. Please contact Dana engineers if the deflection angle exceeds 3° and for greater length dimensions.

© Spicer Gelenkwellenbau GmbH

Technical instructions for application

Series 687/688

Determination of the critical bending speed depending on the respective operating length

- 687/688.15 - 63,5 x 2,4
- 687/688.20 - 76,2 x 2,4
- 687/688.25 - 89 x 2,4
  687/688.30 - 90 x 3
- 687/688.35 - 100 x 3
- 687/688.40 - 100 x 4,5
- 687/688.40 - 120 x 3
  687/688.45 - 120 x 4
  687/688.55 - 120 x 6
- 687/688.45 - 110 x 5
- 687/688.65 - 142 x 6

Example: 687.15 – 63,5 x 2,4
Joint size 687.15
Tube outer diameter 63,5 mm
Wall thickness 2,4 mm

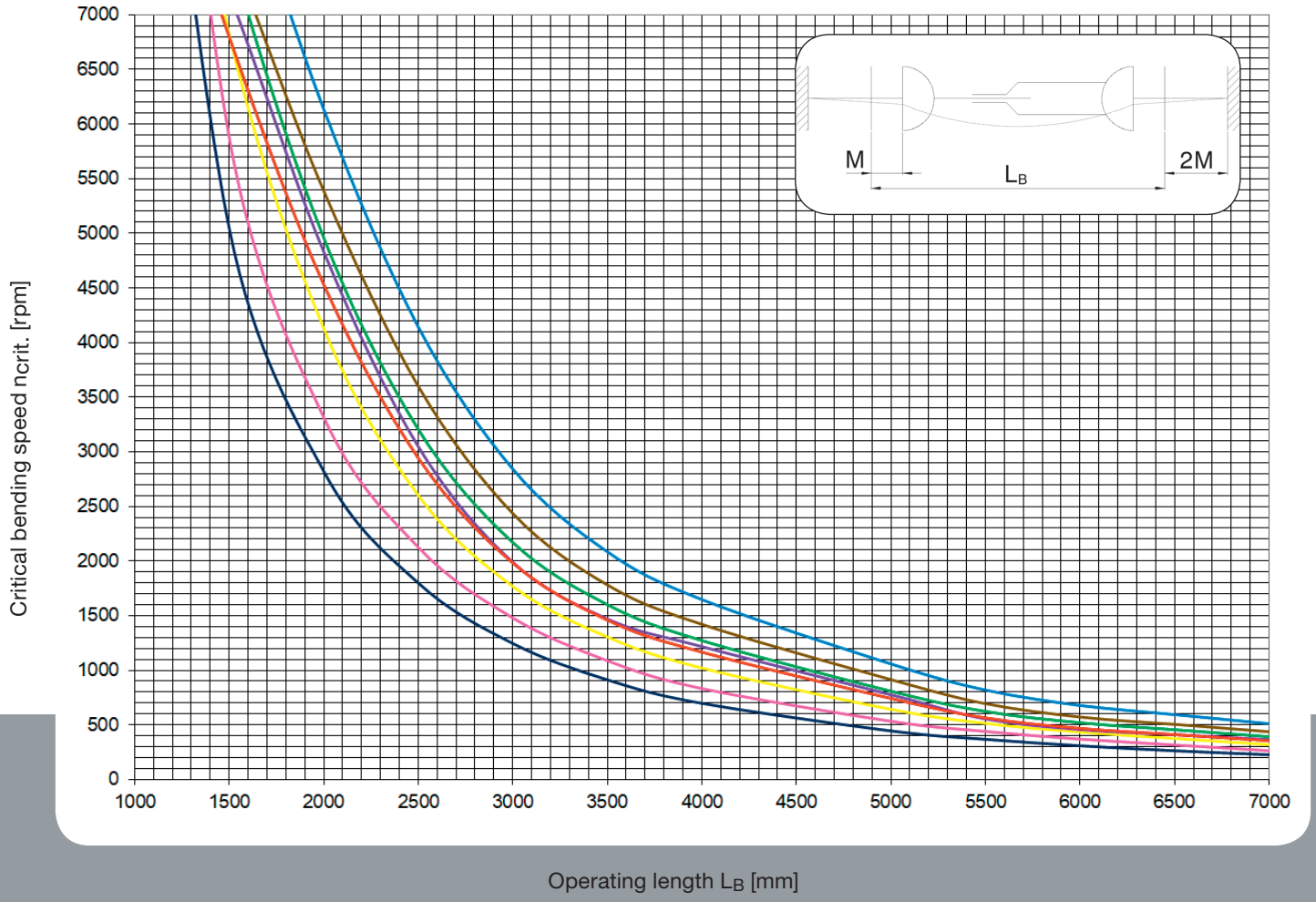

© Spicer Gelenkwellenbau GmbH

Technical instructions for application

Series 587/390/392

Determination of the critical bending speed depending on the respective operating length

- 587.50 - 144 x 7
- 587.55/587.60 - 167,7 x 9,8
  392.50/390.60 - 167,7 x 9,8
- 392.55/390.65 - 218,2 x 8,7
- 392.60/390.70 - 219 x 13,3
- 392.65/390.75 - 273 x 11,6
- 392.70/390.80 - 273 x 19

Example: 390.60 – 167,7 x 9,8
Joint size 390.60
Tube outer diameter 167,7 mm
Wall thickness 9,8 mm

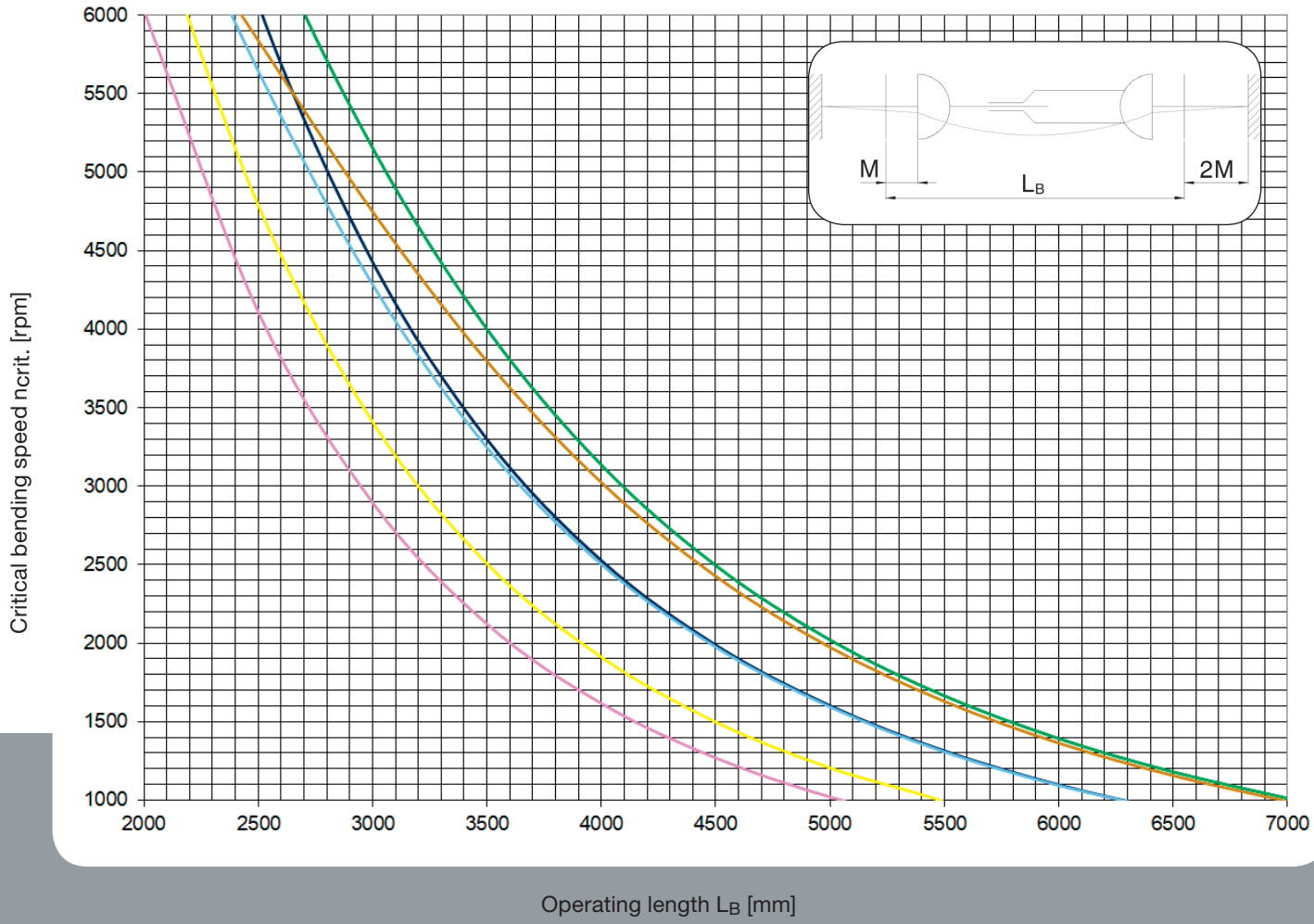

© Spicer Gelenkwellenbau GmbH

Technical instructions for application

Length dimensions

The operating length of a driveshaft is determined by:

- the distance between the driving and the driven units
- the length compensation during operation

The following abbreviations are used:

L_z = Compressed length
This is the shortest length of the shaft. A further compression is not possible.
L_a = Length compensation
The driveshaft can be expanded by this amount. An expansion beyond that dimension is not permissible.
$L_z + L_a$ = Maximum permissible operating length L_{Bmax}.

During operation, the driveshaft can be expanded up to this length. The optimum working length L_B of a driveshaft is achieved if the length compensation is extracted by one-third of its length.

$$L_B = L_z + \frac{1}{3} L_a \quad [mm]$$

This general rule applies to most of the arrangements. For applications where larger length alterations are expected, the operating length should be chosen in such a way that the movement will be within the limit of the permissible length compensation.

Arrangements of driveshafts
A tandem arrangement of driveshafts could become necessary to cope with greater installation lengths.

Basic forms of shaft combinations:

Driveshaft with intermediate shaft

Driveshaft with two intermediate shafts

Two driveshafts with double intermediate bearing

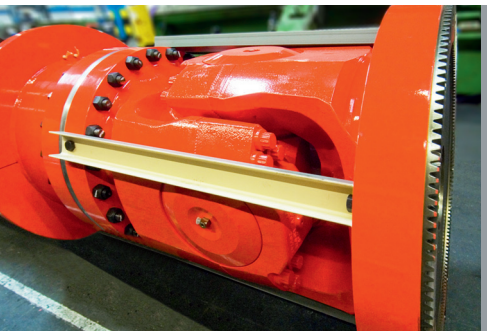

© Spicer Gelenkwellenbau GmbH

Technical instructions for application

In such arrangements, the individual yoke positions and deflection angles should be adjusted with regard to one another in such a way that the degree of non-uniformity (see General theoretical instructions) and the reaction forces acting on the connection bearings (see Technical instructions for application) are minimized.

Load on bearings of the connected units

Axial forces

For the design of a driveshaft, it must be taken into account that axial forces can occur. These forces must be absorbed by axial thrust bearings of the connected units.

Axial forces will occur during length variations in the driveshaft. Additional axial forces are caused by increasing torque and by increasing pressure during lubrication of the splines. These forces will decrease automatically and can be accelerated by the installation of a relief valve.

The axial force A_k is a combination of two components:

1. Frictional force F_{RL}

This is the force that occurs in the length compensation. It can be determined from:

$$F_{RL} = T \cdot \frac{\mu}{r_m} \cdot \cos \beta$$

F_{RL} = Frictional force from the length compensation [N]

It depends on:

T = Torque of the driveshaft [Nm]

r_m = Pitch circle radius in the sliding parts of the driveshaft [m]

μ = Friction coefficient (depends on spline treatment):

- 0,08 for plastic-coated splines
- 0,11 for steel/steel (greased)

β = Operating deflection angle

2. Power F_p

This force occurs in the length compensation due to the increasing pressure in the lubrication grooves of the driveshaft.

The force depends on the lubrication pressure (maximum permissible pressure is 15 bar).

Dana's environmental protection management policy

An important feature of Dana's environmental protection management policy is dedication to product responsibility. Because of this commitment, the effect of driveshafts on the environment is given considerable attention. GWB™ driveshafts are lubricated with lead-free grease, their paint finishes are low in solvents and free of heavy metals, and they are easy to maintain. After use, they can be introduced into the recycling process.

© Spicer Gelenkwellenbau GmbH

Technical instructions for application

Calculation scheme of radial forces on connecting bearings

Driveshaft in Z-arrangement
Position 0°, flange yoke right-angled to drawing plane, Position π/2, flange yoke in drawing plane

Driveshaft in W-arrangement
Position 0°, flange yoke right-angled to drawing plane, Position π/2, flange yoke in drawing plane

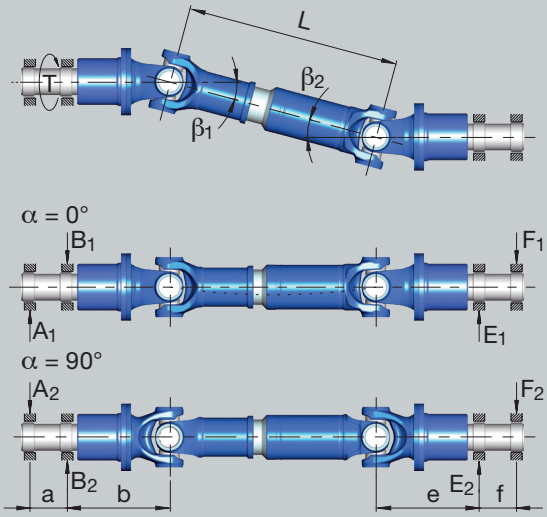

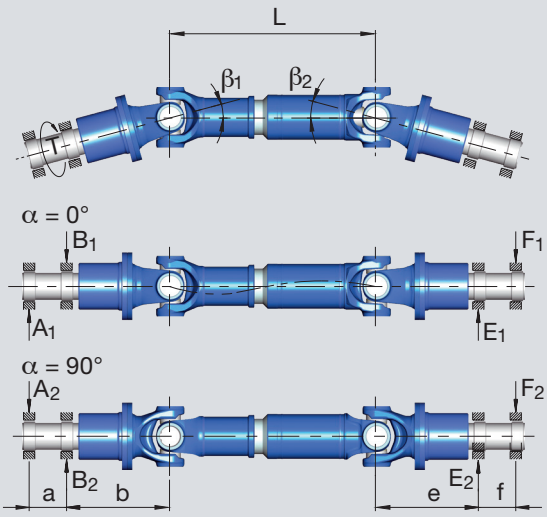

$\alpha = 0°$ $\quad A_1 = T \cdot \frac{\cos\beta_1 \cdot b}{L \cdot a} \cdot (\tan\beta_1 - \tan\beta_2)$

$B_1 = T \cdot \frac{\cos\beta_1 (a + b)}{L \cdot a} \cdot (\tan\beta_1 - \tan\beta_2)$

$F_1 = T \cdot \frac{\cos\beta_1 \cdot e}{L \cdot f} \cdot (\tan\beta_1 - \tan\beta_2)$

$E_1 = T \cdot \frac{\cos\beta_1 \cdot (e + f)}{L \cdot f} \cdot (\tan\beta_1 - \tan\beta_2)$

$\alpha = \pi/2 = 90°$ $\quad A_2 = B_2 = T \cdot \frac{\tan\beta_1}{a}$

$F_2 = E_2 = T \cdot \frac{\sin\beta_2}{f \cdot \cos\beta_1}$

$\alpha = 0°$ $\quad A_1 = T \cdot \frac{\cos\beta_1 \cdot b}{L \cdot a} \cdot (\tan\beta_1 + \tan\beta_2)$

$B_1 = T \cdot \frac{\cos\beta_1 (a + b)}{L \cdot a} \cdot (\tan\beta_1 + \tan\beta_2)$

$F_1 = T \cdot \frac{\cos\beta_1 \cdot e}{L \cdot f} \cdot (\tan\beta_1 + \tan\beta_2)$

$E_1 = T \cdot \frac{\cos\beta_1 \cdot (e + f)}{L \cdot f} \cdot (\tan\beta_1 + \tan\beta_2)$

$\alpha = \pi/2 = 90°$ $\quad A_2 = B_2 = T \cdot \frac{\tan\beta_1}{a}$

$F_2 = E_2 = T \cdot \frac{\sin\beta_2}{f \cdot \cos\beta_1}$

Driveshaft arrangement with equal deflection angles and equal bearing distances

$\beta_1 = \beta_2$
$a = f,\ b = e$

$\alpha = 0°$ $\quad A_1 = F_1 = B_1 = E_1 = 0$

$\alpha = \pi/2 = 90°$ $\quad A_2 = B_2 = T \cdot \frac{\tan\beta_1}{a}$

$F_2 = E_2 = T \cdot \frac{\tan\beta_1}{a}$

Driveshaft arrangement with equal deflection angles and equal bearing distances

$\beta_1 = \beta_2$
$a = f,\ b = e$

$\alpha = 0°$ $\quad A_1 = F_1 = 2T \cdot \frac{\sin\beta_1 \cdot b}{L \cdot a}$

$B_1 = E_1 = 2T \cdot \frac{\sin\beta_1 (a + b)}{L \cdot a}$

$\alpha = \pi/2 = 90°$ $\quad$ See Z-arrangement $\alpha = \pi/2$

© Spicer Gelenkwellenbau GmbH

Technical instructions for application

Balancing of driveshafts

The balancing of driveshafts is performed to equalize eccentrically running masses, therefore preventing vibrations and reducing the load on any connected equipment.

Balancing is carried out in accordance with ISO Standard 1940, “Balance quality of rotating rigid bodies”. According to this standard, the permissible residual unbalance is dependent on the operating speed and mass of the balanced components.

Dana’s experience has shown that balancing is not normally required for rotational speeds below 500 rpm. In individual cases, this range may be extended or reduced, depending on the overall drivetrain characteristics.

Driveshafts are balanced in two planes, normally to a balancing accuracy between G16 and G40.

- **Balancing speed**
  The balancing speed is normally the maximum speed of the system or vehicle.

- **Quality grade**
  In defining a quality grade, it is necessary to consider the reproducibility levels achievable in the customer’s own test rig during verification testing. Quality grades are dependent on the following variables:
  - Type of balancing machine (hard, rigid or soft suspension)
  - Accuracy of the measuring system
  - Mounting tolerances
  - Joint bearing radial and axial play
  - Angular backlash in longitudinal displacement direction

Field analyses have shown that the sum of these factors may result in inaccuracies of up to 100 %. This observation has given rise to the definition of the following balancing quality grades:

- Producer balancing: G16
- Customer verification tests: G32

G 40	Car wheels, wheel rims, wheel sets, **driveshafts** Crankshaft/drives of elastically mounted, fast four-cycle Engines (gasoline or diesel) with six or more cylinders Crankshaft/drives of engines of cars, trucks, and locomotives
G 16	**Driveshafts** (propeller shafts, cardan shafts) with special requirements Parts of crushing machines and agricultural machinery Individual components of engines (gasoline or diesel) for cars, trucks, and locomotives Crankshaft/drives of engines with six or more cylinders under special requirements
G 6,3	Parts of process plant machines Marine main turbine gears (merchant service) Fans, flywheels, centrifuge drums Paper machinery rolls, print rolls Assembled aircraft gas turbine rotors Pump impellers
G 2,5	Gas and steam turbines, including marine main turbines (merchant service) Rigid turbo-generator rotors Turbo-compressors, turbine-driven pumps Machine tool drives Computer memory drums and discs

Extract from DIN ISO 1940/Part 1

© Spicer Gelenkwellenbau GmbH

Selection of GWB™ driveshafts

The design of driveshafts must exclude all possible danger to people and material by secured calculation and test results, as well as other suitable steps (see Installation and Maintenance/Safety Instructions).

The selection procedure described on these pages is only a general recommendation. Please consult Dana engineers for the final design for your application.

The selection of a driveshaft should be based on the following conditions:

1. **Specifications of driveshafts**
2. **Selection by bearing life**
3. **Operational dependability**
4. **Operating angles**
5. **Speed**
6. **Length dimensions**
7. **Load on bearings of the connected units**

1. Specifications of driveshafts

T_{CS} = Functional limit torque [Nm]
Up to this maximum permissible torque, a load may be applied to a driveshaft for a limited frequency without the working capability being affected by permanent deformation of any driveshaft functional area. This does not result in any unpermissible effect on bearing life.

Yield torque
This torque level leads to irreversible plastic deformation of the driveshaft which could result in a failure of the complete drive system.

T_{DW} = Reversing fatigue torque [Nm]
At this torque, the driveshaft is permanently solid at alternating loads. The values for driveshafts of series 687/688 with welded balancing plates are lower. With a fatigue torque of this order, the transmission capacity of the flange connection must be checked.

T_{DSch} = Pulsating fatigue torque [Nm]
At this torque, the driveshaft is permanently solid at pulsating loads.

$T_{DSch} = 1{,}4 \cdot T_{DW}$

L_C = Bearing capacity factor
The bearing capacity factor takes into consideration the dynamic service life C_{dyn} (see DIN/ISO 281) of the bearings and the joint geometry R. The L_C values for the different shaft sizes are shown in the tables (see data sheets).

When selecting driveshafts, the bearing life and the operating strength must be considered separately. According to the load state, the reversing fatigue torque T_{DW} or the pulsating fatigue torque T_{DSch} must also be taken into consideration.

© Spicer Gelenkwellenbau GmbH

Selection of GWB™ driveshafts

2. Selection by bearing life

By bearing capacity factor L_C
The bearing life L_h of a driveshaft depends on the bearing capacity factor L_C and is based on the following formula:

$$L_h = \frac{L_C \cdot 10^{10}}{n \cdot \beta \cdot T^{10/3} \cdot K_1}$$

If the desired bearing life L_h is given, the joint size can be calculated by the bearing capacity factor L_C.

$$L_C = \frac{L_h \cdot n \cdot \beta \cdot T^{10/3} \cdot K_1}{10^{10}}$$

The L_C values can be taken from the tables (see data sheets).

L_C = Bearing capacity factor
n = Operating speed [rpm]
β = Operating deflection angle [∢°]
T = Operating torque [kNm]
K_1 = Shock factor

If operating data are based on a duty cycle, a more precise durability can be calculated.

Drives with internal combustion engines may cause torque peaks that must be considered by factor K_1.

Electric motor/turbine	K_1 = 1,00
Gasoline engine	
4 cylinder and more	K_1 = 1,15
Diesel engine	
4 cylinder and more	K_1 = 1,20

The values shown in the tables are general values. If a flexible coupling is used, the shock factor is lower. Principally the data of the motor and/or coupling manufacturer must be observed.

3. Operating dependability

The operating dependability can be determined if a certain duty cycle is given. The calculated service life of a driveshaft under normal working conditions has to achieve or exceed the required service life.

Duty cycles are often not available. In such cases, Dana engineers will make use for almost 70 years of experience as a manufacturer of driveshafts to provide an optimal selection.

Calculations are based on the peak torque T and the maximum peak torque T_{SP} that may occur. The peak torque is determined according to the type of operation and the torque characteristic. It should be lower than the corresponding torques T_{DSch} and T_{DW}.

$$T_N \cdot K = T < T_{DSch} \text{ or } T_{DW}$$

© Spicer Gelenkwellenbau GmbH

Selection of GWB™ driveshafts

Typical types of torques:

Pulsating stress

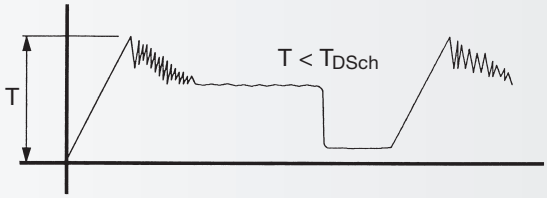

Alternating stress

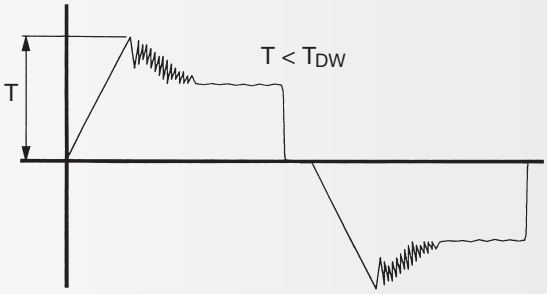

The maximum peak torque T_{SP} is the extremely rarely occuring torque of the system (crash, emergency case).

This maximum torque (T_{SP}) should not exceed the functional limited torque T_{CS} of the drive-shaft.

$T_{SP} < T_{CS}$

T_{SP} =	Maximum peak torque	[Nm]
T_N =	Nominal torque	[Nm]
T_{CS} =	Functional limit torque of the driveshaft (see data sheets)	[Nm]

Service factor K

The service factors shown in the following tables should be used as approximate values only.

Light shock load: K = 1,1 – 1,5
Driven machines

Centrifugal pumps
Generators (continuous load)
Conveyors (continuous load)
Small ventilators
Machine tools
Printing machines

Medium shock load: K = 1,5 – 2
Driven machines

Centrifugal pumps
Generators (non-continuous load)
Conveyors (non-continuous load)
Medium ventilators
Wood handling machines
Small paper and textile machines
Pumps (multi-cylinder)
Compressors (multi-cylinder)
Road and bar mills
Locomotive primary drives

Heavy shock load: K = 2 – 3
Driven machines

Large ventilators
Marine transmissions
Calender drives
Transport roller tables
Small pinch rolls
Small tube mills
Heavy paper and textile machines
Compressors (single-cylinder)
Pumps (single-cylinder)

Heavy shock load: K = 2 – 3
Driven machines

Mixers
Bucket wheel reclaimers
Bending machines
Presses
Rotary drilling rigs
Locomotive secondary drives
Continuous casters
Crane drives

Extra-heavy shock load: K = 3 – 5
Driven machines

Continuous working roller tables
Medium section mills
Continuous slabbing and blooming mills
Continuous heavy tube mills
Reversing working roller tables
Vibration conveyors
Scale breakers
Straightening machines
Cold rolling mills
Reeling drives
Blooming stands

Extreme shock load: K = 5 – 10
Driven machines

Feed roller drives
Wrapper roll drives
Plate-shears
Reversing slabbing and blooming mills

© Spicer Gelenkwellenbau GmbH

Additional information and ordering instructions

Selection of driveshafts

The selection of a GWB™ driveshaft ist determined not only by the maximum permissible torque of the shaft and the connections but also by a variety of other factors.

For the exact determination and selection of driveshafts, see the Selection of Driveshafts pages in this brochure.

Dana engineers can precisely calculate the correct size of the shaft and joint for your application with the use of computer programs created specifically for this purpose.

In order to best match your requirements, you'll be asked to provide the following information:

- Installation length of the driveshaft
- Maximum joint angle requirement
- Required length compensation
- Maximum rotation speed of the shaft
- Shaft end connection details
- Maximum torque to be transmitted
- Nominal torque to be transmitted
- Load occurrences
- Description of the equipment and working conditions

Specific applications

Driveshafts in railway transmissions
The selection of driveshafts in the secondary system of railway vehicles must be based on the maximum torque that can be transmitted to the track (wheel slip or adhesion torque).

Driveshafts in crane travel drives
The particular operating conditions for travel drives of cranes have been taken into consideration in the DIN-standard 15 450. As a result, driveshafts for these applications can be selected by using that standard.

Driveshafts in marine transmissions
These driveshafts are subject to acceptance and must correspond to the standards of the respective classification society.

Driveshafts for other forms of passenger conveyance
Driveshafts used in amusement park equipment, ski lifts or similar lift systems, elevators, and rail vehicles must be in accordance with the standards and specifications of the appropriate licensing and supervisory authorities.

Driveshafts in explosive environments (Atex-outline)
For the use of driveshafts in areas with danger of explosion, an EU-conformity certificate acc. to EU-outline 2014/34/EU can be provided.
The possible categories for the product „driveshaft" are:

a) in general:
CE Ex II 3G Ex h IIB T6 Gc
CE Ex II 3D Ex h IIIC T85°C Dc
b) for driveshafts with adapted features:
CE Ex II 2G Ex h IIB T6 Gc
CE Ex II 2D Ex h IIIC T85°C Dc

The driveshaft should not be used under the following operating conditions:

- Within the critical bending speed range of the drive
- Within the critical torsional speed range of the drive
- At operating angles which exceed the specified maximum (refer to drawing confirmed with order)
- At dynamic and static operating torques which exceed the specified limit (refer to drawing confirmed with order)
- At speed x deflection angle (n x β) conditions which exceed the limit (refer to GWB catalogue)
- For usage time which exceeds the calculated bearing lifetime of the joint bearings

If you'd like more information on GWB driveshafts, or would like to discuss specific application requirements with an engineer, please call Dana at 00 49 (0) 201 - 81 24 - 0 or visit www.gwbdriveshaft.com, www.dana.com.

© Spicer Gelenkwellenbau GmbH

After-sales service

Home Country

Spicer Gelenkwellenbau GmbH
2. Schnieringstraße 49
Post office box 101362
45013 Essen
Germany
Phone: +49 (0) 201-81 24-0
E-mail: industrial@dana.com
Web: www.gwbdriveshaft.com
www.dana.com

Service Centre Hamburg
Off-Highway Powertrain Services
Germany GmbH
Ottensener Straße 150
22525 Hamburg
Germany
Phone: +49 (0) 40 5400 900
E-mail: customerservice.hamburg@walterscheid.com

Foreign Country

Argentina
Chilicote S.A.
Avda. Julio A. Roca 546
C1067ABN - Buenos Aires
Argentina
Phone: +54 11 43 31 66 10
E-mail: chilicote@chilicote.com.ar
Also responsible for Uruguay and Chile.

Australia
Dana SAC Australia Pty Ltd
149 Gilba Road Girraween NSW 2145
Australia
Phone: +61 28848000
E-mail: nswsales.dbau@dana.com

Dana Australia Pty Ltd
8 Hudson Court
Keysborough VIC 3173
Australia
Phone: +61 3 8779 8500
E-mail: Aus.Spicer@dana.com

Hardy Spicer Company P/L
17-31 Discovery Road
Dandenong South, Victoria 3175
Australia
Phone: +61 3 97 941 900
E-mail: russell.plowman@hardyspicer.com.au
E-mail: hspicer@hardyspicer.com.au

Austria
Service Centre Vienna
Powertrain Services Austria GmbH
Slamastrase 32
1230 Wien
Austria
Phone: +43 (0) 1616 38 800
E-mail: service.austria@walterscheid.com

Belgium
Service Centre Sint-Truiden
Powertrain Services Benelux BV
Groenstraat 5920, bus 2
3800 Sint-Truiden
Belgium
Phone: +32 (0) 11 59 02 60
E-mail: service.belgium@walterscheid.com

Brazil
Dana SAC South América Indústria e Comércio de Transmissões Ltda Indústrias Ltda.
Via Prefeito Jurandyr Paixão, 1900 - Mailbox 4011
Zip code: 13487-970
Limeira - SP
Brasil
Phone: +55 19 3446 8600
E-mail: vendas@gwbcardans.com.br
Tiago Goldner
Phone: +55 19 3446 8602
Mobile: +55 19 8137 8791
E-mail: tiago.goldner@dana.com

China / P.R.C.
Dana China Shanghai Office
7F, Tower B, Hongwell International Plaza
No. 1602 Zhongshan Road West
Xuhui District, Shanghai
China
Phone: +86 21 333 250 00
E-mail: shao.cheng@dana.com

Denmark
Service Centre Kobenhavn
Powertrain Services Scandinavia AB
Baldershöj 11 A+B
2635 Ishöj
Denmark
Phone: +45 (0) 44 86 68 44
E-mail: service.denmark@walterscheid.com

Finland
Oy UNILINK Ab
Melkonkatu 24
00210 Helsinki
Finland
Phone: +358 (0) 9 6866 170
E-mail: unilink@unilink.fi
Web: www.unilink.fi

France
Service Centre Paris
Powertrain Services France SA
8 Rue Panhard et Levassor
78570 Chanteloup les Vignes
France
Phone: +33 (0) 130 068 400
E-mail: service.france@walterscheid.com

Great Britain
Dana SAC UK
Kestrel Court
Centre Park
Warrington
WA1 1QX
Great Britain
Phone: +44 (0) 1925 636 682
E-mail: sales.breviniuk@dana.com
Web: www.dana-sac.co.uk

Service Centre Leek
Powertrain Services UK Limited
Higher Woodcroft
Leek
Staffordshire ST13 5QF
Great Britain
Phone: +44 (0) 153 838 42 78
E-mail: service.uk@walterscheid.com

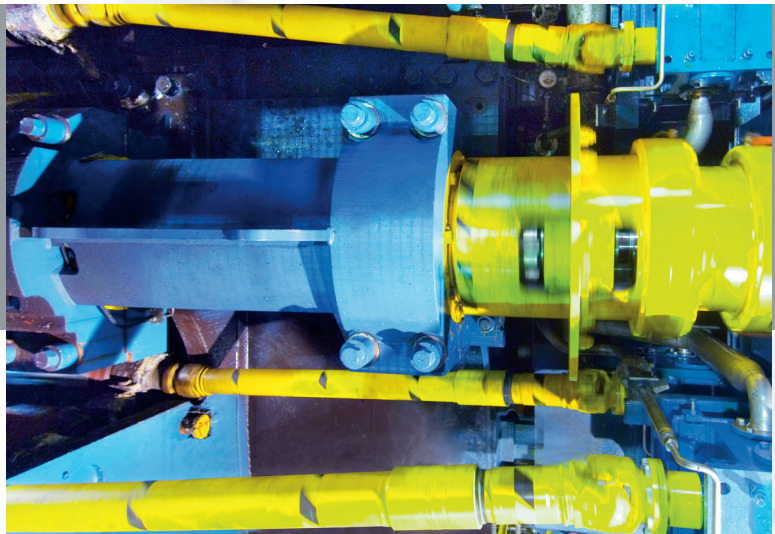

© Spicer Gelenkwellenbau GmbH

Greece
Hellas Cardan GmbH
Strofi Oreokastrou
56430 Thessaloniki
Greece
Phone: +30 2310 682 702
E-mail: hecardan@otenet.gr

India
Dana India Private Limited
Survey No. 278, Raisoni Industrial Park, Phase II,
Hinjewadi, Village-Mann, Tal. Mulshi,
Pune-411 057
India
Phone: +91 9948572000
E-mail: koteswara.rao@dana.com

Indonesia
PT. Tekno Fluida Indonesia
Kawasan Multiguna - Taman Tekno BSD
Sektor XI Blok H2 No. 3A - BSD City
Tangerang 15314
Indonesia
Phone: + 62 21 75876580
Contact Antoni Sutiono:
E-mail: antoni.sutiono@teknofluida.com
Contact Jan Pieter Sinaga:
E-mail: jan.pieter@teknofluida.com
Web: www.teknofluida.id

Italy
Dana Motion Systems Italia S.r.l.
Via Luciano Brevini1/A
42124 Reggio Emilia (RE)
Italy
Phone: +39 0522 9281
E-mail: dana.re@dana.com

Service Centre Milano
Powertrain Services Italy SpA
Via G. Ferraris 125/C
20021 Bollate, Milano
Italy
Phone: +39 02 38 33 81
E-mail: service.italia@walterscheid.com

Netherlands
Powertrain Services Benelux B.V.
A. Hofmanweg 2A
2031 BH Haarlem
Netherlands
Phone: +31 23 3033700
E-mail: service.netherlands@walterscheid.com

Norway
Dana SAC Norway AS
Dana Incorporated
Elveveien 38
3262 Larvik
Norwegen
Phone: +47 33 11 71 00
E-mail: BreviniNO.brevini@dana.com
Web: www.dana-industrial.com/sac-norway/

Service Centre Oslo
Powertrain Services Scandinavia AB
Karihaugveien 102
1086 Oslo
Norway
Phone: +47 23 286 810
E-mail: service.norway@walterscheid.com

Poland
Cardan Polska Sp. z o.o.
ul. Poznanska 13A
Sady k. Poznania
62-080 Tarnowo Podgórne
Poland
Phone: +48 61 847 70 01
Mobil: +48 606 44 99 44
E-mail: biuro@cardanpolska.com

Russia-Ukraine
APA-KANDT GmbH
Weidestraße 122c
22083 Hamburg
Germany
Phone: +49 40 48 061 438
E-mail: office@apa-kandt.de
Web: www.apa-kandt.de

Singapore-Asia Pacific
Dana SAC S.E. Asia Pte Ltd
Dana Incorporated
8B Buroh Street 3rd floor
Singapore 627532
Phone: +65 6356 8922
E-mail: sales.singapore@dana.com

South Africa
Driveline Technologies (Pty) Ltd.
CNR. Derrick & Newton Roads
Spartan, Kempton Park
P.O. Box 2649
Kempton Park 1620
South Africa
Phone: +27 11 929 56 00
Fax: +27 (0) 86 212 9256
E-mail: richard@driveline.co.za

South Korea
Dana Incorporated Korea
11F Vision Tower, 312 Teheran-ro,
Gangnam-gu, Seoul, 06211,
Korea
Phone : +82 (0)2 3483 6409
Mobil: +82 (0)10 4355 9812
E-mail: willy.cho@dana.com

Spain
Gelenk Industrial S.A.
Balmes, 152
08008 Barcelona
Spain
Phone: +349 3 23 74 245
E-mail: javier.montoya@gelenkindustrial.com

Service Centre Madrid
Off-Highway Powertrain Service Spain
Sociedad Limitada
Calle Garzas 10A
28320 Pinto
Spain
Phone: +34 91 690 95 77
E-mail: service.spain@walterscheid.com

Sweden
Powertrain Services
Scandinavia AB
Alfred Nobels Allé 110
14648 Tullinge
Sweden
Phone: +46 8 603 97 00
E-mail: service.sweden@walterscheid.com

Switzerland
Service Centre Regensdorf
Off-Highway Powertrain Services
Germany GmbH
Althardstrase 141
8105 Regensdorf (Zurich)
Switzerland
Phone: +41 (0) 44 87 16 070
E-mail: service.switzerland@walterscheid.com

USA, Canada
Dana Incorporated - Aftermarket Group
PO Box 1000
Maumee, OH 43537
USA
Phone: +1 419 887 5216
E-mail: Tom.DeHaven@dana.com
E-mail: spicerindustrial@dana.com

Copyright by Spicer Gelenkwellenbau GmbH
All rights reserved.
Any reproduction of this publication or parts thereof is subject to the explicit authorization of the copyright-holder.
This catalogue supersedes all former editions.
We reserve the right to make alterations.
Release 05/2022

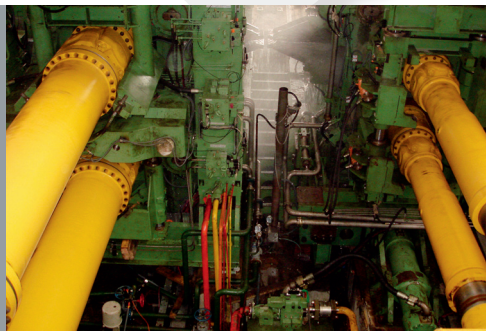

© Spicer Gelenkwellenbau GmbH

Dana
About Dana Incorporated

Dana is a world leader in providing power-conveyance and energy-management solutions that are engineered to improve the efficiency, performance, and sustainability of light vehicles, commercial vehicles, and off-highway equipment. Enabling the propulsion of conventional, hybrid, and electric-powered vehicles, Dana equips its customers with critical drive and motion systems; electrodynamic technologies; and thermal, sealing, and digital solutions.

About GWB™

Since 1946, Dana brand GWB has led the market in heavy-duty, industrial drive shafts and genuine service parts for the scrap steel, construction, railway, marine and paper industries. Manufacturing and assembly operations located in Germany are supported by Dana's global network of R&D and distribution facilities. Introduced at a later date, GWB pioneered maintenance-free drive shafts, consolidating their status as market leader.
High-performance solutions for major original equipment manufacturers, as well as aftermarket customers worldwide, ensure first-rate technical innovation, quality performance, reliability and flexibility.

© 2022 Dana Limited

Trains

Industrial plants

Ships

Spicer Gelenkwellenbau GmbH
2. Schnieringstraße 49
45329 Essen/Germany

Phone: 00 49 (0) 201 - 81 24 - 0
Fax: 00 49 (0) 201 - 81 24 - 652

www.gwbdriveshaft.com
www.dana.com

APPLICATION POLICY
Capacity ratings, features, and specifications vary depending upon the model and type of service. Application approvals must be obtained from Dana. We reserve the right to change or modify our product specifications, configurations, or dimensions at any time without notice.

© Spicer Gelenkwellenbau GmbH